T.O. No. 16-30CPS6-8

PARTS CATALOG

TRANSMITTER-RECEIVER SYSTEM COMPONENTS

RADAR SET AN/CPS-6B

THIS PUBLICATION REPLACES T.O. No. 16–30CPS6–8 DATED 16 JANUARY 1950

PUBLISHED UNDER AUTHORITY OF THE SECRETARY OF THE AIR FORCE

NOTICE: This document contains information affecting the national defense of the United States within the meaning of the Espionage Laws, Title 18 U.S.C., Sections 793 and 794. Its transmission or the revelation of its contents in any manner to an unauthorized person is prohibited by law.

Dunlap Printing Co., Phila., Pa.—2400-10-53

20 APRIL 1953

Reproduction for non-military use of the information or illustrations contained in this publication is not permitted without specific approval of the issuing service (BuAer or USAF). The policy for use of Classified Publications is established for the Air Force in AFR 205–1 and for the Navy in Navy Regulations, Article 1509.

LIST OF REVISED PAGES ISSUED

INSERT LATEST REVISED PAGES. DESTROY SUPERSEDED PAGES.

NOTE: The portion of the text affected by the current revision is indicated by a vertical line in the outer margins of the page.

* The asterisk indicates pages revised, added or deleted by the current revision.

ADDITIONAL COPIES OF THIS PUBLICATION MAY BE OBTAINED AS FOLLOWS:

USAF ACTIVITIES.—In accordance with Technical Order No. 00–5–2. USAF

NAVAL ACTIVITIES.—Use Publications and Forms Order Blank (NavAer 2126) and submit to the nearest publications supply point listed below: NAS, Alameda, Calif.; NAS, Jacksonville, Fla.; NAS, Norfolk, Va.; NAS, San Diego, Calif.; NAS, Seattle, Wash.; NASD, ASO, Guam; NASD, Philadelphia, Pa.
For listing of available publications see Naval Aeronautic Publications Index (NavAer 00–500).

TABLE OF CONTENTS

Section		*Page No.*
I	INTRODUCTION	1
II	GROUP ASSEMBLY PARTS LIST	5
	Receiver-Transmitter Group OA–126/CPS–6B	5
	Receiver-Transmitter Group OA–127/CPS–6B	18
	Receiver-Transmitter Group OA–128/CPS–6B	31
	Receiver-Transmitter Group OA–126/CPS–6B	44
	Receiver-Transmitter Group OA–127/CPS–6B	45
	Transmitter-Receiver Control Assembly OA–102/CPS–6B	181
	Radar Modulator MD–99/CPS–6B	205
	Radar Modulator MD–98/CPS–6B	229
	Power Distribution Assembly OA–103/CPS–6B	241
	Power Supply PP–411/CPS–6B	269
	Power Supply PP–415/CPS–6B	284
	Receiver Control C–552/CPS–6B	289
	Dummy Load CAWY–14ACN	295
	Voltage Regulator CN–93/CPS–6B	303
	Radar Set Group OA–345/CPS–6B	309
	Bidirectional Coupler CU–295/U	398
III	REFERENCE SYMBOL LIST	401
IV	NUMERICAL PARTS LIST	417

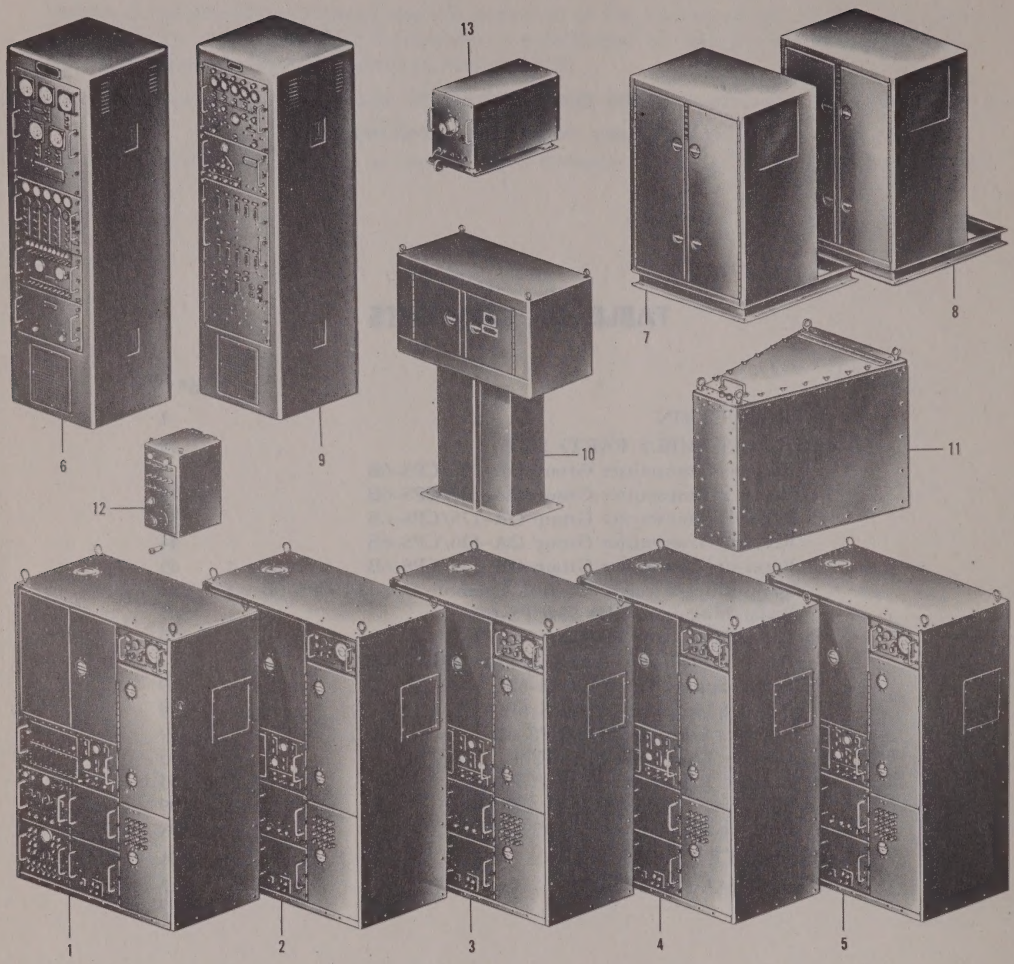

Index No.		*Figure No.*
1	RECEIVER-TRANSMITTER GROUP OA–126/CPS–6B	2
2	RECEIVER-TRANSMITTER GROUP OA–127/CPS–6B	3
3	RECEIVER-TRANSMITTER GROUP OA–128/CPS–6B	4
4	RECEIVER-TRANSMITTER GROUP OA–126/CPS–6B	5
5	RECEIVER-TRANSMITTER GROUP OA–127/CPS–6B	6
6	TRANSMITTER-RECEIVER CONTROL ASSEMBLY OA–102/CPS–6B	57
7	RADAR MODULATOR MD–99/CPS–6B	66
8	RADAR MODULATOR MD–98/CPS–6B	71
9	POWER DISTRIBUTION ASSEMBLY OA–103/CPS–6B	74
10	POWER SUPPLY PP–411/CPS–6B	83
11	POWER SUPPLY PP–415/CPS–6B	90
12	RECEIVER CONTROL C–552/CPS–6B	92
13	DUMMY LOAD CAWY–14ACN	93

Figure 1. Transmitter-Receiver System Components for Radar Set AN/CPS–6B (Sheet 1 of 3, Index Nos. 1 thru 13)

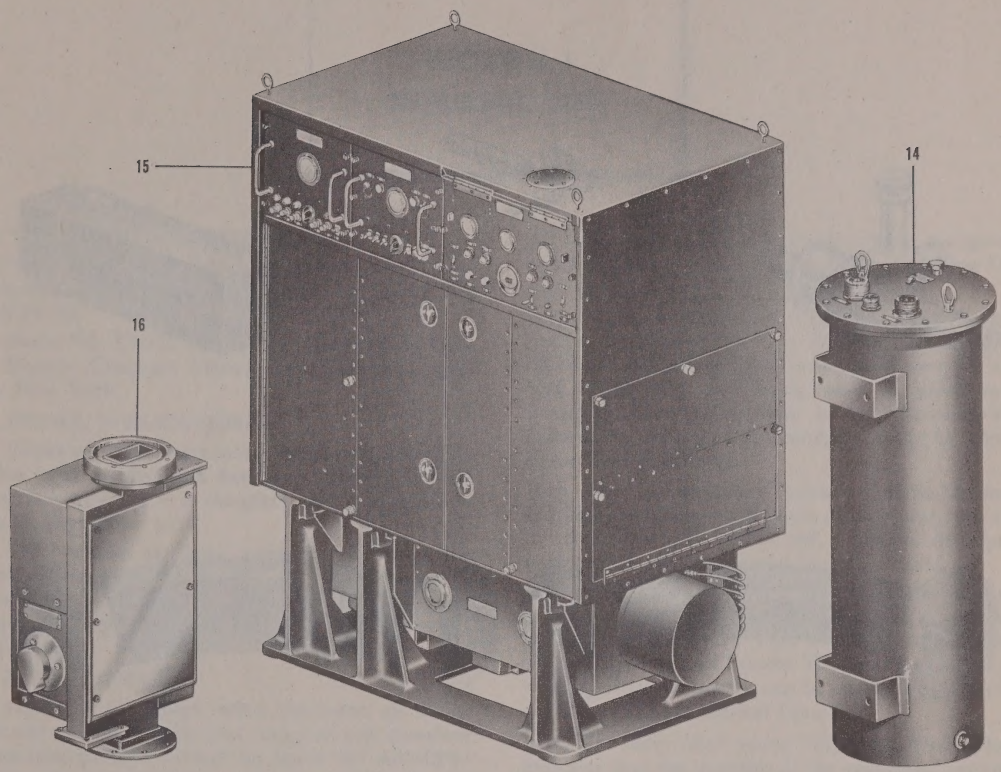

Index No.		*Figure No.*
14	VOLTAGE REGULATOR CN–93/CPS–6B	97
15	RADAR SET GROUP OA–345/CPS–6B	101
16	BIDIRECTIONAL COUPLER CU–295/U	129

Figure 1. Transmitter-Receiver System Components for Radar Set AN/CPS–6B (Sheet 2 of 3, Index Nos. 14 thru 16)

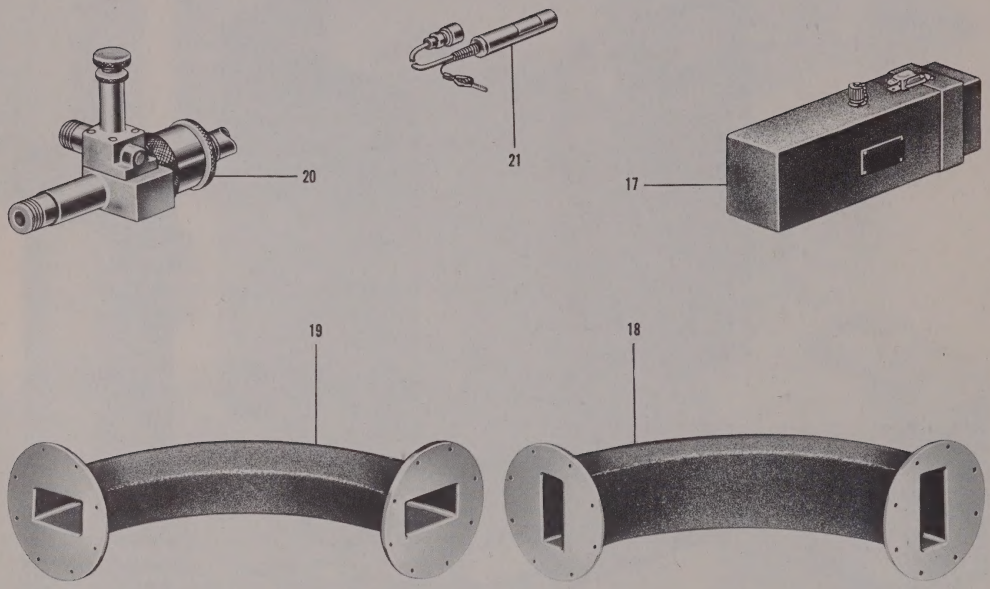

Index No.

17 REFERENCE CAVITY FR–2/U
18 "E" ELBOW UG–283/U
19 "H" ELBOW UG–284/U
20 CRYSTAL, MIXER CV–52(XW–2)/U
21 R.F. PROBE MX–925/U

Figure 1. Transmitter-Receiver System Components for Radar Set AN/CPS–6B (Sheet 3 of 3, Index Nos. 17 thru 21)

SECTION I
INTRODUCTION

1–1. EQUIPMENT CONCERNED.

1–2. This catalog lists and illustrates the Transmitter-Receiver System Components for Radar Set AN/CPS–6B.

1–3. Radar Set AN/CPS–6B is manufactured by General Electric Company, Electronics Department, Syracuse, New York.

1–4. OTHER PUBLICATIONS.

1–5. Technical data concerning Radar Set AN/CPS–6B has been divided into five parts catalogs and six instruction books. For a complete listing of publications see paragraph 1–29.

1–6. This catalog has been compiled for use in the identification and procurement of parts only. Maintenance, overhaul and/or repair should be performed by authorized personnel using the applicable instructions books.

1–7. VISUAL INDEX.

1–8. Figure 1, the visual index, illustrates all major units and test equipment that comprise one complete Transmitter-Receiver System for Radar Set AN/CPS–6B. The legend accompanying the visual index lists all of the major units and test equipment and also the respective figure numbers illustrating the complete breakdown of each major unit.

1–9. GROUP ASSEMBLY PARTS LIST.

1–10. The Group Assembly Parts List, Section II, lists the major units that comprise the Transmitter-Receiver System. Each major unit is broken down into its assemblies, sub-assemblies, sub-sub-assemblies, and detail parts. Each assembly listed is directly followed by its components properly indented, to show their relationship to the assembly.

1–11. Each illustration in the catalog is accompanied by its corresponding parts list. All components, comprising the major units, are referenced by figure or figure and index number, with the exception of sub-assemblies which are not illustrated as such. In these cases the sub-assembly is listed but not indexed. The components thereof are both listed and indexed.

1–12. The numbers listed in the "Part Number" column are the manufacturer's number, except in the case of government standard parts (AN, AF & JAN). All parts which are not purchased or are not government standard are identified by General Electric Company part numbers.

1–13. When an assembly has not been assigned a number, it is indicated as "No Number" in the "Part Number" column. For these assemblies, the part numbers of the items comprising same are given parenthetically following its name in the "Nomenclature" column. To replace such assemblies, order by nomenclature and description.

1–14. The "Nomenclature" column contains the standard item name and main noun modifier for each item in accordance with JANP 109. Complete description is given AN and commercial hardware items.

1–15. The quantities specified in the "Units per Assy" column are those used at the indicated location and are not necessarily the total used per one complete Transmitter-Receiver System. The total number of any item required per system can be obtained by referring to Section IV, "Numerical Parts List."

1–16. The entry "Ref" in the "Units per Assy" column indicates that the quantity of the particular assembly, or part, can be determined by referring to the figure and index number indicated parenthetically following the nomenclature of the item.

1–17. PURCHASED PARTS.

1–18. Parts, which are used exactly as purchased, are listed in the "Group Assembly Parts List" with the manufacturer's number in the "Part Number" column. The abbreviation assigned the manufacturer is given parenthetically immediately following the nomenclature of the item. For a list of manufacturer's and their abbreviations see paragraph 1–40.

1–19. COMMERCIAL ITEMS.

1–20. The listing "Coml" in the "Part Number" column indicates that the item has not been assigned a number, but may be procured from normal commercial sources. Sufficient information is given in the "Nomenclature" column for government procurement.

1–21. SYMBOLS USED.

1–22. All reference symbols used in this catalog are in accordance with JANP 109, with the following exceptions:

Nomenclature	Jan Sym.	Sym. Used
HOLDER, fuse	E	XF
LAMPHOLDER	J	XI
LIGHT, indicator	I	XI
SOCKET, relay	X	XK
SOCKET, tube	X	XV

1–23. The entry "Ref item XX", in the "Nomenclature" column is used to eliminate duplicate explosions of items, such as lamps and fuses. In these cases one typical explosion is made and each successive similar item is referenced to the one shown.

1–24. The designation "(Att. Pt.)", following the description of a part, indicates that the specific part is used to attach the item immediately preceding it in the parts list. When the attaching parts for several items are grouped, the symbol "(Att. Pt. for items X thru XX)" will be used.

1–25. The symbol "✦", in the "Figure and Index" column, is used to designate a break in the sequence of index numbers due to deletion of parts by design changes.

1–26. A capitalized alphabetical suffix is used after an index number to denote an addition of parts due to design changes.

1–27. The illustration and parts list for Figure 80 have been deleted by design changes.

1–28. The "Application" column is used to indicate application of parts between similar assemblies.

1–29. The following is a list of parts catalogs and instructions books for Radar Set AN/CPS–6B.

PUBLICATION	T.O. NUMBER
Operating Instructions for Radar Set AN/CPS–6B	T.O. No. 16–30CPS6–6
Maintenance Instructions for Transmitter-Receiver System Components	T.O. No. 16–30CPS6–7
Maintenance Instructions for Antenna System Components	T.O. No. 16–30CPS6–11
Maintenance Instructions for Video System Components	T.O. No. 16–30CPS6–15
Maintenance Instructions for Telephone Communication System Components	T.O. No. 16–30CPS6–19
Maintenance Instructions for Primary Power System Components and Maintenance Utility Units	T.O. No. 16–30CPS6–23
Parts Catalog for Transmitter-Receiver System Components	T.O. No. 16–30CPS6–8 (This Catalog)
Parts Catalog for Antenna System Components	T.O. No. 16–30CPS6–12
Parts Catalog for Video System Components	T.O. No. 16–30CPS6–16
Parts Catalog for Telephone Communication System Components	T.O. No. 16–30CPS6–20
Parts Catalog for Primary Power System Components and Maintenance Utility Units	T.O. No. 16–30CPS6–24

1–30. HOW TO USE THE PARTS CATALOG.

1–31. When the part number is known and it is desired to find the nomenclature or illustration, the number should be located in Section IV, "Numerical Parts List." In the numerical list, a figure and index number of the "Group Assembly Parts List" will be shown for the part number. By consulting the respective "Group Assembly Parts List" or figure, the part can be located by reference to the index number.

1–32. When the part number is not known and is required, the part can be found by locating, in the "Table of Contents", or "Visual Index", the major unit of which the part is a component. Then by turning to the page number indicated for the major unit, the figure illustrating the parts will be given. After the part has been located on the illustration, its nomenclature and part number can be found by referring to the index number in the accompanying list.

1–33. When the reference symbol is known and the part number, description and illustration of the part is required, the symbol can be located in the "Reference Symbol List", Section III. A figure and index number of the "Group Assembly Parts List" will be shown opposite the reference symbol. By turning to the figure and its accompanying parts list, the part can be located by the index number.

1–34. REFERENCE SYMBOL LIST.

1–35. All reference symbols in the catalog are listed alphabetically and numerically in Section III, "Reference Symbol List." These symbols are in complete agreement with those used in all technical literature. Listed opposite each symbol is the figure and index number for use in locating the item.

1–36. NUMERICAL PARTS LIST.

1–37. This list catalogs each part, including government standards, by part numbers, in numerical sequence. Commercial and "No Number" parts are listed alphabetically, by nomenclature, preceding the numerical listings.

1–38. SPECIAL SERVICE TOOLS.

1–39. As there are no special service tools required for the Transmitter-Receiver System, this section has been omitted.

1–40. MANUFACTURERS' ABBREVIATIONS.

1–41. The following is a list of manufacturers, their codes and addresses as used in compiling this catalog.

Aerovox	Aerovox Corp. New Bedford, Mass.
Air-Maze	Air-Maze Corp. 5180 Harvard Avenue Cleveland, Ohio
Airtron	Airtron Inc. 650 Bloomingdale Rd. Pleasant Plains, S. I. 9, N. Y.
Alden	Alden Products Co. 117 North Main Street Brockton, Mass.
Allen Mfg	Allen Mfg. Co., The 100 Sheldon Street Hartford 1, Conn.
Allied Cont	Allied Control Co., Inc. 79th Street at West End Avenue New York 21, N. Y.
Amer Blower	American Blower Corp. Detroit 32, Mich.
Amer Rad Hdwe	American Radio Hardware Co., Inc. Arhco Building Mount Vernon, N. Y.
Amer Screw	American Screw Co. 121 Stevens Street Providence 1, R. I.
Amphenol	American Phenolic Corp. 1858 South 54th Avenue Chicago 50, Ill.
Auto Elec	Automatic Electric Company 1033 West Van Buren Street Chicago 7, Ill.
Barcy Nicholson	Barcy Nicholson Co. Detroit, Mich.
Bead Chain	Bead Chain Mfg. Co., The 64 Mount Grove Street Bridgeport 5, Conn.
Bird Engr	Bird Engineering Co. 1800 East 38th Street Cleveland 14, Ohio
Birnbach	Birnbach Radio Company 145 Hudson Street New York, N. Y.
Birtcher	Birtcher Corp., The 5087 Huntington Drive, North Los Angeles, Calif.
Bodine Elec	Bodine Electric Co. Ohio Street and Oakley Boulevard Chicago 12, Ill.
Boots Aircraft	Boots Aircraft Nut Corp. New Canaan, Conn.
Boston Gear	Boston Gear Works, Inc. 3200 Kerr Street North Quincy 71, Mass.
Bristolco	Bristol Company, The 117 Bristol Road Waterbury 91, Conn.
Bronson HD	Bronson, Homer D., Co. Beacon Falls, Conn.
Buggie	Buggie, H. H., Co. 2143 Madison Avenue Toledo 1, Ohio
Burndy	Burndy Engineering Co. 107 Bruckner Boulevard New York 54, N. Y.
Buss	Bussman Mfg. Co. 2538 West University Street St. Louis 7, Mo.
Cambridge Therm	Cambridge Thermionics Corp. 445 Concord Avenue Cambridge, Mass.
Camloc	Camloc Fastener Co. 420 Lexington Avenue New York 17, N. Y.
Cannonelec	Cannon Electric Development Co. 3209 Humboldt Street Los Angeles 31, Calif.
Centralab	Centralab Div. Glove Union, Inc. 900 East Keefe Avenue Milwaukee, Wis.
C–H	Cutler-Hammer, Inc. 315 North 12th Street Milwaukee 1, Wis.
Cinch	Cinch Mfg. Corp. 2339 West Van Buren Street Chicago, Ill.
Clare CP	Clare, C. P., Co. 4719 Sunnyside Avenue Chicago 30, Ill.
Coral Design	Coral Designs Box 248 Forest Hills, L. I., N. Y.
Corbin Cabinet	Corbin Cabinet Lock Div. American Hardware Corp. New Britain, Conn.
Corbin Screw	Corbin Screw Co. Div. American Hardware Corp. New Britian, Conn.
Culver-Stearns	Culver-Stearns Mfg. Co. Worcester, Mass.
Dialco	Dial Light Co. of America, Inc. 900 Broadway New York 3, N. Y.
Diamond Instr	Diamond Instrument Co. Wakefield, Mass.
Diehl	Diehl Mfg. Co. 1100 Finderne Avenue Somerville, N. J.
Drake Mfg	Drake Mfg. Co. 1713 Hubbard Street Chicago, Ill.
Dynamic Air Engr	Dynamic Air Engr. 1619 S. Alameda Street Los Angeles 21, Calif.
Dzus	Dzus Fastener Co., Inc. Box 185 Babylon, N. Y.
Eastern Devices	Eastern Air Devices, Inc. 585 Dean Street Brooklyn 17, N. Y.
Eby	Eby, Hugh H., Inc. 4700 Stenton Avenue Philadelphia, Pa.
Eclipse-Pioneer	Eclipse-Pioneer Div., Bendix Aviation Corp. Teterboro, N. J.
Edison	Edison, Thomas A., Inc. West Orange, N. J.
Eisemann	Eisemann Corp. Brooklyn 32, N. Y.
Electrical Industries	Electrical Industries, Inc. 44 Summer Avenue Newark 4, N. J.
Erie	Erie Resistor Corp. Erie, Pa.
Esna	Elastic Stop Nut Corp. 2330 Vauxhall Road Union, N. J.
Fafnir	Fafnir Bearing Co., The New Britain, Conn.
Fed Tele & Rad	Federal Telephone & Radio Corp. 591 Broad Street Newark, N. J.
GE	General Electric Co. Schenectady 37, N. Y.
Gen Cement	General Cement Mfg. Co. 919 Taylor Avenue Rockford, Ill.

Genceraco	General Ceramics & Steatite Corp. Keasby, N. J.
Groov-Pin	Groov-Pin Corp. Union City, N. J.
Haydon, A. W.	Haydon Manufacturing Co., Inc. Forestville, Conn.
Heinemann	Heinemann Circuit Breaker Co. 939 Plum Street Trenton 2, N. J.
Heli-Coil Corp	Heli-Coil Corp. 47-23 35th Street Long Island City 1, N. Y.
Hubbell	Hubbell, Harvey, Inc. Bridgeport 2, Conn.
Imperbrass	Imperial Brass Mfg. Co. 1216 Harrison Street Chicago 7, Ill.
Industrial Prod Co	Industrial Products Co. Danbury, Conn.
IRC	International Resistance Co. 401 North Broad Street Philadelphia 8, Pa.
Johnson EF	Johnson, E. F., Co. Waseca, Minn.
Jones HB	Jones, Howard B., Co. 2640 West George Street Chicago, Ill.
Kurz-Kasch	Kurz-Kasch, Inc. 1417 South Broadway Dayton 1, Ohio
Littelfuse	Littelfuse, Inc. 4757 North Ravenswood Avenue Chicago 40, Ill.
LN Barry	L. N. Barry Co. Cambridge, Mass.
Lord	Lord Mfg. Co. 1635 West 12th Street Erie, Pa.
Mallory	Mallory, P. R., Co., Inc. Mallory Building Indianapolis, Ind.
Marion Elec Instru	Marion Electrical Instrument Co. Stark Street Gate Manchester, N. H.
Metal Textile	Metal Textile Corp. 647 East First Avenue Roselle Park, N. J.
Millen	Millen, James, Mfg. Co., Inc. Malden, Mass.
Morse Tw Dr	Morse Twist Drill & Machine Co. New Bedford, Mass.
National Co	National Co. Inc. Malden, Mass.
Natl Lock	National Lock Co. Rockford, Ill.
National Lock Washer	National Lock Washer Co., The 40 Hermon Street Newark 5, N. J.
ND	New Departure Div., G. M. Corp. 1948 Thomas Street Bristol, Conn.
NDRC	Radiation Laboratory Cambridge, Mass.
Norma-Hoff	Norma-Hoffman Bearings Corp. Stamford, Conn.
Northern Industrial Chemical	Northern Industrial Chemical Co. 17 Elkins Street So. Boston, Mass.
Ohmite	Ohmite Mfg. Co. 4835 West Flournoy Street Chicago 44, Ill.
Parker-Kalon	Parker-Kalon Corp. 194 Varick Street New York 14, N. Y.
PJ Nilson	P. J. Nilson Chicago, Ill.
Phillips Control Corp	Phillips Control Corp. 84 W. Jefferson St., Joliet, Ill.
Polytechnic Research & Development	Polytechnic Research and Development Co. 202 Tillary Street Brooklyn, N. Y.
Prestole Corp	Prestole Corp. Toledo, Ohio
Raytheon	Raytheon Mfg. Co. Waltham, Mass.
Romec	Romec Div. of Lear, Inc. Abbe Road Elyria, Ohio
Shakeproof	Shakeproof, Inc. 2501 North Keeler Avenue Chicago 39, Ill.
Sickles, F. W.	Sickles, F. W., Co., The Chicopee, Mass.
Spencer-Thermo	Spencer Thermostat Co. Attleboro, Mass.
Sprague	Sprague Electric Co. North Adams, Mass.
Superior Elec	Superior Electric Co. Bristol, Conn.
Sylvania Prod	Sylvania Electric Products, Inc. Emporium, Penna.
Terpening	Terpening, L. H., Co. 16 West 61st Street New York, N. Y.
Thomas & Betts	Thomas & Betts Co. Elizabeth, N. J.
Timken	Timken Roller Bearing Co., The Canton 6, Ohio
Tinnerman Prod	Tinnerman Products, Inc. 2038 Fulton Road Cleveland 13, Ohio
Trumbull	Trumbull Elec. Mfg. Co., The 1936 Woodford Avenue Plainville, Conn.
Waldes	Waldes Koh-I-Noor, Inc. Austel Place Long Island City 1, N. Y.
Waterfield	Waterfield, J. B., Co. Attleboro, Mass.
Weatherhead	Weatherhead Co., The Cleveland 8, Ohio
WECo	Western Electric Co. 195 Broadway New York 7, N. Y.
Wemco	Westinghouse Electric and Mfg. Co. East Pittsburgh, Pa.
White SS	White, S.S., Dental Co. 10 E. 40th Street New York 16, N. Y.
Whitney Mfg Co	Whitney Mfg. Co. 650 Race Street Rockford, Ill.
Wiggins	E. B. Wiggins Oil Tool Co. 3424 East Olympic Blvd. Los Angeles 23, Calif.
Winchester Electronics	Winchester Electronics Inc. Glenbrook, Conn.
WL	Ward Leonard Electric Co. Mt. Vernon, N. Y.
Wrought Washer	Wrought Washer Mfg. Co. Milwaukee 7, Wis.

SECTION II
GROUP ASSEMBLY PARTS LIST

FIG. & INDEX NO.	PART NUMBER	REF SYMBOL	1 2 3 4 5 6 7 NOMENCLATURE	UNITS PER ASSY	APPLI-CATION
			RECEIVER-TRANSMITTER GROUP OA–126/CPS–6B		
2–	ML7353300G1	—	RECEIVER-TRANSMITTER GROUP OA–126/CPS–6B	1	
–1	672	—	. SLOTTED LINE IM–23/U (See Figure 7 for breakdown) (Polytechnic Research & Development)	1	
–2	Coml	—	. SCREW, mach: hex head; brass, cad pl; 1/4 in–20; 1-3/4 in lg (Att. Pt.) (Amer Screw)	1	
–3	AN936B416B	—	. WASHER, lock: bronze, tinned; round, 1/4 in; shakeproof-type, tw ext teeth (Att. Pt.)	8	
–4	D1056–165	—	. DUPLEXER CU–193/CPS–6B (See Figure 9 for breakdown) (Terpening)	8	
–5	AN520–10R10	—	. SCREW, mach: Phillips drive; RH; steel, cad pl; No. 10–32; 5/8 in lg (Att. Pt.)	1	
–6	AN936B10B	—	. WASHER, lock: bronze, tinned; round, No. 10; shakeproof-type, tw ext teeth (Att. Pt.)	8	
–7	AN345–10	—	. NUT, hex: steel, cad pl; No. 10–32 (Att. Pt.)	8	
–8	ML7352780G1	—	. FREQUENCY CONTROL C–595/CPS–6B (See Figure 22 for breakdown)	8	
–9	ML7664491G1	—	. IF AMPLIFIER AM–304/CPS–6B (See Figure 26 for breakdown)	1	
–10	ML7664492G1	—	. POWER SUPPLY PP–460/CPS–6B (See Figure 27 for breakdown)	1	
–11	AN520–10R7	—	. SCREW, mach: Phillips drive; RH; steel, cad pl; No. 10–32; 7/16 in lg (Att. Pt.)	1	
–12	AN936B10B	—	. WASHER, lock: bronze, tinned; round, No. 10; shakeproof-type, tw ext teeth (Att. Pt.)	8	
–13	AN345–10	—	. NUT, hex: steel, cad pl; No. 10–32 (Att. Pt.)	8	
–14	ML7354003G1	—	. RF OSCILLATOR O–94/CPS–6B (See Figure 28 for breakdown)	8	
–15	ML7352793G1	—	. RECEIVER CONTROL C–596/CPS–6B (See Figure 35 for breakdown)	1	
–16	ML7353055G1	—	. VOLTAGE REGULATOR CN–103/CPS–6B (See Figure 38 for breakdown)	1	
–17	ML7353057G1	—	. POWER SUPPLY PP–459/CPS–6B (See Figure 39 for breakdown)	1	
–18	ML7353099G1	—	. FRAME (See Figure 55 for breakdown)	1	
–19	NP140327	—	. PLATE, identification	1	
–20	NP140020C	—	. PLATE, identification	1	
–21	Coml	—	. SCREW, self-tapping: Phillips drive; Bind H; SS; No. 4–40; 1/4 in lg (Att. Pt. for items 19 and 20) (Shakeproof)	1	
–22	HK7T/RK5586	V2701	. TUBE, electron	8	
–23	AN520–10R8	—	. SCREW, mach: Phillips drive; RH; steel, cad pl; No. 10–32; 1/2 in lg (Att. Pt.)	1	
–24	AN936B10B	—	. WASHER, lock: bronze, tinned; round, No. 10; shakeproof-type, tw ext teeth (Att. Pt.)	8	
–25	T7665292P2	—	. COUPLING UNIT, wave guide	8	
–26	AN515–416R14	—	. SCREW, mach: Phillips drive; RH; steel, cad pl; 1/4 in–20; 7/8 in lg (Att. Pt.)	1	
–27	AN936B416B	—	. WASHER, lock: bronze, tinned; round, 1/4 in; shakeproof-type, tw ext teeth (Att. Pt.)	8	
–28	AN340–416	—	. NUT, hex: steel, cad pl; 1/4 in–20 (Att. Pt.)	8	
–29	Coml	—	. SCREW, eye: steel, cad pl; 1/2 in–13; 7/16 in lg; machine screw thread; straight angle round eye; 7/16 in ID (Amer Screw)	8	
–30	AN335–8	—	. NUT, hex: steel, cad pl; 1/2 in–13 (Att. Pt.)	4	
–31	K7005270P1	—	. CHAIN	4	
–32	AN505–8–7	—	. SCREW, mach: slot drive; FH; steel, cad pl; No. 8–32; 7/16 in lg (Att. Pt.)	1	
–33	AN515–8–5	—	. SCREW, mach: slot drive; RH; steel, cad pl; No. 8–32; 5/16 in lg (Att. Pt.)	1	
–34	AN936B8B	—	. WASHER, lock: bronze, tinned; round, No. 8; shakeproof-type, tw ext teeth (Att. Pt.)	2	
–35	AN340–8	—	. NUT, hex: steel, cad pl; No. 8–32 (Att. Pt.)	3	
–36	K7005270P1	—	. CHAIN	3	
–37	AN505–8–7	—	. SCREW, mach: slot drive; FH; steel, cad pl; No. 8–32; 7/16 in lg (Att. Pt.)	1	
–38	AN515–8–5	—	. SCREW, mach: slot drive; RH; steel, cad pl; No. 8–32; 5/16 in lg (Att. Pt.)	1	
–39	AN936B8B	—	. WASHER, lock: bronze, tinned; round, No. 8; shakeproof-type, tw ext teeth (Att. Pt.)	2	
–40	AN340–8	—	. NUT, hex: steel, cad pl; No. 8–32 (Att. Pt.)	3	
–41	ML7772591G1	—	. DOOR (See Figure 49 for breakdown)	3	
–42	ML7772590G1	—	. DOOR (See Figure 50 for breakdown)	1	
–43	ML7772598G1	—	. DOOR (See Figure 51 for breakdown)	1	
–44	ML7772592G1	—	. DOOR (See Figure 52 for breakdown)	1	
–45	AN515–8R4	—	. SCREW, mach: Phillips drive; RH; steel, cad pl; No. 8–32; 1/4 in lg (Att. Pt. for items 41 thru 44)	1	
–46	AN936B8B	—	. WASHER, lock: bronze, tinned; round, No. 8; shakeproof-type, tw ext teeth (Att. Pt. for items 41 thru 44)	23	
–47	K7002269P2	—	. BRACKET	23	
–48	AN520B10R7	—	. SCREW, mach: Phillips drive; RH; brass, black oxidized; No. 10–32; 7/16 in lg (Att. Pt.)	2	
				4	

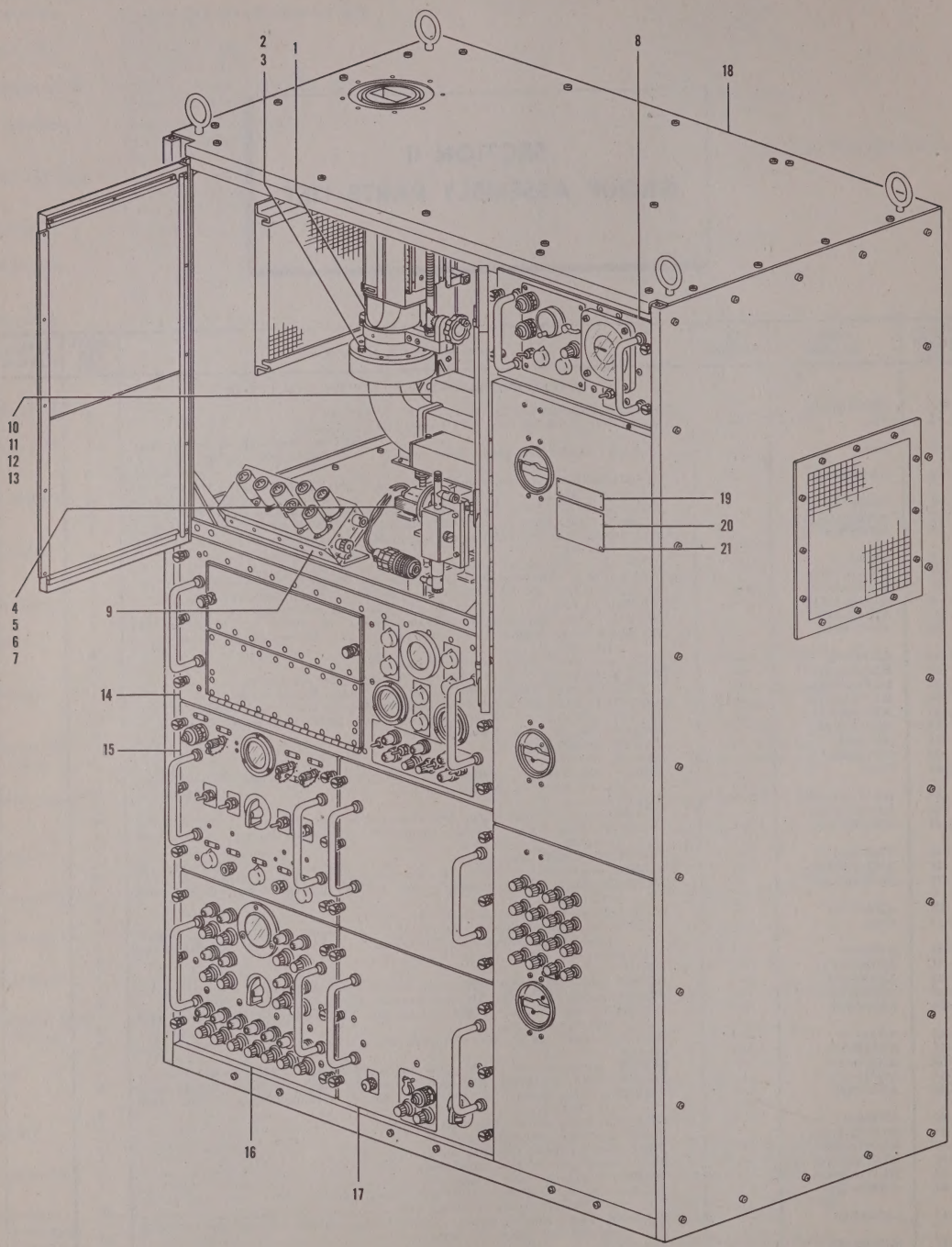

Figure 2. Receiver-Transmitter Group OA–126/CPS–6B, Front View (Sheet 1 of 5 sheets, Index Nos. 1 thru 21)

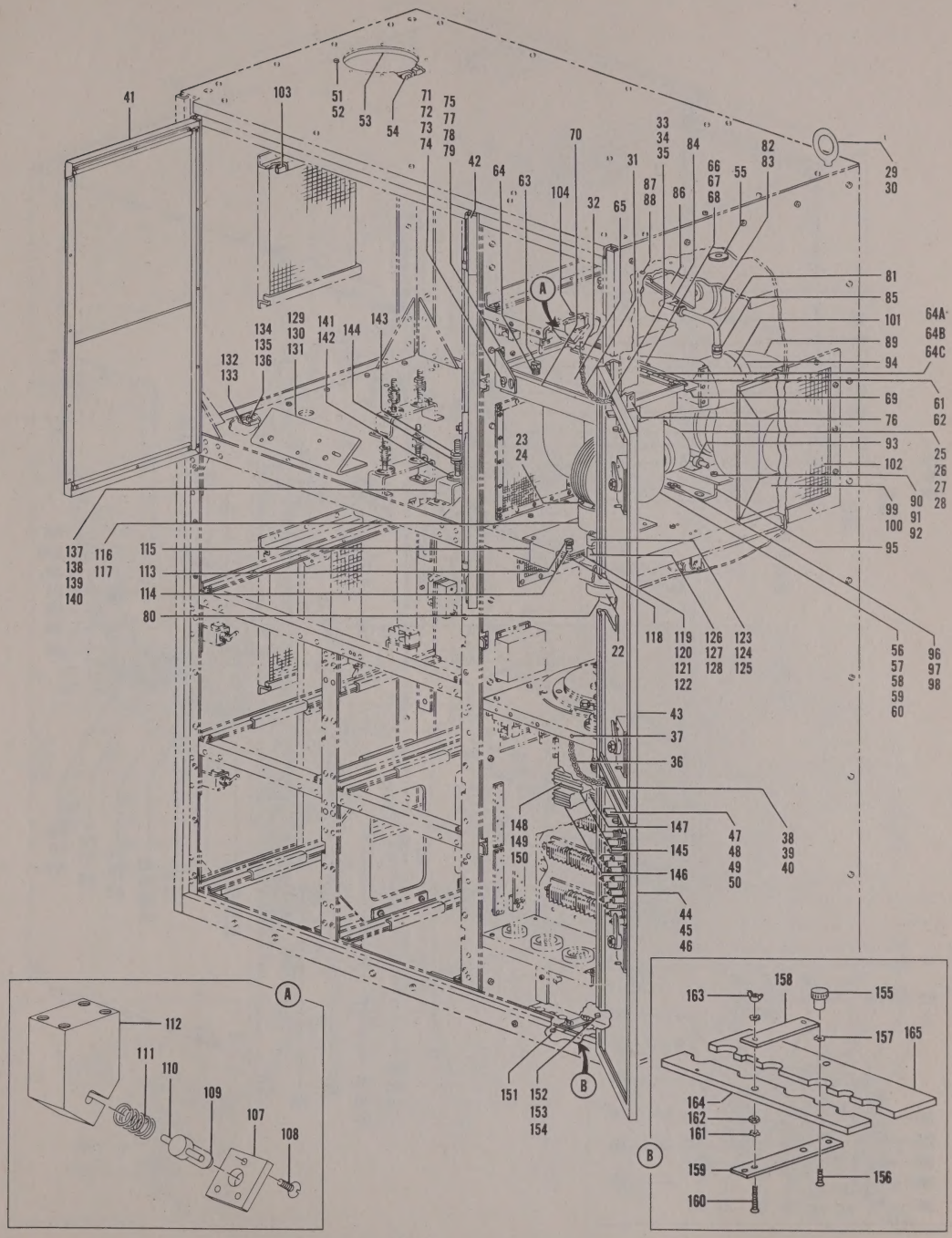

Figure 2. Receiver-Transmitter Group OA–126/CPS–6B, Front View (Sheet 2 of 5 sheets, Index Nos. 22 thru 165)

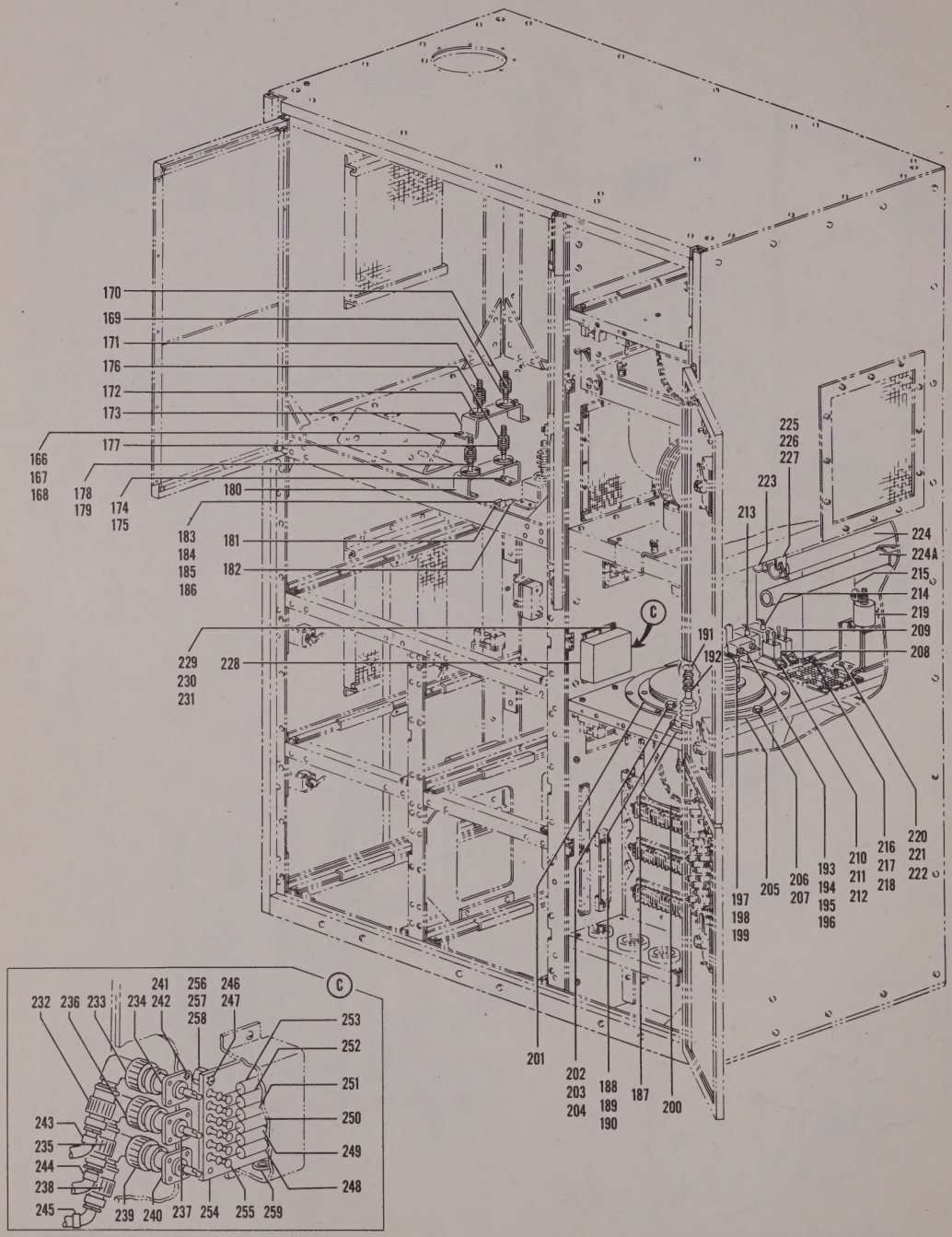

Figure 2. Receiver-Transmitter Group OA–126/CPS–6B, Front View (Sheet 3 of 5 sheets, Index Nos. 166 thru 259)

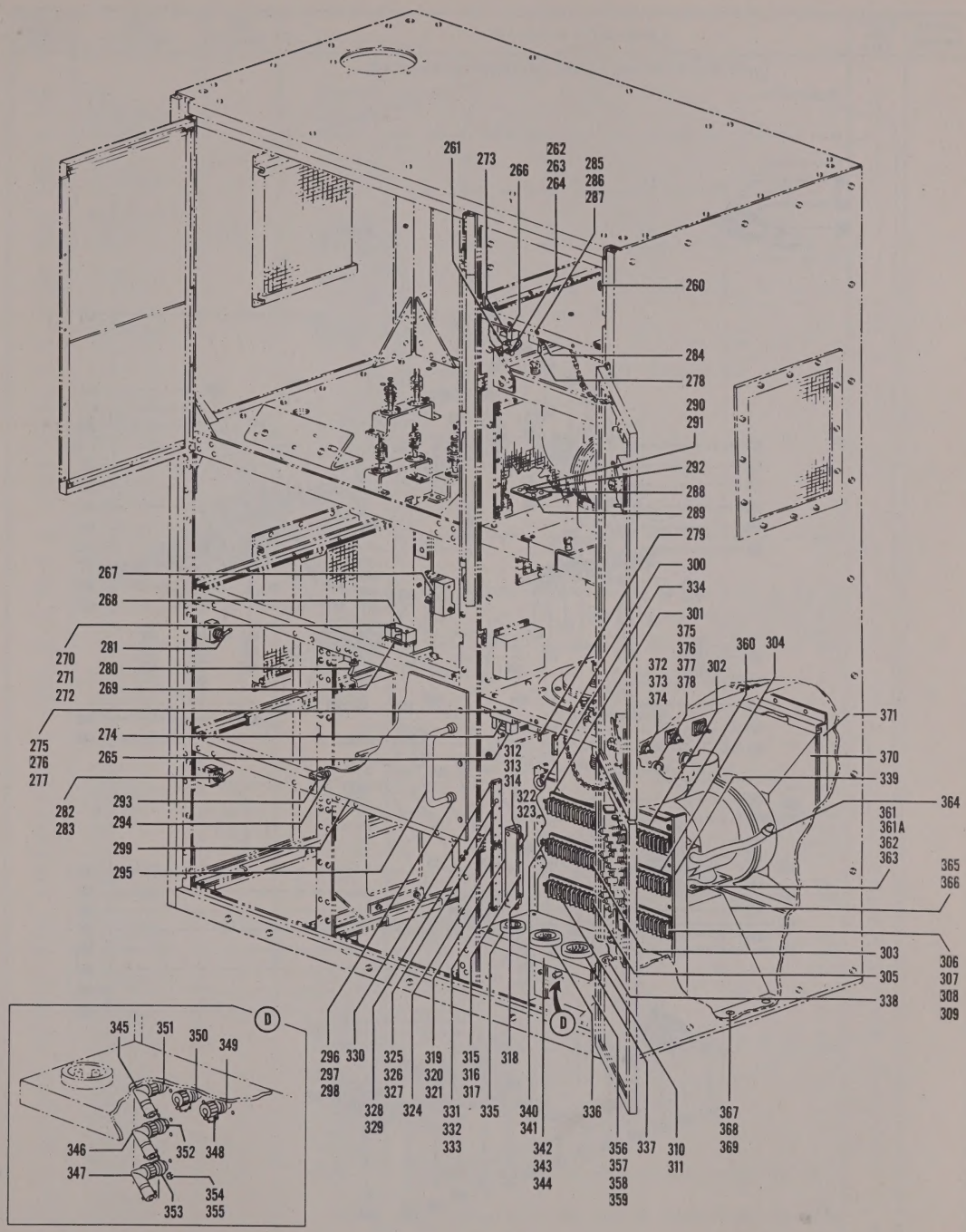

Figure 2. Receiver-Transmitter Group OA–126/CPS–6B, Front View (Sheet 4 of 5 sheets, Index Nos. 260 thru 378)

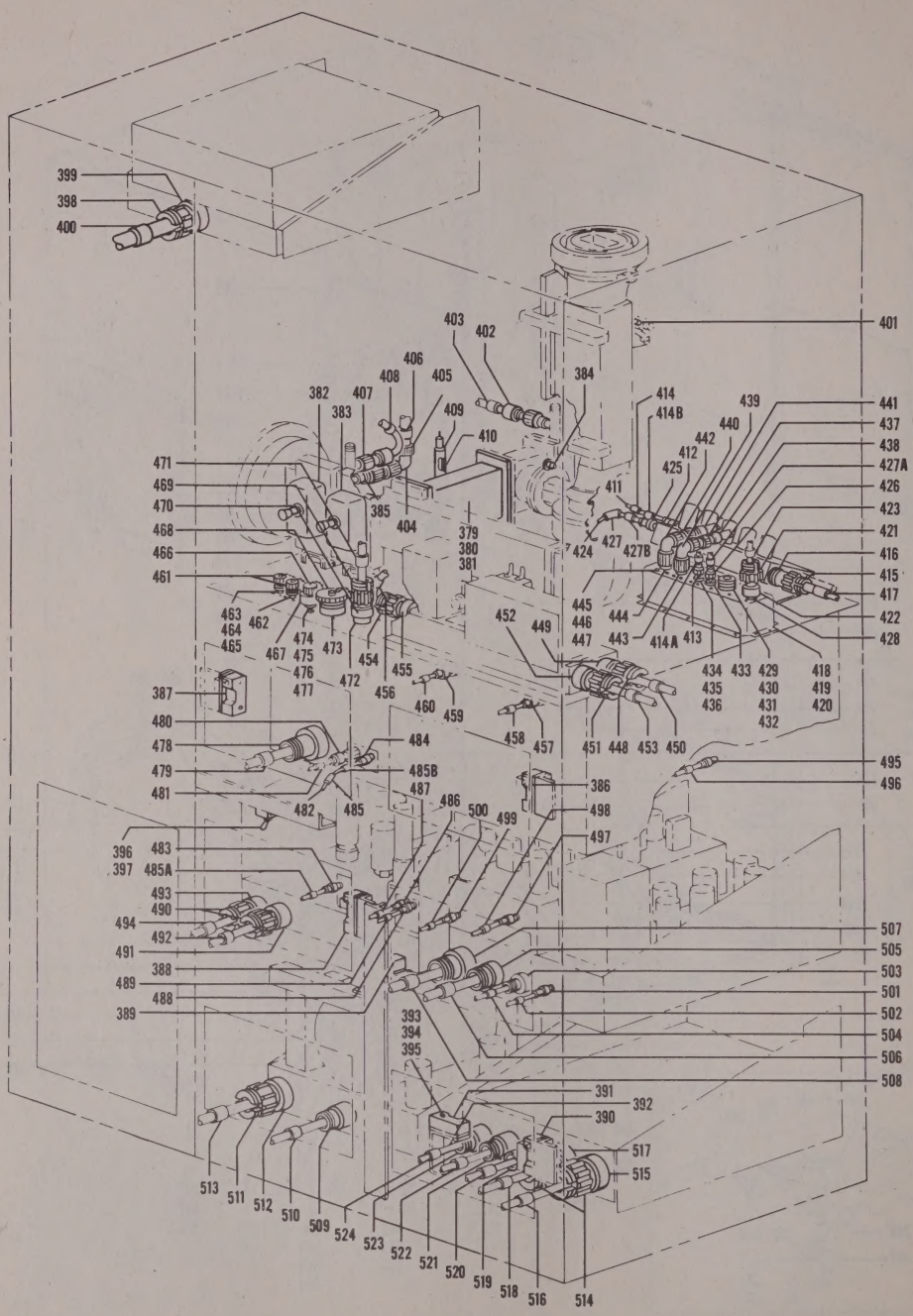

Figure 2. Receiver-Transmitter Group OA–126/CPS–6B, Rear View (Sheet 5 of 5 sheets, Index Nos. 379 thru 524)

FIG. & INDEX NO.	PART NUMBER	REF SYMBOL	NOMENCLATURE 1 2 3 4 5 6 7	UNITS PER ASSY	APPLI-CATION
			RECEIVER-TRANSMITTER GROUP OA–126/CPS–6B (Cont)		
2–49	1910	—	. WASHER, lock (Att. Pt.) (Shakeproof)	4	
–50	AN345–10	—	. NUT, hex: steel, cad pl; No. 10–32 (Att. Pt.)	4	
	ML7404372G1	—	. CLAMP	1	
–51	AN520B10R8	—	. SCREW, mach: Phillips drive; RH; brass, black oxidized; No. 10–32; 1/2 in lg (Att. Pt.)	8	
–52	1910	—	. WASHER, lock (Att. Pt.) (Shakeproof)	8	
–53	M7404372P2	—	. . CLAMP	1	
–54	Coml	—	. . SCREW, mach: Bristo four-spline drive; socket head; SS; 1/4 in–20; 1 in lg (Bristolco)	1	
–55	M2R53P5	—	. GROMMET	1	
–56	M7482642P1	E2701	. MAGNET	1	
–57	Coml	—	. SCREW, mach: Phillips drive; RH; brass, cad pl; 1/4 in–20; 1–7/8 in lg (Att. Pt.) (Amer Screw)	4	
–58	AN960–416	—	. WASHER, flat: steel, cad pl; round, 1/4 in (Att. Pt.)	4	
–59	AN936B416B	—	. WASHER, lock: bronze, tinned; round, 1/4 in; shakeproof-type, tw ext teeth (Att. Pt.)	4	
–60	AN340–416	—	. NUT, hex: steel, cad pl; 1/4 in–20 (Att. Pt.)	4	
	ML7772595G1	—	. SHELF, mounting	1	
–61	AN520–10R7	—	. SCREW, mach: Phillips drive; RH; steel, cad pl; No. 10–32; 7/16 in lg (Att. Pt.)	5	
–62	AN936B10B	—	. WASHER, lock: bronze, tinned; round, No. 10; shakeproof-type, tw ext teeth (Att. Pt.)	5	
–63	K7126123P4	—	. . SCREW, captive	2	
–64	K7128235P2	—	. . BUSHING	2	
–64A	M7403515P1	—	. . HINGE	1	
–64B	AN510–10R7	—	. . SCREW, mach: Phillips drive; FH; steel, cad pl; No. 10–32; 7/16 in lg (Att. Pt.)	5	
–64C	K7861714P15	—	. . NUT, lock (Att. Pt.)	5	
–65	P7772595P2	—	. . SHELF, mounting	1	
–66	K7001209P1	—	. BRACKET	1	
–67	AN520–10R7	—	. SCREW, mach: Phillips drive; RH; steel, cad pl; No. 10–32; 7/16 in lg (Att. Pt.)	3	
–68	AN936B10B	—	. WASHER, lock: bronze, tinned; round, No. 10; shakeproof-type, tw ext teeth (Att. Pt.)	3	
–69	ML7403599G1	—	. BRACKET	1	
–70	ML7001565G1	—	. BRACKET	1	
–71	Coml	—	. SCREW, mach: slot drive; hex head; brass, cad pl; 1/4 in–20; 3/4 in lg (Att. Pt. for items 69 and 70) (Amer Screw)	8	
–72	Coml	—	. WASHER, flat: steel, cad pl; round, 5/16 in ID, 3/4 in OD, 0.063 in thk (Att. Pt. for items 69 and 70) (Wrought Washer)	8	
–73	AN936B416B	—	. WASHER, lock: bronze, tinned; round, 1/4 in; shakeproof-type, tw ext teeth (Att. Pt. for items 69 and 70)	8	
–74	AN340–416	—	. NUT, hex: steel, cad pl; 1/4 in–20 (Att. Pt. for items 69 and 70)	8	
–75	K7000552P1	—	. GUSSET	2	
–76	K7000552P2	—	. GUSSET	2	
–77	AN520–10R8	—	. SCREW, mach: Phillips drive; RH; steel, cad pl; No. 10–32; 1/2 in lg (Att. Pt. for items 75 and 76)	12	
–78	AN936B10B	—	. WASHER, lock: bronze, tinned; round, No. 10; shakeproof-type, tw ext teeth (Att. Pt. for items 75 and 76)	12	
–79	AN345–10	—	. NUT, hex: steel, cad pl; No. 10–32 (Att. Pt for items 75 and 76)	12	
–80	K37212	P2705	. CONNECTOR, plug (Millen)	1	
–81	K7003097P1	—	. TUBING	1	
–82	101P2GE	S2719	. SWITCH, pressure (Coral Design)	1	
–83	1824	—	. WASHER, lock (Att. Pt.) (Shakeproof)	1	
–84	62F	—	. FITTING, pipe (Imperbrass)	1	
–85	68F	—	. FITTING, pipe (Imperbrass)	1	
–86	ML7404390G1	—	. BRACKET	1	
–87	AN520–10R8	—	. SCREW, mach: Phillips drive; RH; steel, cad pl; No. 10–32; 1/2 in lg (Att. Pt.)	4	
–88	AN936B10B	—	. WASHER, lock: bronze, tinned; round, No. 10; shakeproof-type, tw ext teeth (Att. Pt.)	4	
–89	P7700709P1	B2701	. BLOWER (See Figure 53 for breakdown)	1	
–90	AN515–416R10	—	. SCREW, mach: Phillips drive; RH; steel, cad pl; 1/4 in–20; 5/8 in lg (Att. Pt.)	4	
–91	AN936B416B	—	. WASHER, lock: bronze, tinned; round, 1/4 in; shakeproof-type, tw ext teeth (Att. Pt.)	4	
–92	AN340–416	—	. NUT, hex: steel, cad pl; 1/4 in–20 (Att. Pt.)	4	
–93	3302	—	. CLAMP (Thomas & Betts)	1	
–94	K7004265P1	—	. CLAMP	1	
–95	P7700660P1	—	. BRACKET	1	
–96	AN515–416R8	—	. SCREW, mach: Phillips drive; RH; steel, cad pl; 1/4 in–20; 1/2 in lg (Att. Pt.)	6	
–97	AN936B416B	—	. WASHER, lock: bronze, tinned; round, 1/4 in; shakeproof-type, tw ext teeth (Att. Pt.)	6	
–98	AN340–416	—	. NUT, hex: steel, cad pl; 1/4 in–20 (Att. Pt.)	6	
–99	ML7600463G1	—	. DUCT	1	
–100	AN960–10	—	. WASHER, flat: steel, cad pl; No. 10 (Att. Pt.)	4	
–101	ML7665366G1	—	. DUCT	1	
–102	M7403529P1	—	. CLEANER, air	3	
–103	W7353300P44	—	. GASKET	4	
	ML7000635G1	—	. FASTENER, latch	1	
–104	AN510–416R8	—	. SCREW, mach: Phillips drive; FH; steel, cad pl; 1/4 in–20; 1/2 in lg (Att. Pt.)	4	
✦					
–107	K7000634P1	—	. . PLATE, retainer	1	
–108	AN505–6R7	—	. . SCREW, mach: Phillips drive; FH; steel, cad pl; No. 6–32; 7/16 in lg (Att. Pt.)	3	

FIG. & INDEX NO.	PART NUMBER	REF SYMBOL	NOMENCLATURE 1 2 3 4 5 6 7	UNITS PER ASSY	APPLI-CATION
			RECEIVER-TRANSMITTER GROUP OA–126/CPS–6B (Cont)		
2–109	K7000511P1	—	. . PLUNGER	1	
–110	K7000550P1	—	. . PIN, locking	1	
–111	K7000633P1	—	. . SPRING	1	
–112	K7000632P1	—	. . BLOCK, latch	1	
–113	K7126123P4	—	. SCREW, captive	4	
–114	K7128235P2	—	. BUSHING	4	
–115	M7483055P1	—	. PLATE, mounting	1	
–116	M7483054P1	—	. MOUNTING, tube	1	
–117	AN505–416R10	—	. SCREW, mach: Phillips drive; FH; steel, cad pl; 1/4 in–20; 5/8 in lg (Att. Pt.)	4	
–118	M7404497P1	—	. PLATE, reinforcing	2	
–119	K7004244P1	—	. COLLAR, spacing	4	
–120	AN505–4R10	—	. SCREW, mach: Phillips drive; FH; steel, cad pl; No. 4–40; 5/8 in lg (Att. Pt. for items 118 and 119)	4	
–121	AN936B4B	—	. WASHER, lock: bronze, tinned; round, No. 4; shakeproof-type, tw ext teeth (Att. Pt. for items 113 and 119)	4	
–122	AN340–4	—	. NUT, hex: steel, cad pl; No. 4–40 (Att. Pt. for items 118 and 119)	4	
–123	K7005651P2	—	. BLOCK, pressure	1	
–124	Coml	—	. BOLT, mach: hex head; steel, cad pl; 1/4 in–20; 1-1/4 in lg (Att. Pt.) (Amer Screw)	2	
–125	AN936B416B	—	. WASHER, lock: bronze, tinned; round, 1/4 in; shakeproof-type, tw ext teeth (Att. Pt.)	2	
–126	K7005651P1	—	. BLOCK, pressure	1	
–127	AN515–416R8	—	. SCREW, mach: Phillips drive; RH; steel, cad pl; 1/4 in–20; 1/2 in lg (Att. Pt.)	2	
–128	AN936B416B	—	. WASHER, lock: bronze, tinned; round, 1/4 in; shakeproof-type, tw ext teeth (Att. Pt.)	2	
–129	P7703144P1	—	. BRACKET	1	
–130	AN520–10R8	—	. SCREW, mach: Phillips drive; RH; steel, cad pl; No. 10–32; 1/2 in lg (Att. Pt.)	4	
–131	AN936B10B	—	. WASHER, lock: bronze, tinned; round, No. 10; shakeproof-type, tw ext teeth (Att. Pt.)	4	
–132	K7005787P1	—	. GUIDE, drawer	2	
–133	AN510–10–5	—	. SCREW, mach: slot drive; FH; steel, cad pl; No. 10–32; 5/16 in lg (Att. Pt.)	6	
–134	M7480544P20F	—	. COLLAR, spacing	6	
–135	AN520–10–5	—	. SCREW, mach: slot drive; RH; steel, cad pl; No. 10–32; 5/16 in lg (Att. Pt.)	6	
–136	AN936B10B	—	. WASHER, lock: bronze, tinned; round, No. 10; shakeproof-type, tw ext teeth (Att. Pt.)	6	
–137	K7004391P1	—	. BRACKET	1	
–138	AN520–10R8	—	. SCREW, mach: Phillips drive; RH; steel, cad pl; No. 10–32; 1/2 in lg (Att. Pt.)	4	
–139	AN936B10B	—	. WASHER, lock: bronze, tinned; round, No. 10; shakeproof-type, tw ext teeth (Att. Pt.)	4	
–140	AN340–10	—	. NUT, hex: steel, cad pl; No. 10–32 (Att. Pt.)	4	
–141	ML7001501G1	—	. STUD SUBASSEMBLY	1	
–142	AN510–10–8	—	. SCREW, mach: slot drive; FH; steel, cad pl; No. 10–32; 1/2 in lg (Att. Pt.)	3	
–143	AN340–616	—	. NUT, hex: steel, cad pl; 3/8 in–16 (Att. Pt.)	4	
–144	AN960–616	—	. WASHER, flat: steel, cad pl; 3/8 in (Att. Pt.)	2	
–145	CP70B1FF805K	C2705	. CAPACITOR, fixed	1	
–146	CP70B1FF805K	C2707	. CAPACITOR, fixed	1	
–147	CP70B1FF805K	C2706	. CAPACITOR, fixed	1	
–148	CP07SC2	—	. CLAMP (Att. Pt. for items 145, 146 and 147)	6	
–149	AN345–10	—	. NUT, hex: steel, cad pl; No. 10–32 (Att. Pt. for items 145, 146 and 147)	12	
–150	AN936B10B	—	. WASHER, lock: bronze, tinned; round, No. 10; shakeproof-type, tw ext teeth (Att. Pt. for items 145, 146 and 147)	12	
	ML7404965G1	—	. COVER SUBASSEMBLY	1	
–151	AN505–10–10	—	. SCREW, mach: slot drive; FH; steel, cad pl; No. 10–32; 5/8 in lg (Att. Pt.)	1	
–152	AN505–10–8	—	. SCREW, mach: slot drive; FH; steel, cad pl; No. 10–32; 1/2 in lg (Att. Pt.)	1	
–153	AN936B10B	—	. WASHER, lock: bronze, tinned; round, No. 8; shakeproof-type, tw ext teeth (Att. Pt.)	2	
–154	AN345–10	—	. NUT, hex: steel, cad pl; No. 10–32 (Att. Pt.)	2	
–155	K7128212P1	—	. . KNOB	2	
–156	AN505–8–7	—	. . SCREW, mach: slot drive; FH; steel, cad pl; No. 8–32; 7/16 in lg (Att. Pt.)	2	
–157	AN936B8B	—	. . WASHER, lock: bronze, tinned; round, No. 8; shakeproof-type, tw ext teeth (Att. Pt.)	2	
–158	K7004687P1	—	. . BRACKET	1	
–159	K7004686P1	—	. . BRACKET	1	
–160	AN510–10–7	—	. . SCREW, mach: slot drive; FH; steel, cad pl; No. 10–32; 7/16 in lg (Att. Pt. for items 158 and 159)	2	
–161	AN936B10B	—	. . WASHER, lock: bronze, tinned; round, No. 10; shakeproof-type, tw ext teeth (Att. Pt. for items 158 and 159)	4	
–162	AN345–10	—	. . NUT, hex: steel, cad pl; No. 10–32 (Att. Pt. for items 158 and 159)	2	
–163	K7867274P21	—	. . NUT, thumb (Att. Pt. for items 158 and 159)	2	
–164	M7404966P2	—	. . PLATE, cover	1	
–165	M7404966P1	—	. . PLATE, cover	1	
	ML7403505G1	—	. SUPPORT, wave guide	1	
–166	AN520–10R8	—	. SCREW, mach: Phillips drive; RH; steel, cad pl; No. 10–32; 1/2 in lg (Att. Pt.)	4	
–167	AN936B10B	—	. WASHER, lock: bronze, tinned; round, No. 10; shakeproof-type, tw ext teeth (Att. Pt.)	4	
–168	AN345–10	—	. NUT, hex: steel, cad pl; No. 10–32 (Att. Pt.)	4	
–169	AN340–616	—	. . NUT, hex: steel, cad pl; 3/8 in–16	8	
–170	Coml	—	. . WASHER, flat: steel, cad pl; round, 13/32 in ID, 3/4 in OD, 1/16 in thk (Wrought Washer)	4	
–171	ML7001501G1	—	. . STUD SUBASSEMBLY	2	
–172	AN510–10R8	—	. . SCREW, mach: Phillips drive; FH; steel, cad pl; No. 10–32; 1/2 in lg (Att. Pt.)	6	
–173	ML7001500G1	—	. . SUPPORT, wave guide	1	
	ML7403505G2	—	. SUPPORT, wave guide	1	

FIG. & INDEX NO.	PART NUMBER	REF SYMBOL	NOMENCLATURE 1 2 3 4 5 6 7	UNITS PER ASSY	APPLI-CATION
			RECEIVER-TRANSMITTER GROUP OA–126/CPS–6B (Cont)		
2–174	AN520–10R7	—	. SCREW, mach: Phillips drive; RH; steel, cad pl; No. 10–32; 7/16 in lg (Att. Pt.)	4	
–175	AN936B10B	—	. WASHER, lock: bronze, tinned; round, No. 10; shakeproof-type, tw ext teeth (Att. Pt.)	4	
–176	AN340–616	—	. . NUT, hex: steel, cad pl; 3/8 in–16	8	
–177	Coml	—	. . WASHER, flat: steel, cad pl; round, 13/32 in ID, 3/4 in OD, 1/16 in thk (Wrought Washer)	4	
–178	ML7001501G1	—	. . STUD SUBASSEMBLY	2	
–179	AN510–10R8	—	. . SCREW, mach: Phillips drive; FH; steel, cad pl; No. 10–32; 1/2 in lg (Att. Pt.)	6	
–180	ML7403861G1	—	. . SUPPORT, wave guide	1	
–181	IN21B	CR2701	. CRYSTAL BLANK, quartz	1	
–182	K7003033P1	—	. HOLDER, crystal	1	
–183	TH15	—	. CLIP (Mallory)	1	
–184	AN515–4R6	—	. SCREW, mach: Phillips drive; RH; steel, cad pl; No. 4–40; 3/8 in lg (Att. Pt.)	2	
–185	AN936B4B	—	. WASHER, lock: bronze, tinned; round, No. 4; shakeproof-type, tw ext teeth (Att. Pt.)	2	
–186	AN340–4	—	. NUT, hex: steel, cad pl; No. 4–40 (Att. Pt.)	2	
–187	UG37A/U	J2701	. CONNECTOR, receptacle	1	
–188	AN520–10R8	—	. SCREW, mach: Phillips drive; RH; steel, cad pl; No. 10–32; 1/2 in lg (Att. Pt.)	6	
–189	AN936B10B	—	. WASHER, lock: bronze, tinned; round, No. 10; shakeproof-type, tw ext teeth (Att. Pt.)	6	
–190	AN345–10	—	. NUT, hex: steel, cad pl; No. 10–32 (Att. Pt.)	6	
–191	AN515–5–12	—	. SCREW, mach: slot drive; RH; steel, cad pl; No. 5–40; 3/4 in lg	1	
–192	AN340–5	—	. NUT, hex: steel, cad pl; No. 5–40	3	
–193	CP53B1FF504K	C2702	. CAPACITOR, fixed	1	
–194	AN515–8R6	—	. SCREW, mach: Phillips drive; RH; steel, cad pl; No. 8–32; 3/8 in lg (Att. Pt.)	2	
–195	AN936B8B	—	. WASHER, lock: bronze, tinned; round, No. 8; shakeproof-type, tw ext teeth (Att. Pt.)	2	
–196	AN340–8	—	. NUT, hex: steel, cad pl; No. 8–32 (Att. Pt.)	2	
–197	K7003617P1	—	. PLATE, mounting	1	
–198	K7893938P2	—	. NUT, hex (Att. Pt.)	2	
–199	AN936B10B	—	. WASHER, lock: bronze, tinned; round, No. 10; shakeproof-type, tw ext teeth (Att. Pt.)	2	
–200	K2795	T2701	. TRANSFORMER, pulse (GE)	1	
–201	MTSH29	—	. GASKET (Metal Textile)	1	
–202	Coml	—	. SCREW, mach: hex head; brass, cad pl; 5/16 in–18; 5/8 in lg (Att. Pt. for items 200 and 201) (Amer Screw)	8	
–203	AN936B516B	—	. WASHER, lock: bronze, tinned; round, 5/16 in; shakeproof-type, tw ext teeth (Att. Pt. for items 200 and 201)	8	
–204	AN340–516	—	. NUT, hex: steel, cad pl; 5/16 in–18 (Att. Pt. for items 200 and 201)	8	
–205	P7772570P1	—	. DISK, mounting	1	
–206	Coml	—	. SCREW, mach: hex head; brass, cad pl; 3/8 in–16; 3/4 in lg (Att. Pt.) (Amer Screw)	6	
–207	AN936B616B	—	. WASHER, lock: bronze, tinned; round, 3/8 in; shakeproof-type, tw ext teeth (Att. Pt.)	6	
–208	CP63B1FG504K	C2703	. CAPACITOR, fixed	1	
–209	CP63B1FG504K	C2704	. CAPACITOR, fixed	1	
–210	AN515–6–7	—	. SCREW, mach: slot drive; RH; steel, cad pl; No. 6–32; 7/16 in lg (Att. Pt. for items 208 and 209)	4	
–211	AN936B6B	—	. WASHER, lock: bronze, tinned; round, No. 6; shakeproof-type, tw ext teeth (Att. Pt. for items 208 and 209)	4	
–212	AN340–6	—	. NUT, hex: steel, cad pl; No. 6–32 (Att. Pt. for items 208 and 209)	4	
–213	JX65A	Z2701	. SUPPRESSOR, electrical noise (Sprague)	1	
–214	JX65A	Z2702	. SUPPRESSOR, electrical noise (Sprague)	1	
–215	7482706	T2702	. TRANSFORMER, power (GE)	1	
–216	AN515–616–12	—	. SCREW, mach: slot drive; RH; steel, cad pl; 3/8 in–16; 3/4 in lg (Att. Pt.)	4	
–217	AN936B616B	—	. WASHER, lock: bronze, tinned; round, 3/8 in; shakeproof-type, tw ext teeth (Att. Pt.)	4	
–218	AN340–616	—	. NUT, hex: steel, cad pl; 3/8 in–16 (Att. Pt.)	4	
–219	26F700	C2701	. CAPACITOR, fixed (GE)	1	
–220	AN515–416–10	—	. SCREW, mach: slot drive; RH; steel, cad pl; 1/4 in–20; 5/8 in lg (Att. Pt.)	4	
–221	AN936B416B	—	. WASHER, lock: bronze, tinned; round, 1/4 in; shakeproof-type, tw ext teeth (Att. Pt.)	4	
–222	AN340–416	—	. NUT, hex: steel, cad pl; 1/4 in–20 (Att. Pt.)	4	
–223	RW11F101	R2701	. RESISTOR, fixed	1	
–224	RW11F101	R2702	. RESISTOR, fixed	1	
–224A	RW11F102	R2710	. RESISTOR, fixed	1	
–225	ML7770257G1	—	. CLIP SET	3	
–226	AN520–10R7	—	. SCREW, mach: Phillips drive; RH; steel, cad pl; No. 10–32; 7/16 in lg (Att. Pt.)	6	
–227	AN936B10B	—	. WASHER, lock: bronze, tinned; round, No. 10; shakeproof-type, tw ext teeth (Att. Pt.)	6	
–228	ML7483056G1	—	. COVER	1	
–229	AN515–8R6	—	. SCREW, mach: Phillips drive; RH; steel, cad pl; No. 8–32; 3/8 in lg (Att. Pt.)	6	
–230	AN936B8B	—	. WASHER, lock: bronze, tinned; round, No. 8; shakeproof-type, tw ext teeth (Att. Pt.)	6	
–231	AN340–8	—	. NUT, hex: steel, cad pl; No. 8–32 (Att. Pt.)	6	
–232	UG260/U	P2702	. CONNECTOR, plug	1	
–233	UG306/U	E2702	. CONNECTOR, adapter	1	
–234	UG290/U	J2702	. CONNECTOR, receptacle	1	
–235	UG260/U	P2703	. CONNECTOR, plug	1	
–236	UG306/U	E2703	. CONNECTOR, adapter	1	
–237	UG290/U	J2703	. CONNECTOR, receptacle	1	

FIG. & INDEX NO.	PART NUMBER	REF SYMBOL	NOMENCLATURE 1 2 3 4 5 6 7	UNITS PER ASSY	APPLI-CATION
			RECEIVER-TRANSMITTER GROUP OA–127/CPS–6B (Cont)		
2–238	UG260/U	P2704	. CONNECTOR, plug	1	
–239	UG306/U	E2704	. CONNECTOR, adapter	1	
–240	UG290/U	J2704	. CONNECTOR, receptacle	1	
–241	AN520–3–4	—	. SCREW, mach: slot drive; RH; steel, cad pl; No. 3–56; 1/4 in lg (Att. Pt. for items 234, 237 and 240)	12	
–242	1103	—	. WASHER, lock (Att. Pt. for items 234, 237 and 240) (Shakeproof)	12	
–243	NP137410G	—	. MARKER, cable	1	
–244	NP137410H	—	. MARKER, cable	1	
–245	NP137410J	—	. MARKER, cable	1	
	ML7000669G1	—	. RESISTOR ASSEMBLY, fixed	1	
–246	AN515–8R4	—	. SCREW, mach: Phillips drive; RH; steel, cad pl; No. 8–32; 1/4 in lg (Att. Pt.)	4	
–247	AN936B8B	—	. WASHER, lock: bronze, tinned; round, No. 8; shakeproof-type, tw ext teeth (Att. Pt.)	4	
–248	RC30BF151J	R2703	. . RESISTOR, fixed	1	
–249	RC30BF101J	R2704	. . RESISTOR, fixed	1	
–250	RC30BF680J	R2705	. . RESISTOR, fixed	1	
–251	RC30BF151J	R2706	. . RESISTOR, fixed	1	
–252	RC30BF101J	R2707	. . RESISTOR, fixed	1	
–253	RC30BF680J	R2708	. . RESISTOR, fixed	1	
	ML7000670G1	—	. . BOARD, terminal	1	
–254	K7000670P2	—	. . . PANEL	1	
–255	T100–3	—	. . . TERMINAL, stud (Bead Chain)	12	
–256	M7480544P17B	—	. POST, spacing	4	
–257	AN515–8R4	—	. SCREW, mach: Phillips drive; RH; steel, cad pl; No. 8–32; 1/4 in lg (Att. Pt.)	4	
–258	AN936B8B	—	. WASHER, lock: bronze, tinned; round, No. 8; shakeproof-type, tw ext teeth (Att. Pt.)	4	
–259	M2R53P4	—	. GROMMET	1	
–260	M7403966P1	—	. SHAFT ASSEMBLY	1	
–261	ML7000661G1	—	. BRACKET	2	
–262	AN520–10R8	—	. SCREW, mach: Phillips drive; RH; steel, cad pl; No. 10–32; 1/2 in lg (Att. Pt.)	4	
–263	AN936B10B	—	. WASHER, lock: bronze, tinned; round, No. 10; shakeproof-type, tw ext teeth (Att. Pt.)	4	
–264	AN345–10	—	. NUT, hex: steel, cad pl; No. 10–32 (Att. Pt.)	4	
–265	ML7460330G2	S2711A	. SWITCH, interlock	1	
–266	ML7460330G2	S2701A	. SWITCH, interlock	1	
–267	ML7460330G2	S2716A	. SWITCH, interlock	1	
–268	ML7460330G2	S2707A	. SWITCH, interlock	1	
–269	K7861392P1	—	. INSULATOR, plate	4	
–270	AN515–6R18	—	. SCREW, mach: Phillips drive; RH; steel, cad pl; No. 6–32; 1-1/8 in lg (Att. Pt. for items 265 thru 269)	8	
–271	AN936B6B	—	. WASHER, lock: bronze, tinned; round, No. 6; shakeproof-type, tw ext teeth (Att. Pt. for items 265 thru 269)	8	
–272	AN340–6	—	. NUT, hex: steel, cad pl; No. 6–32 (Att. Pt. for items 265 thru 269)	8	
–273	K7003398P1	—	. PLATE, angle	1	
–274	K7003398P2	—	. PLATE, angle	1	
–275	AN515–6R7	—	. SCREW, mach: Phillips drive; RH; steel, cad pl; No. 6–32; 7/16 in lg (Att. Pt. for items 273 and 274)	4	
–276	AN936B6B	—	. WASHER, lock: bronze, tinned; round, No. 6; shakeproof-type, tw ext teeth (Att. Pt. for items 273 and 274)	4	
–277	AN340–6	—	. NUT, hex: steel, cad pl; No. 6–32 (Att. Pt. for items 273 and 274)	4	
–278	ST22N	S2702	. SWITCH, toggle	1	
–279	ST22N	S2712	. SWITCH, toggle	1	
–280	ST22N	S2706	. SWITCH, toggle	1	
–281	ST22N	S2708	. SWITCH, toggle	1	
–282	ST22N	S2710	. SWITCH, toggle	1	
–283	1222–1	—	. WASHER, lock (Att. Pt. for items 278 thru 282) (Shakeproof)	5	
–284	K7002858P1	—	. BRACKET	2	
–285	AN510–10R6	—	. SCREW, mach: Phillips drive; FH; steel, cad pl; No. 10–32; 3/8 in lg (Att. Pt.)	4	
–286	AN936B10B	—	. WASHER, lock: bronze, tinned; round, No. 10; shakeproof-type, tw ext teeth (Att. Pt.)	4	
–287	K7893938P2	—	. NUT, hex (Att. Pt.)	4	
–288	K7004390P1	—	. PLATE, mounting	2	
–289	AN515–6R7	—	. SCREW, mach: Phillips drive; RH; steel, cad pl; No. 6–32; 7/16 in lg (Att. Pt.)	2	
–290	AN515–6R4	—	. SCREW, mach: Phillips drive; RH; steel, cad pl; No. 6–32; 1/4 in lg (Att. Pt.)	2	
–291	AN936B6B	—	. WASHER, lock: bronze, tinned; round, No. 6; shakeproof-type, tw ext teeth (Att. Pt.)	4	
–292	M2R53P5	—	. GROMMET	1	
	ML7403530G1	—	. PANEL	1	
–293	K7126123P1	—	. . SCREW, captive	6	
–294	K7128235P2	—	. . BUSHING	6	
–295	K7002870P1	—	. . HANDLE	2	
–296	K7002869P1	—	. . WASHER, extruded	4	
–297	AN345–10	—	. . NUT, hex: steel, cad pl; No. 10–32 (Att. Pt. for items 295 and 296)	4	
–298	AN936B10B	—	. . WASHER, lock: bronze, tinned; round, No. 10; shakeproof-type, tw ext teeth (Att. Pt. for items 295 and 296)	4	
–299	M7403531P1	—	. . PANEL	1	
–300	MSX8–141	TB2709	. BOARD, terminal (Jones HB)	1	
–301	MSX12–141	TB2701	. BOARD, terminal (Jones HB)	1	
–302	MSX12–141	TB2702	. BOARD, terminal (Jones HB)	1	
–303	MSX12–141	TB2703	. BOARD, terminal (Jones HB)	1	
–304	MSX12–141	TB2704	. BOARD, terminal (Jones HB)	1	
–305	MSX12–141	TB2705	. BOARD, terminal (Jones HB)	1	
–306	MSX12–141	TB2706	. BOARD, terminal (Jones HB)	1	

FIG. & INDEX NO.	PART NUMBER	REF SYMBOL	NOMENCLATURE 1 2 3 4 5 6 7	UNITS PER ASSY	APPLI-CATION
			RECEIVER-TRANSMITTER GROUP OA–126/CPS–6B (Cont)		
2–307	AN515–6R12	—	. SCREW, mach: Phillips drive; RH; steel, cad pl; No. 6–32; 3/4 in lg (Att. Pt. for items 300 thru 306)	28	
–308	AN936B6B	—	. WASHER, lock: bronze, tinned; round, No. 6; shakeproof-type, tw ext teeth (Att. Pt. for items 300 thru 306)	28	
–309	AN340–6	—	. NUT, hex: steel, cad pl; No. 6–32 (Att. Pt. for items 300 thru 306)	28	
–310	AN515–6R4	—	. SCREW, mach: Phillips drive; RH; steel, cad pl; No. 6–32; 1/4 in lg	160	
–311	AN936B6B	—	. WASHER, lock: bronze, tinned; round, No. 6; shakeproof-type, tw ext teeth	160	
	ML7001547G1	TB2707	. BOARD, terminal	1	
–312	AN515–8–12	—	. SCREW, mach: slot drive; RH; steel, cad pl; No. 8–32; 3/4 in lg (Att. Pt.)	2	
–313	AN936B8B	—	. WASHER, lock: bronze, tinned; round, No. 8; shakeproof-type, tw ext teeth (Att. Pt.)	2	
–314	AN340–8	—	. NUT, hex: steel, cad pl; No. 8–32 (Att. Pt.)	2	
–315	K7001545P1	—	. . BAR, bus	1	
–316	AN515–6–6	—	. . SCREW, mach: slot drive; RH; steel, cad pl; No. 6–32; 3/8 in lg (Att. Pt.)	4	
–317	AN936B6B	—	. . WASHER, lock: bronze, tinned; round, No. 6; shakeproof-type, tw ext teeth (Att. Pt.)	4	
–318	K7001546P1	—	. . BLOCK, spacing	2	
–319	K7005041P1	—	. . PLATE, insulating	1	
–320	AN515–6–6	—	. . SCREW, mach: slot drive; RH; steel, cad pl; No. 6–32; 3/8 in lg (Att. Pt.)	2	
–321	AN936B6B	—	. . WASHER, lock: bronze, tinned; round, No. 6; shakeproof-type, tw ext teeth (Att. Pt.)	2	
–322	AN520–10R5	—	. SCREW, mach: Phillips drive; RH; steel, cad pl; No. 10–32; 5/16 in lg	12	
–323	AN936A10B	—	. WASHER, lock: bronze, tinned; round, No. 10; shakeproof-type, tw int teeth	12	
–324	K7001545P1	TB2708	. BOARD, terminal	1	
–325	K7001545P1	TB2710	. BOARD, terminal	1	
–326	AN515–6R4	—	. SCREW, mach: Phillips drive; RH; steel, cad pl; No. 6–32; 1/4 in lg (Att. Pt. for items 324 and 325)	8	
–327	AN936B6B	—	. WASHER, lock: bronze, tinned; round, No. 6; shakeproof-type, tw ext teeth (Att. Pt. for items 324 and 325)	8	
–328	AN520–10R5	—	. SCREW, mach: Phillips drive; RH; steel, cad pl; No. 10–32; 5/16 in lg	24	
–329	AN936A10B	—	. WASHER, lock: bronze, tinned; round, No. 10; shakeproof-type, tw int teeth	24	
–330	K7007419P1	—	. POST, spacing	2	
–331	M7480544P8B	—	. POST, spacing	4	
–332	AN515–6R4	—	. SCREW, mach: Phillips drive; RH; steel, cad pl; No. 6–32; 1/4 in lg (Att. Pt. for items 330 and 331)	8	
–333	AN936B6B	—	. WASHER, lock: bronze, tinned; round, No. 6; shakeproof-type, tw ext teeth (Att. Pt. for items 330 and 331)	8	
–334	M2R53P25	—	. GROMMET	3	
–335	C1149	J2716	. CONNECTOR, receptacle (Buggie)	1	
–336	C1126	J2717	. CONNECTOR, receptacle (Buggie)	1	
–337	C1128	J2718	. CONNECTOR, receptacle (Buggie)	1	
–338	C1126	J2719	. CONNECTOR, receptacle (Buggie)	1	
–339	T7665291P1	—	. MOUNTING, bracket	1	
–340	AN520–10R7	—	. SCREW, mach: Phillips drive; RH; steel, cad pl; No. 10–32; 7/16 in lg (Att. Pt.)	6	
–341	AN936B10B	—	. WASHER, lock: bronze, tinned; round, No. 10; shakeproof-type, tw ext teeth (Att. Pt.)	6	
–342	P7703082P1	—	. PLATE, mounting	1	
–343	AN520–10R7	—	. SCREW, mach: Phillips drive; RH; steel, cad pl; No. 10–32; 7/16 in lg (Att. Pt.)	5	
–344	AN936B10B	—	. WASHER, lock: bronze, tinned; round, No. 10; shakeproof-type, tw ext teeth (Att. Pt.)	5	
–345	UG306/U	E2720	. CONNECTOR, adapter	1	
–346	UG306/U	E2721	. CONNECTOR, adapter	1	
–347	UG306/U	E2722	. CONNECTOR, adapter	1	
–348	CW–123/U	—	. CAP AND CHAIN SUBASSEMBLY	2	
–349	UG262/U	J2727	. CONNECTOR, receptacle	1	
–350	UG262/U	J2726	. CONNECTOR, receptacle	1	
–351	UG262/U	J2720	. CONNECTOR, receptacle	1	
–352	UG262/U	J2721	. CONNECTOR, receptacle	1	
–353	UG262/U	J2722	. CONNECTOR, receptacle	1	
–354	AN520–3–5	—	. SCREW, mach: slot drive; RH; steel ,cad pl; No. 3–56; 5/16 in lg (Att. Pt. for items 348 thru 353)	20	
–355	1103	—	. WASHER, lock (Att. Pt. for items 348 thru 353) (Shakeproof)	20	
–356	ML7772578G1	—	. PLATE SUBASSEMBLY, cover	1	
–357	AN520–10–6	—	. SCREW, mach: slot drive; RH; steel, cad pl; No. 10–32; 3/8 in lg (Att. Pt.)	14	
–358	AN936B10B	—	. WASHER, lock: bronze, tinned; round, No. 10; shakeproof-type, tw ext teeth (Att. Pt.)	14	
–359	AN345–10	—	. NUT, hex: steel, cad pl; No. 10–32 (Att. Pt.)	8	
–360	P7700708P1	B2702	. BLOWER (See Figure 54 for breakdown)	1	
–361	Coml	—	. SCREW, mach: hex head; brass, cad pl; 5/16 in–18; 3/4 in lg (Att. Pt.) (Amer Screw)	4	
–361A	Coml	—	. WASHER, flat: brass, cad pl; round, 5/16 in ID, 3/4 in OD, 0.063 in thk (Att. Pt.) (Wrought Washer)	8	
–362	AN936B516B	—	. WASHER, lock: bronze, tinned; round, 5/16 in; shakeproof-type, tw ext teeth (Att. Pt.)	4	
–363	AN340–516	—	. NUT, hex: steel, cad pl; 5/16 in–18 (Att. Pt.)	4	
–364	3302	—	. CLAMP (Thomas & Betts)	1	
–365	P7700653P1	—	. MOUNTING, bracket	1	
–366	AN515–416–10	—	. SCREW, mach: slot drive; RH; steel, cad pl; 1/4 in–20; 5/8 in lg (Att. Pt.)	3	
–367	AN505–416R10	—	. SCREW, mach: Phillips drive; FH; steel, cad pl; 1/4 in–20; 5/8 in lg (Att. Pt.)	3	
–368	AN936B416B	—	. WASHER, lock: bronze, tinned; round, 1/4 in; shakeproof-type, tw ext teeth (Att. Pt.)	6	
–369	AN340–416	—	. NUT, hex: steel, cad pl; 1/4 in–20 (Att. Pt.)	6	
–370	ML7772566G1	—	. DUCT	1	
–371	M7403529P2	—	. CLEANER, air	1	

FIG. & INDEX NO.	PART NUMBER	REF SYMBOL	NOMENCLATURE 1 2 3 4 5 6 7	UNITS PER ASSY	APPLI-CATION
			RECEIVER-TRANSMITTER GROUP OA–126/CPS–6B (Cont)		
2–372	UG290/U	—	. CONNECTOR, receptacle	3	
–373	AN515–3R5	—	. SCREW, mach: Phillips drive; RH; steel, cad pl; No. 3–56; 5/16 in lg (Att. Pt.)	12	
–374	1203	—	. WASHER, lock: steel, cad pl; round, No. 3; shakeproof-type, tw ext teeth (Att. Pt.) (Shakeproof)	12	
–375	9718122	—	. CONNECTOR, receptacle (Amphenol)	2	
–376	AN515–4R6	—	. SCREW, mach: Phillips drive; RH; steel, cad pl; No. 4–40; 3/8 in lg (Att. Pt.)	8	
–377	AN936B4B	—	. WASHER, lock: bronze, tinned; round, No. 4; shakeproof-type, tw ext teeth (Att. Pt.)	8	
–378	AN340–4	—	. NUT, hex: steel, cad pl; No. 4–40 (Att. Pt.)	8	
–379	1B58	V2501	. TUBE, electron	1	
–380	AN520–10R6	—	. SCREW, mach: Phillips drive; RH; steel, cad pl; No. 10–32; 3/8 in lg (Att. Pt.)	4	
–381	AN935–10	—	. WASHER, lock: steel, cad pl; No. 10 (Att. Pt.)	4	
–382	1B44	V2503	. TUBE, electron	1	
–383	1B44	V2504	. TUBE, electron	1	
–384	1N21C	CR2501	. CRYSTAL BLANK, quartz	1	
–385	1N21B	CR2502	. CRYSTAL BLANK, quartz	1	
–386	ML7460330G2	S2713A	. SWITCH, interlock	1	
–387	ML7460330G2	S2714A	. SWITCH, interlock	1	
–388	ML7460330G2	S2715A	. SWITCH, interlock	1	
–389	ML7460330G2	S2705A	. SWITCH, interlock	1	
–390	ML7460330G2	S2717A	. SWITCH, interlock	1	
–391	ML7460330G2	S2709A	. SWITCH, interlock	1	
–392	K7861392P1	—	. INSULATOR, plate	6	
–393	AN515–6R20	—	. SCREW, mach: Phillips drive; RH; steel, cad pl; No. 6–32; 1-1/4 in lg (Att. Pt. for items 386 thru 392)	12	
–394	AN936B6B	—	. WASHER, lock: bronze, tinned; round, No. 6; shakeproof-type, tw ext teeth (Att. Pt. for items 386 thru 392)	12	
–395	AN340–6	—	. NUT, hex: steel, cad pl; No. 6–32 (Att. Pt. for items 386 thru 392)	12	
–396	ST22N	S2718	. SWITCH, toggle	1	
–397	1222–1	—	. WASHER, lock (Att. Pt.) (Shakeproof)	1	
–398	AN3057–16	—	. CLAMP	1	
–399	AN3106–28–2S	P2801	. CONNECTOR, plug	1	
–400	NP137426A	—	. MARKER, cable	1	
–401	MJB1/200	F2701	. FUSE, cartridge (Buss)	1	
–402	UG18/U	P2502	. CONNECTOR, plug	1	
–403	NP140304A	—	. MARKER, cable	1	
–404	UG27A/U	E2503	. CONNECTOR, adapter	1	
–405	UG18/U	P2503	. CONNECTOR, plug	1	
–406	NP140304C	—	. MARKER, cable	1	
–407	UG18/U	P2504	. CONNECTOR, plug	1	
–408	NP140304B	—	. MARKER, cable	1	
	ML7004274G2	—	. CABLE ASSEMBLY, RF	1	
–409	No Number	P2710	. . CONNECTOR, plug (K7004272P1, K7004273P1, K7876696P35 and K7898703P1, assembled)	1	
–410	P7770419P235	R2709	. . RESISTOR, fixed	1	
	ML7008157G1	W2702	. CABLE ASSEMBLY, RF	1	
–411	RG71/U	—	. . CABLE, RF: 9-1/2 in lg	1	
–412	UG260/U	P102	. . CONNECTOR, plug	1	
–413	UG260/U	P2708	. . CONNECTOR, plug	1	
–414	NP144324R	—	. . MARKER, cable	1	
–414A	NP137410L	—	. . MARKER, cable	1	
–414B	NP137410R	—	. . MARKER, cable	1	
–415	AN3057–6	—	. CLAMP	1	
–416	AN3108–14S5S	P103	. CONNECTOR, plug	1	
–417	NP137426V	—	. MARKER, cable	1	
–418	P7703143P1	—	. COVER	1	
–419	AN520–10R7	—	. SCREW, mach: Phillips drive; RH; steel, cad pl; No. 10–32; 7/16 in lg (Att. Pt.)	14	
–420	AN936B10B	—	. WASHER, lock: bronze, tinned; round, No. 10; shakeproof-type, tw ext teeth (Att. Pt.)	14	
–421	AN3057–6	—	. CLAMP	1	
–422	AN3106–14SP5	P2706	. CONNECTOR, plug	1	
–423	NP137426G	—	. MARKER, cable	1	
	ML7008158G1	W2701	. CABLE ASSEMBLY, RF	1	
–424	RG59/U	—	. . CABLE, RF: 11-1/2 in lg	1	
–425	UG260/U	P101	. . CONNECTOR, plug	1	
–426	UG260/U	P2707	. . CONNECTOR, plug	1	
–427	NP144324P	—	. . MARKER, cable	1	
–427A	NP137410K	—	. . MARKER, cable	1	
–427B	NP137410P	—	. . MARKER, cable	1	
–428	AN3102–14S5S	J2706	. CONNECTOR, receptacle	1	
–429	AN3102–16–10S	J2728	. CONNECTOR, receptacle	1	
–430	AN515–4R6	—	. SCREW, mach: Phillips drive; RH; steel, cad pl; No. 4–40; 3/8 in lg (Att. Pt. for items 428 and 429)	8	
–431	AN936B4B	—	. WASHER, lock: bronze, tinned; round, No. 4; shakeproof-type, tw ext teeth (Att. Pt. for items 428 and 429)	8	
–432	AN340–4	—	. NUT, hex: steel, cad pl; No. 4–40 (Att. Pt. for items 428 and 429)	8	
–433	UG262/U	J2707	. CONNECTOR, receptacle	1	
–434	UG262/U	J2708	. CONNECTOR, receptacle	1	
–435	AN520–3–4	—	. SCREW, mach: slot drive; RH; steel, cad pl; No. 3–56; 1/4 in lg (Att. Pt. for items 433 and 434)	8	
–436	1103	—	. WASHER, lock (Att. Pt. for items 433 and 434) (Shakeproof)	8	
–437	UG18/U	P2724	. CONNECTOR, plug	1	
–438	NP137417B	—	. MARKER, cable	1	
–439	UG27A/U	E2724	. CONNECTOR, adapter	1	

FIG. & INDEX NO.	PART NUMBER	REF SYMBOL	NOMENCLATURE 1 2 3 4 5 6 7	UNITS PER ASSY	APPLI-CATION
			RECEIVER-TRANSMITTER GROUP OA–126/CPS–6B (Cont)		
2–440	UG18/U	P2725	. CONNECTOR, plug	1	
–441	NP137417C	—	. MARKER, cable	1	
–442	UG27A/U	E2725	. CONNECTOR, adapter	1	
–443	UG19/U	J2724	. CONNECTOR, receptacle	1	
–444	UG19/U	J2725	. CONNECTOR, receptacle	1	
–445	AN515–4R6	—	. SCREW, mach: Phillips drive; RH; steel, cad pl; No. 4–40; 3/8 in lg (Att. Pt. for items 443 and 444)	8	
–446	AN936B4B	—	. WASHER, lock: bronze, tinned; round, No. 4; shakeproof-type, tw ext teeth (Att. Pt. for items 443 and 444)	8	
–447	AN340–4	—	. NUT, hex: steel, cad pl; No. 4–40 (Att. Pt. for items 443 and 444)	8	
–448	97–3057–10–6	—	. CLAMP (Amphenol)	1	
–449	AN3106–18–16P	P3502	. CONNECTOR, plug	1	
–450	NP137426E	—	. MARKER, cable	1	
–451	AN3057–10	—	. CLAMP	1	
–452	AN3106–18–16	P3503	. CONNECTOR, plug	1	
–453	NP137426F	—	. MARKER, cable	1	
–454	AN3057–8	—	. CLAMP	1	
–455	AN3106–16–10S	P3501	. CONNECTOR, plug	1	
–456	NP137426D	—	. MARKER, cable	1	
–457	UG18/U	P711	. CONNECTOR, plug	1	
–458	NP137427A	—	. MARKER, cable	1	
–459	UG18/U	P715	. CONNECTOR, plug	1	
–460	NP137427B	—	. MARKER, cable	1	
–461	CW–123/U	—	. CAP AND CHAIN SUBASSEMBLY	2	
–462	UG262/U	J2712	. CONNECTOR, receptacle	1	
–463	UG262/U	J2713	. CONNECTOR, receptacle	1	
–464	AN520–3–5	—	. SCREW, mach: slot drive; RH; steel, cad pl; No. 3–56; 5/16 in lg (Att. Pt. for items 461, 462 and 463)	8	
–465	1103	—	. WASHER, lock (Att. Pt. for items 461, 462 and 463) (Shakeproof)	8	
	ML7003043G1	E2714	. CONNECTOR SUBASSEMBLY	1	
–466	9760–12	—	. . CAP AND CHAIN SUBASSEMBLY (Amphenol)	1	
–467	AN3106–14S5P	—	. . CONNECTOR, plug	1	
–468	9760–22	—	. CAP AND CHAIN SUBASSEMBLY (Amphenol)	1	
–469	AN3057–16	—	. CLAMP	1	
–470	AN3106–16–10P	P2709	. CONNECTOR, plug	1	
–471	NP137426H	—	. MARKER, cable	1	
–472	AN3102–16–10S	J2709	. CONNECTOR, receptacle	1	
–473	AN3102–22–33S	J2715	. CONNECTOR, receptacle	1	
–474	AN3102–14S5S	J2714	. CONNECTOR, receptacle	1	
–475	AN515–4R6	—	. SCREW, mach: Phillips drive; RH; steel, cad pl; No. 4–40; 3/8 in lg (Att. Pt. for items 472, 473 and 474)	12	
–476	AN936B4B	—	. WASHER, lock: bronze, tinned; round, No. 4; shakeproof type, tw ext teeth (Att. Pt. for items 472, 473 and 474)	12	
–477	AN340–4	—	. NUT, hex: steel, cad pl; No. 4–40 (Att. Pt. for items 472, 473 and 474)	12	
–478	AN3108–28–2S	P719	. CONNECTOR, plug	1	
–479	NP137427C	—	. MARKER, cable	1	
–480	UG18/U	P701	. CONNECTOR, plug	1	
–481	NP137417D	—	. MARKER, cable	1	
	ML7008156G1	W2719	. CABLE ASSEMBLY, RF	1	
–482	RG55/U	—	. . CABLE, RF: 20-1/2 in lg	1	
–483	UG88/U	P602	. . CONNECTOR, plug	1	
–484	UG88/U	P702	. . CONNECTOR, plug	1	
–485	NP144324S	—	. . MARKER, cable	1	
–485A	NP137410B1	—	. . MARKER, cable	1	
–485B	NP137410A1	—	. . MARKER, cable	1	
–486	UG260/U	P603	. CONNECTOR, plug	1	
–487	NP137410C1	—	. MARKER, cable	1	
–488	UG260/U	P604	. CONNECTOR, plug	1	
–489	NP137410D1	—	. MARKER, cable	1	
–490	AN3057–12	—	. CLAMP	2	
–491	AN3106–22–33S	P605	. CONNECTOR, plug	1	
–492	NP137427D	—	. MARKER, cable	1	
–493	AN3106–22–33S	P606	. CONNECTOR, plug	1	
–494	NP137427E	—	. MARKER, cable	1	
–495	UG260/U	P2207	. CONNECTOR, plug	1	
–496	NP137410Z	—	. MARKER, cable	1	
–497	UG260/U	P302	. CONNECTOR, plug	1	
–498	NP137410S	—	. MARKER, cable	1	
–499	UG260/U	P305	. CONNECTOR, plug	1	
–500	NP137410V	—	. MARKER, cable	1	
–501	UG260/U	P2204	. CONNECTOR, plug	1	
–502	NP137410W	—	. MARKER, cable	1	
–503	AN3106–14S5P	P2203	. CONNECTOR, plug	1	
–504	NP137426Z	—	. MARKER, cable	1	
–505	AN3106–22–33S	P2201	. CONNECTOR, plug	1	
–506	NP137426X	—	. MARKER, cable	1	
–507	AN3106–28–2S	P2202	. CONNECTOR, plug	1	
–508	NP137426Y	—	. MARKER, cable	1	
–509	AN3106–22–23P–	P3001	. CONNECTOR, plug	1	
–510	NP140089A	—	. MARKER, cable	1	
–511	AN3057–16	—	. CLAMP	1	
–512	AN3106–28–2S	P3002	. CONNECTOR, plug	1	
–513	NP137426B	—	. MARKER, cable	1	
–514	AN3057–20	—	. CLAMP	2	

FIG. & INDEX NO.	PART NUMBER	REF SYMBOL	NOMENCLATURE 1 2 3 4 5 6 7	UNITS PER ASSY	APPLI-CATION
			RECEIVER-TRANSMITTER GROUP OA–126/CPS–6B (Cont)		
2–515	AN3106–32–12S	P3201	. CONNECTOR, plug	1	
–516	NP137426P	—	. MARKER, cable	1	
–517	AN3106–32–12P	P3202	. CONNECTOR, plug	1	
–518	NP137426R	—	. MARKER, cable	1	
–519	AN3106–22–33P	P3203	. CONNECTOR, plug	1	
–520	NP137426S	—	. MARKER, cable	1	
–521	AN3106–22–33P	P3204	. CONNECTOR, plug	1	
–522	NP137426T	—	. MARKER, cable	1	
–523	AN3106–22–33P	P3206	. CONNECTOR, plug	1	
–524	NP137426U	—	. MARKER, cable	1	
			RECEIVER-TRANSMITTER GROUP OA–127/CPS–6B		
3–	ML7353300G2	—	RECEIVER-TRANSMITTER GROUP OA–127/CPS–6B	1	
–1	672	—	. SLOTTED LINE IM–23/U (See Figure 7 for breakdown) (Polytechnic Research & Development)	1	
–2	Coml	—	. SCREW, mach: hex head; brass, cad pl; 1/4 in–20; 1-3/4 in lg (Att. Pt.) (Amer Screw)	8	
–3	AN936B416B	—	. WASHER, lock: bronze, tinned; round, 1/4 in; shakeproof-type, tw ext teeth (Att. Pt.)	8	
–4	D1056–165	—	. DUPLEXER CU–193/CPS–6B (See Figure 9 for breakdown) (Terpening)	1	
–5	AN520–10R10	—	. SCREW, mach: Phillips drive; RH; steel, cad pl; No. 10–32; 5/8 in lg (Att. Pt.)	8	
–6	AN936B10B	—	. WASHER, lock: bronze, tinned; round, No. 10; shakeproof-type, tw ext teeth (Att. Pt.)	8	
–7	AN345–10	—	. NUT, hex: steel, cad pl; No. 10–32 (Att. Pt.)	8	
–8	ML7352780G1	—	. FREQUENCY CONTROL C–595/CPS–6B (See Figure 22 for breakdown)	1	
–9	ML7664491G1	—	. IF AMPLIFIER AM–304/CPS–6B (See Figure 26 for breakdown)	1	
–10	ML7664492G1	—	. POWER SUPPLY PP–460/CPS–6B (See Figure 27 for breakdown)	1	
–11	AN520–10R7	—	. SCREW, mach: Phillips drive; RH; steel, cad pl; No. 10–32; 7/16 in lg (Att. Pt.)	8	
–12	AN936B10B	—	. WASHER, lock: bronze, tinned; round, No. 10; shakeproof-type, tw ext teeth (Att. Pt.)	8	
–13	AN345–10	—	. NUT, hex: steel, cad pl; No. 10–32 (Att. Pt.)	8	
–14	ML7354003G1	—	. RF OSCILLATOR O–94/CPS–6B (See Figure 28 for breakdown)	1	
–15	ML7352793G1	—	. RECEIVER CONTROL C–596/CPS–6B (See Figure 35 for breakdown)	1	
–16	ML7353055G1	—	. VOLTAGE REGULATOR CN–103/CPS–6B (See Figure 38 for breakdown)	1	
–17	ML7353057G1	—	. POWER SUPPLY PP–459/CPS–6B (See Figure 39 for breakdown)	1	
–18	ML7354006G1	—	. RADAR RECEIVER R–307/CPS–6B (See Figure 40 for breakdown)	1	
–19	ML7353099G1	—	. FRAME (See Figure 55 for breakdown)	1	
–20	NP140325	—	. PLATE, identification	1	
–21	NP140020C	—	. PLATE, identification	1	
–22	Coml	—	. SCREW, self-tapping: Phillips drive; Bind H; SS; No. 4–40; 1/4 in lg (Att. Pt. for items 20 and 21) (Shakeproof)	8	
–23	QK229/RK5657	V2702	. TUBE, electron	1	
–24	AN520–10R8	—	. SCREW, mach: Phillips drive; RH; steel, cad pl; No. 10–32; 1/2 in lg (Att. Pt.)	8	
–25	AN936B10B	—	. WASHER, lock: bronze, tinned; round, No. 10; shakeproof-type, tw ext teeth (Att. Pt.)	8	
–26	T7665292P2	—	. COUPLING UNIT, wave guide	1	
–27	AN515–416R14	—	. SCREW, mach: Phillips drive; RH; steel, cad pl; 1/4 in–20; 7/8 in lg (Att. Pt.)	8	
–28	AN936B416B	—	. WASHER, lock: bronze, tinned; round, 1/4 in; shakeproof-type, tw ext teeth (Att. Pt.)	8	
–29	AN340–416	—	. NUT, hex: steel, cad pl; 1/4 in–20 (Att. Pt.)	8	
–30	Coml	—	. SCREW, eye: steel, cad pl; 1/2 in–13; 7/16 in lg; machine screw thread; straight angle round eye; 7/16 in ID (Amer Screw)	4	
–31	AN335–8	—	. NUT, hex: steel, cad pl; 1/2 in–13 (Att. Pt.)	4	
–32	K7005270P1	—	. CHAIN ASSEMBLY	1	
–33	AN505–8–7	—	. SCREW, mach: slot drive; FH; steel, cad pl; No. 8–32; 7/16 in lg (Att. Pt.)	1	
–34	AN515–8–5	—	. SCREW, mach: slot drive; RH; steel, cad pl; No. 8–32; 5/16 in lg (Att. Pt.)	2	
–35	AN936B8B	—	. WASHER, lock: bronze, tinned; round, No. 8; shakeproof-type, tw ext teeth (Att. Pt.)	3	
–36	AN340–8	—	. NUT, hex: steel, cad pl; No. 8–32 (Att. Pt.)	3	
–37	K7005270P1	—	. CHAIN ASSEMBLY	1	
–38	AN505–8–7	—	. SCREW, mach: slot drive; FH; steel, cad pl; No. 8–32; 7/16 in lg (Att. Pt.)	1	
–39	AN515–8–5	—	. SCREW, mach: slot drive; RH; steel, cad pl; No. 8–32; 5/16 in lg (Att. Pt.)	2	
–40	AN936B8B	—	. WASHER, lock: bronze, tinned; round, No. 8; shakeproof-type, tw ext teeth (Att. Pt.)	3	
–41	AN340–8	—	. NUT, hex: steel, cad pl; No. 8–32 (Att. Pt.)	3	
–42	ML7772591G1	—	. DOOR (See Figure 49 for breakdown)	1	
–43	ML7772590G1	—	. DOOR (See Figure 50 for breakdown)	1	
–44	ML7772598G1	—	. DOOR (See Figure 51 for breakdown)	1	
–45	ML7772592G1	—	. DOOR (See Figure 52 for breakdown)	1	
–46	AN515–8R4	—	. SCREW, mach: Phillips drive; RH; steel, cad pl; No. 8–32; 1/4 in lg (Att. Pt. for items 42 thru 45)	23	
–47	AN936B8B	—	. WASHER, lock: bronze, tinned; round, No. 8; shakeproof-type, tw ext teeth (Att. Pt. for items 42 thru 45)	23	
–48	K7002269P2	—	. BRACKET	2	
–49	AN520B10R7	—	. SCREW, mach: Phillips drive; RH; brass, black oxidized; No. 10–32; 7/16 in lg (Att. Pt.)	4	
–50	1910	—	. WASHER, lock (Att. Pt.) (Shakeproof)	4	
–51	AN345–10	—	. NUT, hex: steel, cad pl; No. 10–32 (Att. Pt.)	4	

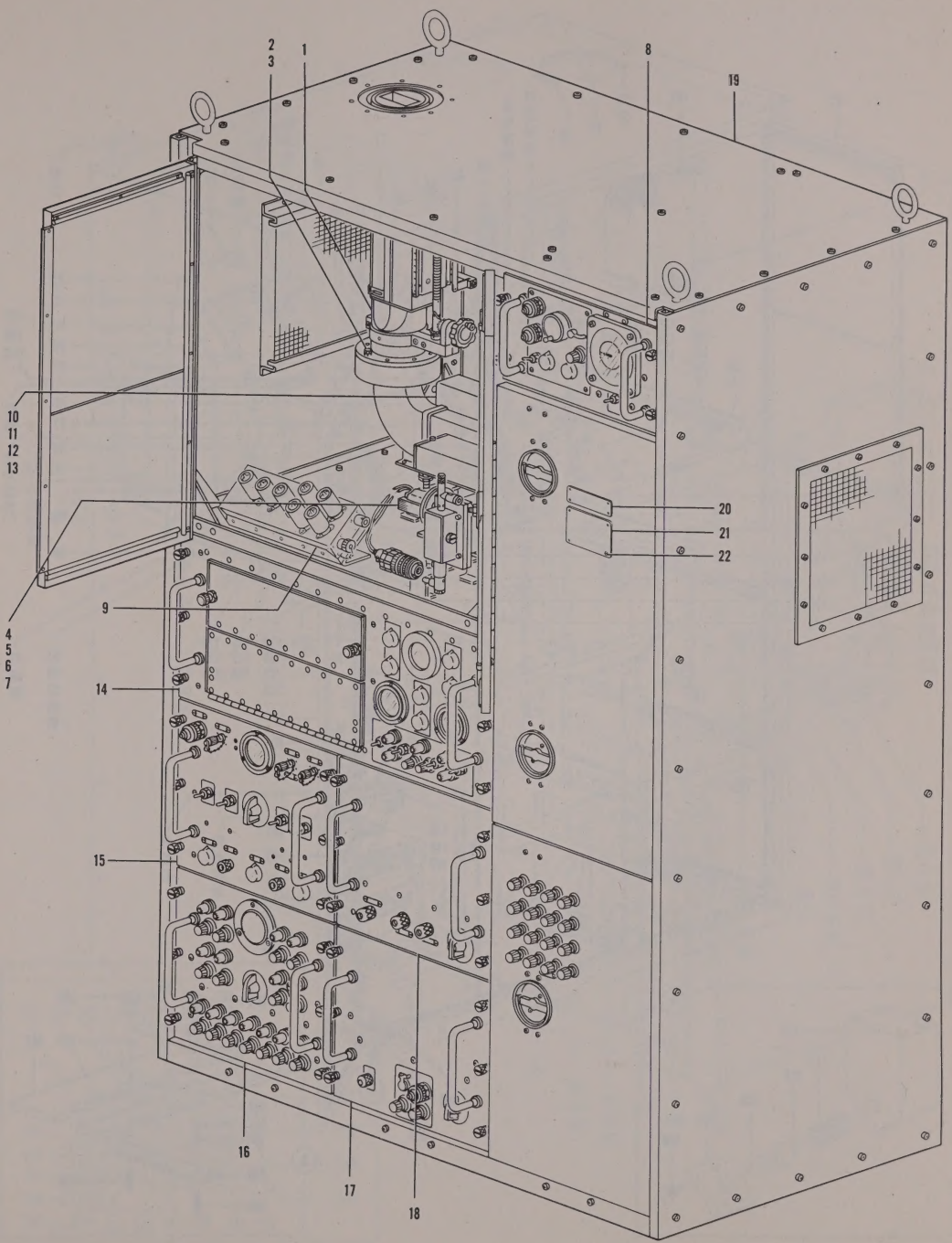

Figure 3. Receiver-Transmitter Group OA–127/CPS–6B, Front View (Sheet 1 of 5 sheets, Index Nos. 1 thru 22)

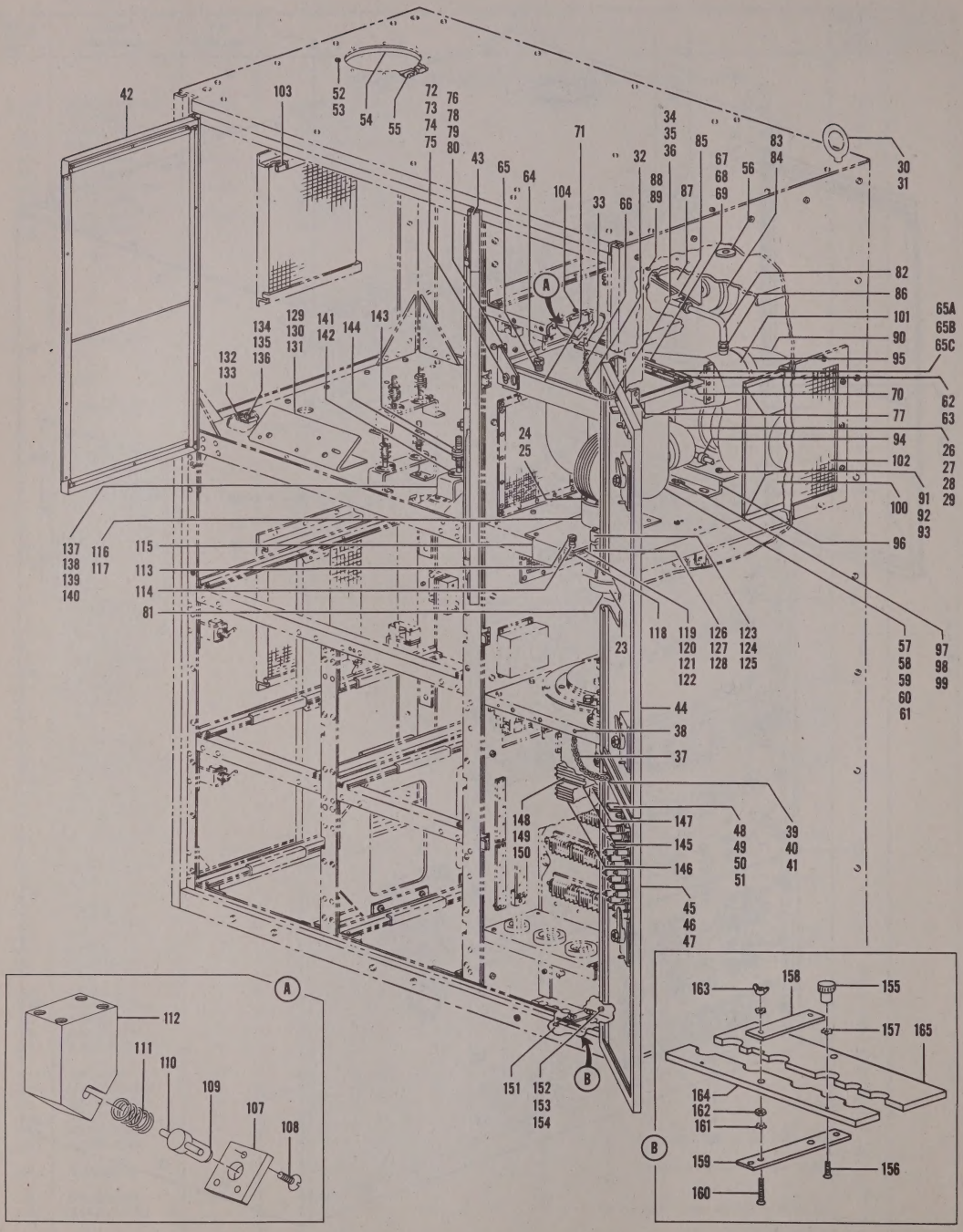

Figure 3. Receiver-Transmitter Group OA–127/CPS–6B, Front View (Sheet 2 of 5 sheets, Index Nos. 23 thru 165)

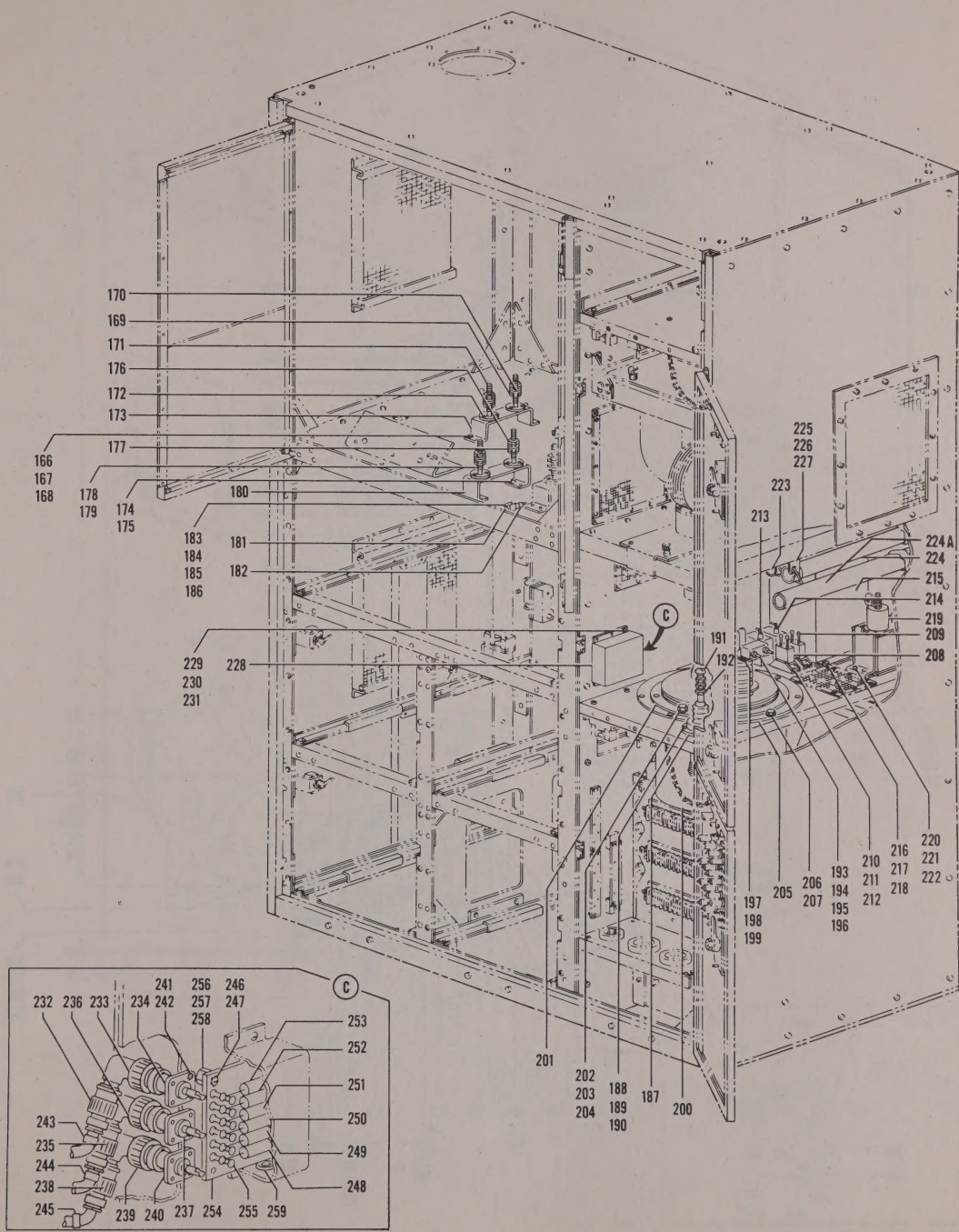

Figure 3. Receiver-Transmitter Group OA–127/CPS–6B, Front View (Sheet 3 of 5 sheets, Index Nos. 166 thru 259)

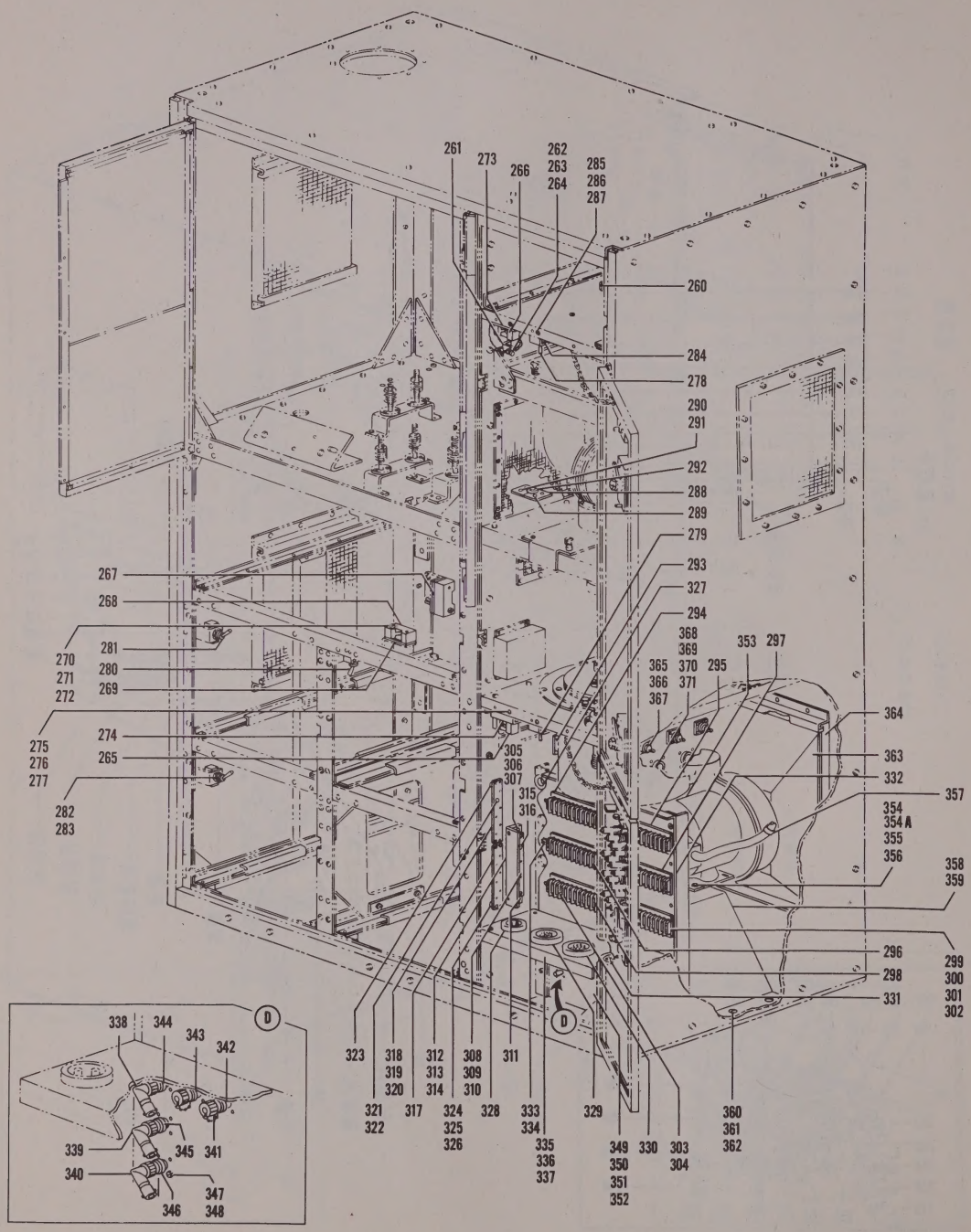

Figure 3. Receiver-Transmitter Group OA–127/CPS–6B, Front View (Sheet 4 of 5 sheets, Index Nos. 260 thru 371)

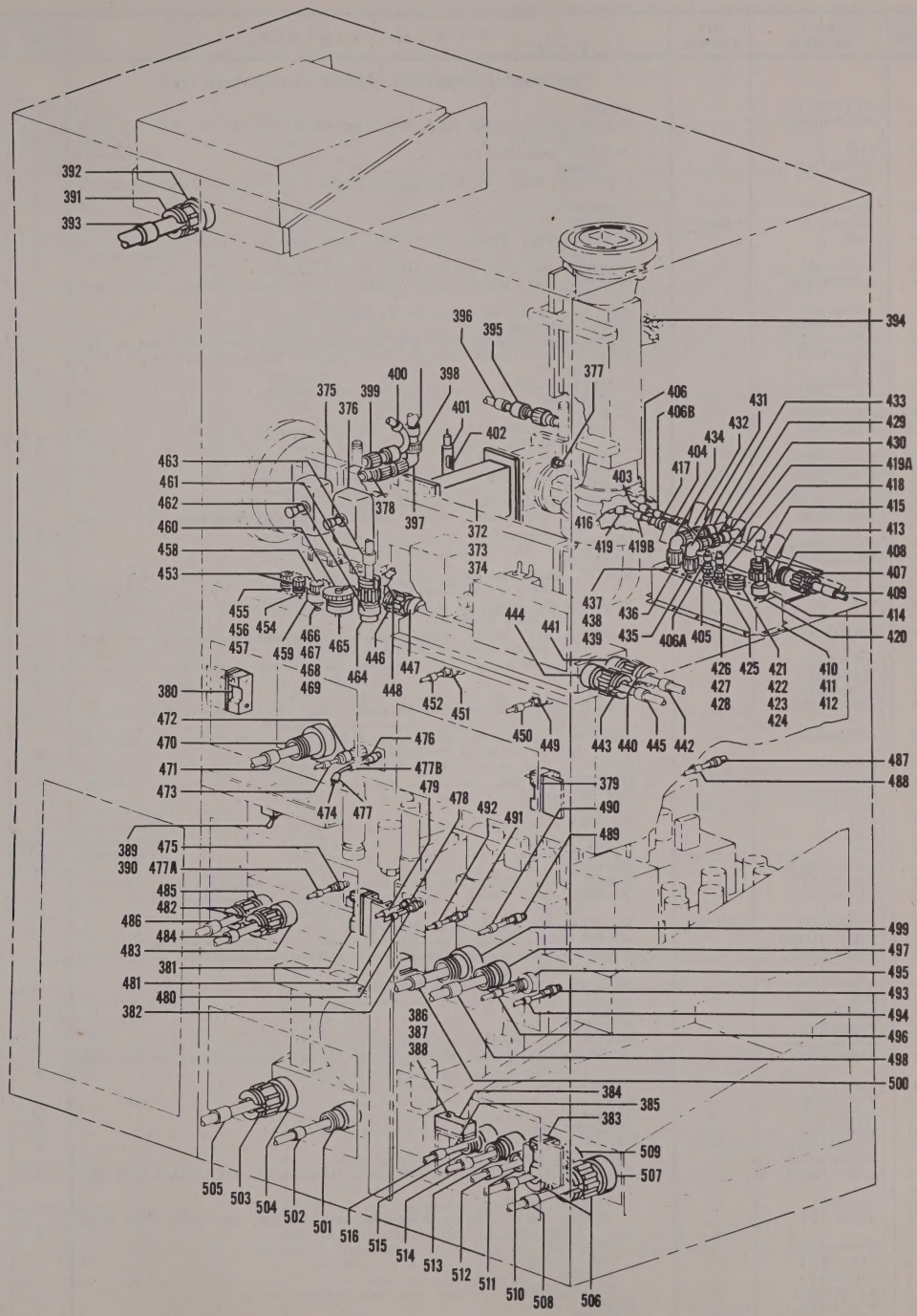

Figure 3. Receiver-Transmitter Group OA–127/CPS–6B, Rear View (Sheet 5 of 5 sheets, Index Nos. 372 thru 516)

FIG. & INDEX NO.	PART NUMBER	REF SYMBOL	NOMENCLATURE 1 2 3 4 5 6 7	UNITS PER ASSY	APPLI-CATION
			RECEIVER-TRANSMITTER GROUP OA–127/CPS–6B (Cont)		
3–	ML7404372G1	—	. CLAMP	1	
–52	AN520B10R8	—	. SCREW, mach: Phillips drive; RH; brass, black oxidized; No. 10–32; 1/2 in lg (Att. Pt.)	8	
–53	1910	—	. WASHER, lock (Att. Pt.) (Shakeproof)	8	
–54	M7404372P2	—	. . CLAMP	1	
–55	Coml	—	. . SCREW, mach: Bristo four-spline drive; socket head; SS; 1/4 in–20; 1 in lg (Bristolco)	1	
–56	M2R53P5	—	. GROMMET	1	
–57	M7482642P1	E2701	. MAGNET	1	
–58	Coml	—	. SCREW, mach: Phillips drive; RH; brass, cad pl; 1/4 in–20; 1-7/8 in lg (Att. Pt.) (Amer Screw)	4	
–59	AN960–416	—	. WASHER, flat: steel, cad pl; round, 1/4 in (Att. Pt.)	4	
–60	AN936B416B	—	. WASHER, lock: bronze, tinned; round, 1/4 in; shakeproof-type, tw ext teeth (Att. Pt.)	4	
–61	AN340–416	—	. NUT, hex: steel, cad pl; 1/4 in–20 (Att. Pt.)	4	
	ML7772595G1	—	. SHELF, mounting	1	
–62	AN520–10R7	—	. SCREW, mach: Phillips drive; RH; steel, cad pl; No. 10–32; 7/16 in lg (Att. Pt.)	5	
–63	AN936B10B	—	. WASHER, lock: bronze, tinned; round, No. 10; shakeproof-type, tw ext teeth (Att. Pt.)	5	
–64	K7126123P4	—	. . SCREW, captive	2	
–65	K7128235P2	—	. . BUSHING	2	
–65A	M7403515P1	—	. . HINGE	1	
–65B	AN510–10R7	—	. . SCREW, mach: Phillips drive; FH; steel, cad pl; No. 10–32; 7/16 in lg (Att. Pt.)	5	
–65C	K7861714P15	—	. . NUT, lock (Att. Pt.)	5	
–66	P7772595P2	—	. . SHELF, mounting	1	
–67	K7001209P1	—	. BRACKET	1	
–68	AN520–10R7	—	. SCREW, mach: Phillips drive; RH; steel, cad pl; No. 10–32; 7/16 in lg (Att. Pt.)	3	
–69	AN936B10B	—	. WASHER, lock: bronze, tinned; round, No. 10; shakeproof-type, tw ext teeth (Att. Pt.)	3	
–70	ML7403599G1	—	. BRACKET	1	
–71	ML7001565G1	—	. BRACKET	1	
–72	Coml	—	. SCREW, mach: slot drive; hex head; brass, cad pl; 1/4 in–20; 3/4 in lg (Att. Pt. for items 70 and 71) (Amer Screw)	8	
–73	Coml	—	. WASHER, flat: steel, cad pl; round, 5/16 in ID, 3/4 in OD, 0.063 in thk (Att. Pt. for items 70 and 71) (Wrought Washer)	8	
–74	AN936B416B	—	. WASHER, lock: bronze, tinned; round, 1/4 in; shakeproof-type, tw ext teeth (Att. Pt. for items 70 and 71)	8	
–75	AN340–416	—	. NUT, hex: steel, cad pl; 1/4 in–20 (Att. Pt. for items 70 and 71)	8	
–76	K7000552P1	—	. GUSSET	2	
–77	K7000552P2	—	. GUSSET	2	
–78	AN520–10R8	—	. SCREW, mach: Phillips drive; RH; steel, cad pl; No. 10–32; 1/2 in lg (Att. Pt. for items 76 and 77)	12	
–79	AN936B10B	—	. WASHER, lock: bronze, tinned; round, No. 10; shakeproof-type, tw ext teeth (Att. Pt. for items 76 and 77)	12	
–80	AN345–10	—	. NUT, hex: steel, cad pl; No. 10–32 (Att. Pt. for items 76 and 77)	12	
–81	K37212	P2705	. CONNECTOR, plug (Millen)	1	
–82	K7003097P1	—	. TUBING	1	
–83	101P2GE	S2719	. SWITCH, pressure (Coral Design)	1	
–84	1824	—	. WASHER, lock (Att. Pt.) (Shakeproof)	1	
–85	62F	—	. FITTING, pipe (Imperbrass)	1	
–86	68F	—	. FITTING, pipe (Imperbrass)	1	
–87	ML7404390G1	—	. BRACKET	1	
–88	AN520–10R8	—	. SCREW, mach: Phillips drive; RH; steel, cad pl; No. 10–32; 1/2 in lg (Att. Pt.)	4	
–89	AN936B10B	—	. WASHER, lock: bronze, tinned; round, No. 10; shakeproof-type, tw ext teeth (Att. Pt.)	4	
–90	P7700709P1	B2701	. BLOWER (See Figure 53 for breakdown)	1	
–91	AN515–416R10	—	. SCREW, mach: Phillips drive; RH; steel, cad pl; 1/4 in–20; 5/8 in lg (Att. Pt.)	4	
–92	AN936B416B	—	. WASHER, lock: bronze, tinned; round, 1/4 in; shakeproof-type, tw ext teeth (Att. Pt.)	4	
–93	AN340–416	—	. NUT, hex: steel, cad pl; 1/4 in–20 (Att. Pt.)	4	
–94	3302	—	. CLAMP (Thomas & Betts)	1	
–95	K7004265P1	—	. CLAMP	1	
–96	P7700660P1	—	. BRACKET	1	
–97	AN515–416R8	—	. SCREW, mach: Phillips drive; RH; steel, cad pl; 1/4 in–20; 1/2 in lg (Att. Pt.)	6	
–98	AN936B416B	—	. WASHER, lock: bronze, tinned; round, 1/4 in; shakeproof-type, tw ext teeth (Att. Pt.)	6	
–99	AN340–416	—	. NUT, hex: steel, cad pl; 1/4 in–20 (Att. Pt.)	6	
–100	ML7600463G1	—	. DUCT	1	
–101	ML7665366G1	—	. DUCT	1	
–102	M7403529P1	—	. CLEANER, air	3	
–103	W7353300P44	—	. GASKET	4	
	ML7000635G1	—	. FASTENER, latch	1	
–104	AN510–416R8	—	. SCREW, mach: Phillips drive; FH; steel, cad pl; 1/4 in–20; 1/2 in lg (Att. Pt.)	4	
✦					
–107	7000634P1	—	. . PLATE, retainer	1	
–108	AN505–6R7	—	. . SCREW, mach: Phillips drive; FH; steel, cad pl; No. 6–32; 7/16 in lg (Att. Pt.)	3	
–109	K7000511P1	—	. . PLUNGER	1	
–110	K7000550P1	—	. . PIN, locking	1	
–111	K7000633P1	—	. . SPRING	1	
–112	K7000632P1	—	. . BLOCK, latch	1	
–113	K7126123P4	—	. SCREW, captive	4	
–114	K7128235P2	—	. BUSHING	4	

FIG. & INDEX NO.	PART NUMBER	REF SYMBOL	NOMENCLATURE 1 2 3 4 5 6 7	UNITS PER ASSY	APPLI-CATION
			RECEIVER-TRANSMITTER GROUP OA-127/CPS-6B (Cont)		
3-115	M7483055P1	—	. PLATE, mounting	1	
-116	M7483054P1	—	. MOUNTING, tube	1	
-117	AN505-416R10	—	. SCREW, mach: Phillips drive; FH; steel, cad pl; 1/4 in-20; 5/8 in lg (Att. Pt.)	4	
-118	M7404497P1	—	. PLATE, reinforcing	2	
-119	K7004244P1	—	. COLLAR, spacing	4	
-120	AN505-4R10	—	. SCREW, mach: Phillips drive; FH; steel, cad pl; No. 4-40; 5/8 in lg (Att. Pt. for items 118 and 119)	4	
-121	AN936B4B	—	. WASHER, lock: bronze, tinned; round, No. 4; shakeproof-type, tw ext teeth (Att. Pt. for items 118 and 119)	4	
-122	AN340-4	—	. NUT, hex: steel, cad pl; No. 4-40 (Att. Pt. for items 118 and 119)	4	
-123	K7005651P2	—	. BLOCK, pressure	1	
-124	Coml	—	. BOLT, mach: hex head; steel, cad pl; 1/4 in-20; 1-1/4 in lg (Att. Pt.) (Amer Screw)	2	
-125	AN936B416B	—	. WASHER, lock: bronze, tinned; round, 1/4 in; shakeproof-type, tw ext teeth (Att. Pt.)	2	
-126	K7005651P1	—	. BLOCK, pressure	1	
-127	AN515-416R8	—	. SCREW, mach: Phillips drive; RH; steel, cad pl; 1/4 in-20; 1/2 in lg (Att. Pt.)	2	
-128	AN936B416B	—	. WASHER, lock: bronze, tinned; round, 1/4 in; shakeproof-type, tw ext teeth (Att. Pt.)	2	
-129	P7703144P1	—	. BRACKET	1	
-130	AN520-10R8	—	. SCREW, mach: Phillips drive; RH; steel, cad pl; No. 10-32; 1/2 in lg (Att. Pt.)	4	
-131	AN936B10B	—	. WASHER, lock: bronze, tinned; round, No. 10; shakeproof-type, tw ext teeth (Att. Pt.)	4	
-132	K7005787P1	—	. GUIDE, drawer	2	
-133	AN510-10-5	—	. SCREW, mach: slot drive; FH; steel, cad pl; No. 10-32; 5/16 in lg (Att. Pt.)	6	
-134	M7480544P20F	—	. COLLAR, spacing	6	
-135	AN520-10-5	—	. SCREW, mach: slot drive; RH; steel, cad pl; No. 10-32; 5/16 in lg (Att. Pt.)	6	
-136	AN936B10B	—	. WASHER, lock: bronze, tinned; round, No. 10; shakeproof-type, tw ext teeth (Att. Pt.)	6	
-137	K7004391P1	—	. BRACKET	1	
-138	AN520-10R8	—	. SCREW, mach: Phillips drive; RH; steel, cad pl; No. 10-32; 1/2 in lg (Att. Pt.)	4	
-139	AN936B10B	—	. WASHER, lock: bronze, tinned; round, No. 10; shakeproof-type, tw ext teeth (Att. Pt.)	4	
-140	AN340-10	—	. NUT, hex: steel, cad pl; No. 10-32 (Att. Pt.)	4	
-141	ML7001501G1	—	. STUD SUBASSEMBLY	1	
-142	AN510-10-8	—	. SCREW, mach: slot drive; FH; steel, cad pl; No. 10-32; 1/2 in lg (Att. Pt.)	3	
-143	AN340-616	—	. NUT, hex: steel, cad pl; 3/8 in-16	4	
-144	AN960-616	—	. WASHER, flat: steel, cad pl; 3/8 in	2	
-145	CP70B1FF805K	C2705	. CAPACITOR, fixed	1	
-146	CP70B1FF805K	C2707	. CAPACITOR, fixed	1	
-147	CP70B1FF805K	C2706	. CAPACITOR, fixed	1	
-148	CP07SC2	—	. CLAMP (Att. Pt. for items 145, 146 and 147)	6	
-149	AN345-10	—	. NUT, hex: steel, cad pl; No. 10-32 (Att. Pt. for items 145, 146 and 147)	12	
-150	AN936B10B	—	. WASHER, lock: bronze, tinned; round, No. 10; shakeproof-type, tw ext teeth (Att. Pt. for items 145, 146 and 147)	12	
	ML7404965G1	—	. COVER SUBASSEMBLY	1	
-151	AN505-10-10	—	. SCREW, mach: slot drive; FH; steel, cad pl; No. 10-32; 5/8 in lg (Att. Pt.)	1	
-152	AN505-10-8	—	. SCREW, mach: slot drive; FH; steel, cad pl; No. 10-32; 1/2 in lg (Att. Pt.)	1	
-153	AN936B10B	—	. WASHER, lock: bronze, tinned; round, No. 10; shakeproof-type, tw ext teeth (Att. Pt.)	2	
-154	AN345-10	—	. NUT, hex: steel, cad pl; No. 10-32 (Att. Pt.)	2	
-155	K7128212P1	—	. . KNOB	2	
-156	AN505-8R7	—	. . SCREW, mach: slot drive; FH; steel, cad pl; No. 8-32; 7/16 in lg (Att. Pt.)	2	
-157	AN936B8B	—	. . WASHER, lock: bronze, tinned; round, No. 8; shakeproof-type, tw ext teeth (Att. Pt.)	2	
-158	K7004687P1	—	. . BRACKET	1	
-159	K7004686P1	—	. . BRACKET	1	
-160	AN510-10R7	—	. . SCREW, mach: slot drive; FH; steel, cad pl; No. 10-32; 7/16 in lg (Att. Pt. for items 158 and 159)	2	
-161	AN936B10B	—	. . WASHER, lock: bronze, tinned; round, No. 10; shakeproof-type, tw ext teeth (Att. Pt. for items 158 and 159)	4	
-162	AN345-10	—	. . NUT, hex: steel, cad pl; No. 10-32 (Att. Pt. for items 158 and 159)	2	
-163	K7867274P21	—	. . NUT, thumb (Att. Pt. for items 158 and 159)	2	
-164	M7404966P2	—	. . PLATE, cover	1	
-165	M7404966P1	—	. . PLATE, cover	1	
	ML7403505G1	—	. SUPPORT, wave guide	1	
-166	AN520-10R8	—	. SCREW, mach: Phillips drive; RH; steel, cad pl; No. 10-32; 1/2 in lg (Att. Pt.)	4	
-167	AN936B10B	—	. WASHER, lock: bronze, tinned; round, No. 10; shakeproof-type, tw ext teeth (Att. Pt.)	4	
-168	AN345-10	—	. NUT, hex: steel, cad pl; No. 10-32 (Att. Pt.)	4	
-169	AN340-616	—	. . NUT, hex: steel, cad pl; 3/8 in-16	8	
-170	Coml	—	. . WASHER, flat: steel, cad pl; round, 13/32 in ID, 3/4 in OD, 1/16 in thk (Wrought Washer)	4	
-171	ML7001501G1	—	. . STUD SUBASSEMBLY	2	
-172	AN510-10R8	—	. . SCREW, mach: Phillips drive; FH; steel, cad pl; No. 10-32; 1/2 in lg (Att. Pt.)	6	
-173	ML7001500G1	—	. . SUPPORT, wave guide	1	
	ML7403505G2	—	. SUPPORT, wave guide	1	
-174	AN520-10R7	—	. SCREW, mach: Phillips drive; RH; steel, cad pl; No. 10-32; 7/16 in lg (Att. Pt.)	4	
-175	AN936B10B	—	. WASHER, lock: bronze, tinned; round, No. 10; shakeproof-type, tw ext teeth (Att. Pt.)	4	
-176	AN340-616	—	. . NUT, hex: steel, cad pl; 3/8 in-16	8	
-177	Coml	—	. . WASHER, flat: steel, cad pl; round, 13/32 in ID, 3/4 in OD, 1/16 in thk (Wrought Washer)	4	

FIG. & INDEX NO.	PART NUMBER	REF SYMBOL	NOMENCLATURE 1 2 3 4 5 6 7	UNITS PER ASSY	APPLI-CATION
			RECEIVER-TRANSMITTER GROUP OA–127/CPS–6B (Cont)		
3–178	ML7001501G1	—	. . STUD SUBASSEMBLY	2	
–179	AN510–10R8	—	. . SCREW, mach: Phillips drive; FH; steel, cad pl; No. 10–32; 1/2 in lg (Att. Pt.)	6	
–180	ML7403861G1	—	. . SUPPORT, wave guide	1	
–181	1N21B	CR2701	. CRYSTAL BLANK, quartz	1	
–182	K7003033P1	—	. HOLDER, crystal	1	
–183	TH15	—	. CLIP (Mallory)	1	
–184	AN515–4R6	—	. SCREW, mach: Phillips drive; RH; steel, cad pl; No. 4–40; 3/8 in lg (Att. Pt.)	2	
–185	AN936B4B	—	. WASHER, lock: bronze, tinned; round, No. 4; shakeproof-type, tw ext teeth (Att. Pt.)	2	
–186	AN340–4	—	. NUT, hex: steel, cad pl; No. 4–40 (Att. Pt.)	2	
–187	UG87A/U	J2701	. CONNECTOR, receptacle	1	
–188	AN520–10R8	—	. SCREW, mach: Phillips drive; RH; steel, cad pl; No. 10–32; 1/2 in lg (Att. Pt.)	6	
–189	AN936B10B	—	. WASHER, lock: bronze, tinned; round, No. 10; shakeproof-type, tw ext teeth (Att. Pt.)	6	
–190	AN345–10	—	. NUT, hex: steel, cad pl; No. 10–32 (Att. Pt.)	6	
–191	AN515–5–12	—	. SCREW, mach: slot drive; RH; steel, cad pl; No. 5–40; 3/4 in lg	1	
–192	AN340–5	—	. NUT, hex: steel, cad pl; No. 5–40	3	
–193	CP53B1FF504K	C2702	. CAPACITOR, fixed	1	
–194	AN515–8R6	—	. SCREW, mach: Phillips drive; RH; steel, cad pl; No. 8–32; 3/8 in lg (Att. Pt.)	2	
–195	AN936B8B	—	. WASHER, lock: bronze, tinned; round, No. 8; shakeproof-type, tw ext teeth (Att. Pt.)	2	
–196	AN340–8	—	. NUT, hex: steel, cad pl; No. 8–32 (Att. Pt.)	2	
–197	K7003617P1	—	. PLATE, mounting	1	
–198	K7893938P2	—	. NUT, hex (Att. Pt.)	2	
–199	AN936B10B	—	. WASHER, lock: bronze, tinned; round, No. 10; shakeproof-type, tw ext teeth (Att. Pt.)	2	
–200	K2795	T2701	. TRANSFORMER, pulse (GE)	1	
–201	MTSH29	—	. GASKET (Metal Textile)	1	
–202	Coml	—	. SCREW, mach: hex head; brass, cad pl; 5/16 in–18; 5/8 in lg (Att. Pt. for items 200 and 201) (Amer Screw)	8	
–203	AN936B516B	—	. WASHER, lock: bronze, tinned; round, 5/16 in; shakeproof-type, tw ext teeth (Att. Pt. for items 200 and 201)	8	
–204	AN340–516	—	. NUT, hex: steel, cad pl; 5/16 in–18 (Att. Pt. for items 200 and 201)	8	
–205	P7772570P1	—	. DISK, mounting	1	
–206	Coml	—	. SCREW, mach: hex head; cad pl; 3/8 in–16; 3/4 in lg (Att. Pt.) (Amer Screw)	6	
–207	AN936B616B	—	. WASHER, lock: bronze, tinned; round, 3/8 in; shakeproof-type, tw ext teeth (Att. Pt.)	6	
–208	CP63B1FG504K	C2703	. CAPACITOR, fixed	1	
–209	CP63B1FG504K	C2704	. CAPACITOR, fixed	1	
–210	AN515–6–7	—	. SCREW, mach: slot drive; RH; steel, cad pl; No. 6–32; 7/16 in lg (Att. Pt. for items 208 and 209)	4	
–211	AN936B6B	—	. WASHER, lock: bronze, tinned; round, No. 6; shakeproof-type, tw ext teeth (Att. Pt. for items 208 and 209)	4	
–212	AN340–6	—	. NUT, hex: steel, cad pl; No. 6–32 (Att. Pt. for items 208 and 209)	4	
–213	JX65A	Z2701	. SUPPRESSOR, electrical noise (Sprague)	1	
–214	JX65A	Z2702	. SUPPRESSOR, electrical noise (Sprague)	1	
–215	7482706	T2702	. TRANSFORMER, power (GE)	1	
–216	AN515–616–12	—	. SCREW, mach: slot drive; RH; steel, cad pl; 3/8 in–16; 3/4 in lg (Att. Pt.)	4	
–217	AN936B616B	—	. WASHER, lock: bronze, tinned; round, 3/8 in; shakeproof-type, tw ext teeth (Att. Pt.)	4	
–218	AN340–616	—	. NUT, hex: steel, cad pl; 3/8 in–16 (Att. Pt.)	4	
–219	26F700	C2701	. CAPACITOR, fixed (GE)	1	
–220	AN515–416–10	—	. SCREW, mach: slot drive; RH; steel, cad pl; 1/4 in–20; 5/8 in lg (Att. Pt.)	4	
–221	AN936B416B	—	. WASHER, lock: bronze, tinned; round, 1/4 in; shakeproof-type, tw ext teeth (Att. Pt.)	4	
–222	AN340–416	—	. NUT, hex: steel, cad pl; 1/4 in–20 (Att. Pt.)	4	
–223	RW11F101	R2701	. RESISTOR, fixed	1	
–224	RW11F101	R2702	. RESISTOR, fixed	1	
–224A	RW11F102	R2710	. RESISTOR, fixed	1	
–225	ML7770257G1	—	. CLIP SET	3	
–226	AN520–10R7	—	. SCREW, mach: Phillips drive; RH; steel, cad pl; No. 10–32; 7/16 in lg (Att. Pt.)	6	
–227	AN936B10B	—	. WASHER, lock: bronze, tinned; round, No. 10; shakeproof-type, tw ext teeth (Att. Pt.)	6	
–228	ML7483056G1	—	. COVER	1	
–229	AN515–8R6	—	. SCREW, mach: Phillips drive; RH; steel, cad pl; No. 8–32; 3/8 in lg (Att. Pt.)	6	
–230	AN936B8B	—	. WASHER, lock: bronze, tinned; round, No. 8; shakeproof-type, tw ext teeth (Att. Pt.)	6	
–231	AN340–8	—	. NUT, hex: steel, cad pl; No. 8–32 (Att. Pt.)	6	
–232	UG260/U	P2702	. CONNECTOR, plug	1	
–233	UG306/U	E2702	. CONNECTOR, adapter	1	
–234	UG290/U	J2702	. CONNECTOR, receptacle	1	
–235	UG260/U	P2703	. CONNECTOR, plug	1	
–236	UG306/U	E2703	. CONNECTOR, adapter	1	
–237	UG290/U	J2703	. CONNECTOR, receptacle	1	
–238	UG260/U	P2704	. CONNECTOR, plug	1	
–239	UG306/U	E2704	. CONNECTOR, adapter	1	
–240	UG290/U	J2704	. CONNECTOR, receptacle	1	
–241	AN520–3–4	—	. SCREW, mach: slot drive; RH; steel, cad pl; No. 3–56; 1/4 in lg Att. Pt. for items 234, 237 and 240)	12	
–242	1103	—	. WASHER, lock (Att. Pt. for items 234, 237 and 240) (Shakeproof)	12	
–243	NP137410G	—	. MARKER, cable	1	
–244	NP137410H	—	. MARKER, cable	1	

FIG. & INDEX NO.	PART NUMBER	REF SYMBOL	NOMENCLATURE 1 2 3 4 5 6 7	UNITS PER ASSY	APPLI-CATION
			RECEIVER-TRANSMITTER GROUP OA–127/CPS–6B (Cont)		
3–245	NP137410J	—	. MARKER, cable	1	
	ML7000669G1	—	. RESISTOR ASSEMBLY, fixed	1	
–246	AN515–8R4	—	. SCREW, mach: Phillips drive; RH; steel, cad pl; No. 8–32; 1/4 in lg (Att. Pt.)	4	
–247	AN936B8B	—	. WASHER, lock: bronze, tinned; round, No. 8; shakeproof-type, tw ext teeth (Att. Pt.)	4	
–248	RC30BF151J	R2703	. . RESISTOR, fixed	1	
–249	RC30BF101J	R2704	. . RESISTOR, fixed	1	
–250	RC30BF680J	R2705	. . RESISTOR, fixed	1	
–251	RC30BF151J	R2706	. . RESISTOR, fixed	1	
–252	RC30BF101J	R2707	. . RESISTOR, fixed	1	
–253	RC30BF680J	R2708	. . RESISTOR, fixed	1	
	ML7000670G1	—	. . BOARD, terminal	1	
–254	K7000670P2	—	. . . PANEL	1	
–255	T100–3	—	. . . TERMINAL, stud (Bead Chain)	12	
–256	M7480544P17B	—	. POST, spacing	4	
–257	AN515–8R4	—	. SCREW, mach: Phillips drive; RH; steel, cad pl; No. 8–32; 1/4 in lg (Att. Pt.)	4	
–258	AN936B8B	—	. WASHER, lock: bronze, tinned; round, No. 8; shakeproof-type, tw ext teeth (Att. Pt.)	4	
–259	M2R53P4	—	. GROMMET	1	
–260	M7403966P1	—	. SHAFT ASSEMBLY	1	
–261	ML7000661G1	—	. BRACKET	2	
–262	AN520–10R8	—	. SCREW, mach: Phillips drive; RH; steel, cad pl; No. 10–32; 1/2 in lg (Att. Pt.)	4	
–263	AN936B10B	—	. WASHER, lock: bronze, tinned; round, No. 10; shakeproof-type, tw ext teeth (Att. Pt.)	4	
–264	AN345–10	—	. NUT, hex: steel, cad pl; No. 10–32 (Att. Pt.)	4	
–265	ML7460330G2	S2711A	. SWITCH, interlock	1	
–266	ML7460330G2	S2701A	. SWITCH, interlock	1	
–267	ML7460330G2	S2716A	. SWITCH, interlock	1	
–268	ML7460330G2	S2707A	. SWITCH, interlock	1	
–269	K7861392P1	—	. INSULATOR, plate	4	
–270	AN515–6R18	—	. SCREW, mach: Phillips drive; RH; steel, cad pl; No. 6–32; 1-1/8 in lg (Att. Pt. for items 265 thru 269)	8	
–271	AN936B6B	—	. WASHER, lock: bronze, tinned; round, No. 6; shakeproof-type, tw ext teeth (Att. Pt. for items 265 thru 269)	8	
–272	AN340–6	—	. NUT, hex: steel, cad pl; No. 6–32 (Att. Pt. for items 265 thru 269)	8	
–273	K7003398P1	—	. PLATE, angle	1	
–274	K7003398P2	—	. PLATE, angle	1	
–275	AN515–6R7	—	. SCREW, mach: Phillips drive; RH; steel, cad pl; No. 6–32; 7/16 in lg (Att. Pt. for items 273 and 274)	4	
–276	AN936B6B	—	. WASHER, lock: bronze, tinned; round, No. 6; shakeproof-type, tw ext teeth (Att. Pt. for items 273 and 274)	4	
–277	AN340–6	—	. NUT, hex: steel, cad pl; No. 6–32 (Att. Pt. for items 273 and 274)	4	
–278	ST22N	S2702	. SWITCH, toggle	1	
–279	ST22N	S2712	. SWITCH, toggle	1	
–280	ST22N	S2706	. SWITCH, toggle	1	
–281	ST22N	S2708	. SWITCH, toggle	1	
–282	ST22N	S2710	. SWITCH, toggle	1	
–283	1222–1	—	. WASHER, lock (Att. Pt. for items 278 thru 282) (Shakeproof)	5	
–284	K7002858P1	—	. BRACKET	2	
–285	AN510–10R6	—	. SCREW, mach: Phillips drive; FH; steel, cad pl; No. 10–32; 3/8 in lg (Att. Pt.)	4	
–286	AN936B10B	—	. WASHER, lock: bronze, tinned; round, No. 10; shakeproof-type, tw ext teeth (Att. Pt.)	4	
–287	K7893938P2	—	. NUT, hex (Att. Pt.)	4	
–288	K7004390P1	—	. PLATE, mounting	2	
–289	AN515–6R7	—	. SCREW, mach: Phillips drive; RH; steel, cad pl; No. 6–32; 7/16 in lg (Att. Pt.)	2	
–290	AN515–6R4	—	. SCREW, mach: Phillips drive; RH; steel, cad pl; No. 6–32; 1/4 in lg (Att. Pt.)	2	
–291	AN936B6B	—	. WASHER, lock: bronze, tinned; round, No. 6; shakeproof-type, tw ext teeth (Att. Pt.)	4	
–292	M2R53P5	—	. GROMMET	1	
–293	MSX8–141	TB2709	. BOARD, terminal (Jones HB)	1	
–294	MSX12–141	TB2701	. BOARD, terminal (Jones HB)	1	
–295	MSX12–141	TB2702	. BOARD, terminal (Jones HB)	1	
–296	MSX12–141	TB2703	. BOARD, terminal (Jones HB)	1	
–297	MSX12–141	TB2704	. BOARD, terminal (Jones HB)	1	
–298	MSX12–141	TB2705	. BOARD, terminal (Jones HB)	1	
–299	MSX12–141	TB2706	. BOARD, terminal (Jones HB)	1	
–300	AN515–6R12	—	. SCREW, mach: Phillips drive; RH; steel, cad pl; No. 6–32; 3/4 in lg (Att. Pt. for items 293 thru 299)	28	
–301	AN936B6B	—	. WASHER, lock: bronze, tinned; round, No. 6; shakeproof-type, tw ext teeth (Att. Pt. for items 293 thru 299)	28	
–302	AN340–6	—	. NUT, hex: steel, cad pl; No. 6–32 (Att. Pt. for items 293 thru 299)	28	
–303	AN515–6R4	—	. SCREW, mach: Phillips drive; RH; steel, cad pl; No. 6–32; 1/4 in lg	160	
–304	AN936B6B	—	. WASHER, lock: bronze, tinned; round, No. 6; shakeproof-type, tw ext teeth	160	
	ML7001547G1	TB2707	. BOARD, terminal	1	
–305	AN515–8–12	—	. SCREW, mach: slot drive; RH; steel, cad pl; No. 8–32; 3/4 in lg (Att. Pt.)	2	
–306	AN936B8B	—	. WASHER, lock: bronze, tinned; round, No. 8; shakeproof-type, tw ext teeth (Att. Pt.)	2	
–307	AN340–8	—	. NUT, hex: steel, cad pl; No. 8–32 (Att. Pt.)	2	
–308	K7001545P1	—	. . BAR, bus	1	
–309	AN515–6–6	—	. . SCREW, mach: slot drive; RH; steel, cad pl; No. 6–32; 3/8 in lg (Att. Pt.)	4	
–310	AN936B6B	—	. . WASHER, lock: bronze, tinned; round, No. 6; shakeproof-type, tw ext teeth (Att. Pt.)	4	
–311	K7001546P1	—	. . BLOCK, spacing	2	

FIG. & INDEX NO.	PART NUMBER	REF SYMBOL	NOMENCLATURE 1 2 3 4 5 6 7	UNITS PER ASSY	APPLI-CATION
			RECEIVER-TRANSMITTER GROUP OA–127/CPS–6B (Cont)		
3–312	K7005041P1	—	. . PLATE, insulating	1	
–313	AN515–6–6	—	. . SCREW, mach: slot drive; RH; steel, cad pl; No. 6–32; 3/8 in lg (Att. Pt.)	2	
–314	AN936B6B	—	. . WASHER, lock: bronze, tinned; round, No. 6; shakeproof-type, tw ext teeth (Att. Pt.)	2	
–315	AN520–10R5	—	. SCREW, mach: Phillips drive; RH; steel, cad pl; No. 10–32; 5/16 in lg	12	
–316	AN936A10B	—	. WASHER, lock: bronze, tinned; round, No. 10; shakeproof-type, tw int teeth	12	
–317	K7001545P1	TB2708	. BOARD, terminal	1	
–318	K7001545P1	TB2710	. BOARD, terminal	1	
–319	AN515–6R4	—	. SCREW, mach: Phillips drive; RH; steel, cad pl; No. 6–32; 1/4 in lg (Att. Pt. for items 317 and 318)	8	
–320	AN936B6B	—	. WASHER, lock: bronze, tinned; round, No. 6; shakeproof-type, tw ext teeth (Att. Pt. for items 317 and 318)	8	
–321	AN520–10R5	—	. SCREW, mach: Phillips drive; RH; steel, cad pl; No. 10–32; 5/16 in lg	24	
–322	AN936A10B	—	. WASHER, lock: bronze, tinned; round, No. 10; shakeproof-type, tw int teeth	24	
–323	K7007419P1	—	. POST, spacing	2	
–324	M7480544P8B	—	. POST, spacing	4	
–325	AN515–6R4	—	. SCREW, mach: Phillips drive; RH; steel, cad pl; No. 6–32; 1/4 in lg (Att. Pt. for items 323 and 324)	8	
–326	AN936B6B	—	. WASHER, lock: bronze, tinned; round, No. 6; shakeproof-type, tw ext teeth (Att. Pt. for items 323 and 324)	8	
–327	M2R53P25	—	. GROMMET	3	
–328	C1149	J2716	. CONNECTOR, receptacle (Buggie)	1	
–329	C1126	J2717	. CONNECTOR, receptacle (Buggie)	1	
–330	C1128	J2718	. CONNECTOR, receptacle (Buggie)	1	
–331	C1126	J2719	. CONNECTOR, receptacle (Buggie)	1	
–332	T7665291P1	—	. MOUNTING, bracket	1	
–333	AN520–10R7	—	. SCREW, mach: Phillips drive; RH; steel, cad pl; No. 10–32; 7/16 in lg (Att. Pt.)	6	
–334	AN936B10B	—	. WASHER, lock: bronze, tinned; round, No. 10; shakeproof-type, tw ext teeth (Att. Pt.)	6	
–335	P7703082P1	—	. PLATE, mounting	1	
–336	AN520–10R7	—	. SCREW, mach: Phillips drive; RH; steel, cad pl; No. 10–32; 7/16 in lg (Att. Pt.)	5	
–337	AN936B10B	—	. WASHER, lock: bronze, tinned; round, No. 10; shakeproof-type, tw ext teeth (Att. Pt.)	5	
–338	UG306/U	E2720	. CONNECTOR, adapter	1	
–339	UG306/U	E2721	. CONNECTOR, adapter	1	
–340	UG306/U	E2722	. CONNECTOR, adapter	1	
–341	CW–123/U	—	. CAP AND CHAIN SUBASSEMBLY	2	
–342	UG262/U	J2727	. CONNECTOR, receptacle	1	
–343	UG262/U	J2726	. CONNECTOR, receptacle	1	
–344	UG262/U	J2720	. CONNECTOR, receptacle	1	
–345	UG262/U	J2721	. CONNECTOR, receptacle	1	
–346	UG262/U	J2722	. CONNECTOR, receptacle	1	
–347	AN520–3–5	—	. SCREW, mach: slot drive; RH; steel, cad pl; No. 3–56; 5/16 in lg (Att. Pt. for items 341 thru 346)	20	
–348	1103	—	. WASHER, lock (Att. Pt. for items 341 thru 346) (Shakeproof)	20	
–349	ML7772578G1	—	. PLATE SUBASSEMBLY, cover	1	
–350	AN520–10–6	—	. SCREW, mach: slot drive; RH; steel, cad pl; No. 10–32; 3/8 in lg (Att. Pt.)	14	
–351	AN936B10B	—	. WASHER, lock: bronze, tinned; round, No. 10; shakeproof-type, tw ext teeth (Att. Pt.)	14	
–352	AN345–10	—	. NUT, hex: steel, cad pl; No. 10–32 (Att. Pt.)	8	
–353	P7700708P1	B2702	. BLOWER (See Figure 54 for breakdown)	1	
–354	Coml	—	. SCREW, mach: hex head; brass, cad pl; 5/16 in–18; 3/4 in lg (Att. Pt.) (Amer Screw)	4	
–354A	Coml	—	. WASHER, flat: brass, cad pl; round, 5/16 in ID, 3/4 in OD, 0.063 in thk (Att. Pt.) (Wrought Washer)	8	
–355	AN936B516B	—	. WASHER, lock: bronze, tinned; round, 5/16 in; shakeproof-type, tw ext teeth (Att. Pt.)	4	
–356	AN340–516	—	. NUT, hex: steel, cad pl; 5/16 in–18 (Att. Pt.)	4	
–357	3302	—	. CLAMP (Thomas & Betts)	1	
–358	P7700653P1	—	. MOUNTING, bracket	1	
–359	AN515–416–10	—	. SCREW, mach: slot drive; RH; steel, cad pl; 1/4 in–20; 5/8 in lg (Att. Pt.)	3	
–360	AN505–416R10	—	. SCREW, mach: Phillips drive; FH; steel, cad pl; 1/4 in–20; 5/8 in lg (Att. Pt.)	3	
–361	AN936B416B	—	. WASHER, lock: bronze, tinned; round, 1/4 in; shakeproof-type, tw ext teeth (Att. Pt.)	6	
–362	AN340–416	—	. NUT, hex: steel, cad pl; 1/4 in–20 (Att. Pt.)	6	
–363	ML7772566G1	—	. DUCT	1	
–364	M7403529P2	—	. CLEANER, air	1	
–365	UG290/U	—	. CONNECTOR, receptacle	3	
–366	AN515–3R5	—	. SCREW, mach: Phillips drive; RH; steel, cad pl; No. 3–56; 5/16 in lg (Att. Pt.)	12	
–367	1203	—	. WASHER, lock (Att. Pt.) (Shakeproof)	12	
–368	9718122	—	. CONNECTOR, receptacle (Amphenol)	2	
–369	AN515–4R6	—	. SCREW, mach: Phillips drive; RH; steel, cad pl; No. 4–40; 3/8 in lg (Att. Pt.)	8	
–370	AN936B4B	—	. WASHER, lock: bronze, tinned; round, No. 4; shakeproof-type, tw ext teeth (Att. Pt.)	8	
–371	AN340–4	—	. NUT, hex: steel, cad pl; No. 4–40 (Att. Pt.)	8	
–372	368	V2502	. TUBE, electron (Sylvania Prod)	1	
–373	AN520–10R6	—	. SCREW, mach: Phillips drive; RH; steel, cad pl; No. 10–32; 3/8 in lg (Att. Pt.)	4	
–374	AN935–10	—	. WASHER, lock: steel, cad pl; No. 10 (Att. Pt.)	4	
–375	346	V2509	. TUBE, electron (Sylvania Prod)	1	
–376	346	V2510	. TUBE, electron (Sylvania Prod)	1	
–377	1N21C	CR2501	. CRYSTAL BLANK, quartz	1	
–378	1N21B	CR2502	. CRYSTAL BLANK, quartz	1	

FIG. & INDEX NO.	PART NUMBER	REF SYMBOL	NOMENCLATURE 1 2 3 4 5 6 7	UNITS PER ASSY	APPLI-CATION
			RECEIVER-TRANSMITTER GROUP OA–127/CPS–6B (Cont)		
3–379	ML7460330G2	S2713A	. SWITCH, interlock	1	
–380	ML7460330G2	S2714A	. SWITCH, interlock	1	
–381	ML7460330G2	S2715A	. SWITCH, interlock	1	
–382	ML7460330G2	S2705A	. SWITCH, interlock	1	
–383	ML7460330G2	S2717A	. SWITCH, interlock	1	
–384	ML7460330G2	S2709A	. SWITCH, interlock	1	
–385	K7861392P1	—	. INSULATOR, plate	6	
–386	AN515–6R20	—	. SCREW, mach: Phillips drive; RH; steel, cad pl; No. 6–32; 1-1/4 in lg (Att. Pt. for items 379 thru 385)	12	
–387	AN936B6B	—	. WASHER, lock: bronze, tinned; round, No. 6; shakeproof-type, tw ext teeth (Att. Pt. for items 379 thru 385)	12	
–388	AN340–6	—	. NUT, hex: steel, cad pl; No. 6–32 (Att. Pt. for items 379 thru 385)	12	
–389	ST22N	S2718	. SWITCH, toggle	1	
–390	1222–1	—	. WASHER, lock (Att. Pt.) (Shakeproof)	1	
–391	AN3057–16	—	. CLAMP	1	
–392	AN3106–28–2S	P2801	. CONNECTOR, plug	1	
–393	NP137426A	—	. MARKER, cable	1	
–394	MJB1/200	F2701	. FUSE, cartridge (Buss)	1	
–395	UG18/U	P2502	. CONNECTOR, plug	1	
–396	NP140304A	—	. MARKER, cable	1	
–397	UG27A/U	E2503	. CONNECTOR, adapter	1	
–398	UG18/U	P2503	. CONNECTOR, plug	1	
–399	UG18/U	P2504	. CONNECTOR, plug	1	
–400	NP140304B	—	. MARKER, cable	1	
	ML7004274G2	—	. CABLE ASSEMBLY, RF	1	
–401	No Number	P2710	. . CONNECTOR, plug (K7004272P1, K7004273P1, K7876696P35 and K7898703P1, assembled)	1	
–402	P7770419P235	R2709	. . RESISTOR, fixed	1	
	ML7008157G1	W2702	. CABLE ASSEMBLY, RF	1	
–403	RG71/U	—	. . CABLE, RF: 9-1/2 in lg	1	
–404	UG260/U	P102	. . CONNECTOR, plug	1	
–405	UG260/U	P2708	. . CONNECTOR, plug	1	
–406	NP144324R	—	. . MARKER, cable	1	
–406A	NP137410L	—	. . MARKER, cable	1	
–406B	NP137410R	—	. . MARKER, cable	1	
–407	AN3057–6	—	. CLAMP	1	
–408	AN3108–14S5S	P103	. CONNECTOR, plug	1	
–409	NP137426V	—	. MARKER, cable	1	
–410	P7703143P1	—	. COVER	1	
–411	AN520–10R7	—	. SCREW, mach: Phillips drive; RH; steel, cad pl; No. 10–32; 7/16 in lg (Att. Pt.)	14	
–412	AN936B10B	—	. WASHER, lock: bronze, tinned; round, No. 10; shakeproof-type, tw ext teeth (Att. Pt.)	14	
–413	AN3057–6	—	. CLAMP	1	
–414	AN3106–14S5P	P2706	. CONNECTOR, plug	1	
–415	NP137426G	—	. MARKER, cable	1	
	ML7008158 G1	W2701	. CABLE ASSEMBLY, RF	1	
–416	RG59/U	—	. . CABLE, RF: 11-1/2 in lg	1	
–417	UG260/U	P101	. . CONNECTOR, plug	1	
–418	UG260/U	P2707	. . CONNECTOR, plug	1	
–419	NP144324P	—	. . MARKER, cable	1	
–419A	NP137410K	—	. . MARKER, cable	1	
–419B	NP137410P	—	. . MARKER, cable	1	
–420	AN3102–14S5S	J2706	. CONNECTOR, receptacle	1	
–421	AN3102–16–10S	J2728	. CONNECTOR, receptacle	1	
–422	AN515–4R6	—	. SCREW, mach: Phillips drive; RH; steel, cad pl; No. 4–40; 3/8 in lg (Att. Pt. for items 420 and 421)	8	
–423	AN936B4B	—	. WASHER, lock: bronze, tinned; round, No. 4; shakeproof-type, tw ext teeth (Att. Pt. for items 420 and 421)	8	
–424	AN340–4	—	. NUT, hex: steel, cad pl; No. 4–40 (Att. Pt. for items 420 and 421)	8	
–425	UG262/U	J2707	. CONNECTOR, receptacle	1	
–426	UG262/U	J2708	. CONNECTOR, receptacle	1	
–427	AN520–3–4	—	. SCREW, mach: slot drive; RH; steel, cad pl; No. 3–56; 1/4 in lg (Att. Pt. for items 425 and 426)	8	
–428	1103	—	. WASHER, lock (Att. Pt. for items 425 and 426) (Shakeproof)	8	
–429	UG18/U	P2724	. CONNECTOR, plug	1	
–430	NP137417B	—	. MARKER, cable	1	
–431	UG27A/U	E2724	. CONNECTOR, adapter	1	
–432	UG18/U	P2725	. CONNECTOR, plug	1	
–433	NP137417C	—	. MARKER, cable	1	
–434	UG27A/U	E2725	. CONNECTOR, adapter	1	
–435	UG19/U	J2724	. CONNECTOR, receptacle	1	
–436	UG19/U	J2725	. CONNECTOR, receptacle	1	
–437	AN515–4R6	—	. SCREW, mach: Phillips drive; RH; steel, cad pl; No. 4–40; 3/8 in lg (Att. Pt. for items 435 and 436)	8	
–438	AN936B4B	—	. WASHER, lock: bronze, tinned; round, No. 4; shakeproof-type, tw ext teeth (Att. Pt. for items 435 and 436)	8	
–439	AN340–4	—	. NUT, hex: steel, cad pl; No. 4–40 (Att. Pt. for items 435 and 436)	8	
–440	97–3057–10–6	—	. CLAMP (Amphenol)	1	
–441	AN3106–18–16P	P3502	. CONNECTOR, plug	1	
–442	NP137426E	—	. MARKER, cable	1	
–443	AN3057–10	—	. CLAMP	1	
–444	AN3106–18–16P	P3503	. CONNECTOR, plug	1	
–445	NP137426F	—	. MARKER, cable	1	

FIG. & INDEX NO.	PART NUMBER	REF SYMBOL	NOMENCLATURE 1 2 3 4 5 6 7	UNITS PER ASSY	APPLI-CATION
			RECEIVER-TRANSMITTER GROUP OA–127/CPS–6B (Cont)		
3–446	AN3057–8	—	. CLAMP	1	
–447	AN3106–16–10S	P3501	. CONNECTOR, plug	1	
–448	NP137426D	—	. MARKER, cable	1	
–449	UG18/U	P711	. CONNECTOR, plug	1	
–450	NP137427A	—	. MARKER, cable	1	
–451	UG18/U	P715	. CONNECTOR, plug	1	
–452	NP137427B	—	. MARKER, cable	1	
–453	CW–123/U	—	. CAP AND CHAIN SUBASSEMBLY	2	
–454	UG262/U	J2712	. CONNECTOR, receptacle	1	
–455	UG262/U	J2713	. CONNECTOR, receptacle	1	
–456	AN520–3–5	—	. SCREW, mach: slot drive; RH; steel, cad pl; No. 3–56; 5/16 in lg (Att. Pt. for items 453, 454 and 455)	8	
–457	1103	—	. WASHER, lock (Att. Pt. for items 453, 454 and 455) (Shakeproof)	8	
	ML7003043G1	E2714	. CONNECTOR SUBASSEMBLY	1	
–458	9760–12	—	. . CAP AND CHAIN SUBASSEMBLY (Amphenol)	1	
–459	AN3106–14S5P	—	. . CONNECTOR, plug	1	
–460	9760–22	—	. CAP AND CHAIN SUBASSEMBLY (Amphenol)	1	
–461	AN3057–16	—	. CLAMP	1	
–462	AN3106–16–10P	P2709	. CONNECTOR, plug	1	
–463	NP137426H	—	. MARKER, cable	1	
–464	AN3102–16–10S	J2709	. CONNECTOR, receptacle	1	
–465	AN3102–22–33S	J2715	. CONNECTOR, receptacle	1	
–466	AN3102–14S5S	J2714	. CONNECTOR, receptacle	1	
–467	AN515–4R6	—	. SCREW, mach: Phillips drive; RH; steel, cad pl; No. 4–40; 3/8 in lg (Att. Pt. for items 464, 465 and 466)	12	
–468	AN936B4B	—	. WASHER, lock: bronze, tinned; round, No. 4; shakeproof-type, tw ext teeth (Att. Pt. for items 464, 465 and 466)	12	
–469	AN340–4	—	. NUT, hex: steel, cad pl; No. 4–40 (Att. Pt. for items 464, 465 and 466)	12	
–470	AN3108–28–2S	P719	. CONNECTOR, plug	1	
–471	NP137427C	—	. MARKER, cable	1	
–472	UG18/U	P701	. CONNECTOR, plug	1	
–473	NP137417D	—	. MARKER, cable	1	
	ML7008156G1	W2719	. CABLE ASSEMBLY, RF	1	
–474	RG55/U	—	. . CABLE, RF: 20-1/2 in lg	1	
–475	UG88/U	P602	. . CONNECTOR, plug	1	
–476	UG88/U	P702	. . CONNECTOR, plug	1	
–477	NP144324S	—	. . MARKER, cable	1	
–477A	NP137410B1	—	. . MARKER, cable	1	
–477B	NP137410A1	—	. . MARKER, cable	1	
–478	UG260/U	P603	. CONNECTOR, plug	1	
–479	NP137410C1	—	. MARKER, cable	1	
–480	UG260/U	P604	. CONNECTOR, plug	1	
–481	NP137410D1	—	. MARKER, cable	1	
–482	AN3057–12	—	. CLAMP	2	
–483	AN3106–22–33S	P605	. CONNECTOR, plug	1	
–484	NP137427D	—	. MARKER, cable	1	
–485	AN3106–22–33S	P606	. CONNECTOR, plug	1	
–486	NP137427E	—	. MARKER, cable	1	
–487	UG260/U	P2207	. CONNECTOR, plug	1	
–488	NP137410Z	—	. MARKER, cable	1	
–489	UG260/U	P302	. CONNECTOR, plug	1	
–490	NP137410S	—	. MARKER, cable	1	
–491	UG260/U	P305	. CONNECTOR, plug	1	
–492	NP137410V	—	. MARKER, cable	1	
–493	UG260/U	P2204	. CONNECTOR, plug	1	
–494	NP137410W	—	. MARKER, cable	1	
–495	AN3106–14S5P	P2203	. CONNECTOR, plug	1	
–496	NP137426Z	—	. MARKER, cable	1	
–497	AN3106–22–33S	P2201	. CONNECTOR, plug	1	
–498	NP137426X	—	. MARKER, cable	1	
–499	AN3106–28–2S	P2202	. CONNECTOR, plug	1	
–500	NP137426Y	—	. MARKER, cable	1	
–501	AN3106–22–23P	P3001	. CONNECTOR, plug	1	
–502	NP140089A	—	. MARKER, cable	1	
–503	AN3057–16	—	. CLAMP	1	
–504	AN3106–28–2S	P3002	. CONNECTOR, plug	1	
–505	NP137426B	—	. MARKER, cable	1	
–506	AN3057–20	—	. CLAMP	2	
–507	AN3106–32–12S	P3201	. CONNECTOR, plug	1	
–508	NP137426P	—	. MARKER, cable	1	
–509	AN3106–32–12P	P3202	. CONNECTOR, plug	1	
–510	NP137426R	—	. MARKER, cable	1	
–511	AN3106–22–33P	P3203	. CONNECTOR, plug	1	
–512	NP137426S	—	. MARKER, cable	1	
–513	AN3106–22–33P	P3204	. CONNECTOR, plug	1	
–514	NP137426T	—	. MARKER, cable	1	
–515	AN3106–22–33P	P3206	. CONNECTOR, plug	1	
–516	NP137426U	—	. MARKER, cable	1	

FIG. & INDEX NO.	PART NUMBER	REF SYMBOL	NOMENCLATURE 1 2 3 4 5 6 7	UNITS PER ASSY	APPLI-CATION
			RECEIVER-TRANSMITTER GROUP OA–128/CPS–6B		
4–	ML7353300G3	—	RECEIVER-TRANSMITTER GROUP OA–128/CPS–6B	1	
–1	672	—	. SLOTTED LINE IM–23/U (See Figure 7 for breakdown) (Polytechnic Research & Development)	1	
–2	Coml	—	. SCREW, mach: hex head; brass, cad pl; 1/4 in–20; 1-3/4 in lg (Att. Pt.) (Amer Screw)	8	
–3	AN936B416B	—	. WASHER, lock: bronze, tinned; round, 1/4 in; shakeproof-type, tw ext teeth (Att. Pt.)	8	
–4	D1056–135	—	. DUPLEXER CU–192/CPS–6B (See Figure 14 for breakdown) (Terpening)	1	
–5	AN520–10R10	—	. SCREW, mach: Phillips drive; RH; steel, cad pl; No. 10–32; 5/8 in lg (Att. Pt.)	8	
–6	AN936B10B	—	. WASHER, lock: bronze, tinned; round, No. 10; shakeproof-type, tw ext teeth (Att. Pt.)	8	
–7	AN345–10	—	. NUT, hex: steel, cad pl; No. 10–32 (Att. Pt.)	8	
–8	ML7353068G1	—	. BEACON RECEIVER (See Figure 16 for breakdown)	1	
–9	ML7666709G1	—	. IF AMPLIFIER AM–306/CPS–6B (See Figure 21 for breakdown)	1	
–10	ML7352780G1	—	. FREQUENCY CONTROL C–595/CPS–6B (See Figure 22 for breakdown)	1	
–11	ML7664491G1	—	. IF AMPLIFIER AM–304/CPS–6B (See Figure 26 for breakdown)	1	
–12	ML7664492G1	—	. POWER SUPPLY PP–460/CPS–6B (See Figure 27 for breakdown)	1	
–13	AN520–10R7	—	. SCREW, mach: Phillips drive; RH; steel, cad pl; No. 10–32; 7/16 in lg (Att. Pt.)	8	
–14	AN936B10B	—	. WASHER, lock: bronze, tinned; round, No. 10; shakeproof-type, tw ext teeth (Att. Pt.)	8	
–15	AN345–10	—	. NUT, hex: steel, cad pl; No. 10–32 (Att. Pt.)	8	
–16	ML7354003G1	—	. RF OSCILLATOR O–94/CPS–6B (See Figure 28 for breakdown)	1	
–17	ML7352793G1	—	. RECEIVER CONTROL C–596/CPS–6B (See Figure 35 for breakdown)	1	
–18	ML7353055G1	—	. VOLTAGE REGULATOR CN–103/CPS–6B (See Figure 38 for breakdown)	1	
–19	ML7353057G1	—	. POWER SUPPLY PP–459/CPS–6B (See Figure 39 for breakdown)	1	
–20	ML7354006G1	—	. RADAR RECEIVER R–307/CPS–6B (See Figure 40 for breakdown)	1	
–21	ML7353099G1	—	. FRAME (See Figure 55 for breakdown)	1	
–22	NP140326	—	. PLATE, identification	1	
–23	NP140021A	—	. PLATE, identification	1	
–24	Coml	—	. SCREW, self-tapping: Phillips drive; Bind H; SS; No. 4–40; 1/4 in lg (Att. Pt. for items 22 and 23) (Shakeproof)	8	
–25	QK229/RK5657	V2702	. TUBE, electron	1	
–26	AN520–10R8	—	. SCREW, mach: Phillips drive; RH; steel, cad pl; No. 10–32; 1/2 in lg (Att. Pt.)	8	
–27	AN936B10B	—	. WASHER, lock: bronze, tinned; round, No. 10; shakeproof-type, tw ext teeth (Att. Pt.)	8	
–28	T7665292P2	—	. COUPLING UNIT, wave guide	1	
–29	AN515–416R14	—	. SCREW, mach: Phillips drive; RH; steel, cad pl; 1/4 in–20; 7/8 in lg (Att. Pt.)	8	
–30	AN936B416B	—	. WASHER, lock: bronze, tinned; round, 1/4 in; shakeproof-type, tw ext teeth (Att. Pt.)	8	
–31	AN340–416	—	. NUT, hex: steel, cad pl; 1/4 in–20 (Att. Pt.)	8	
–32	Coml	—	. SCREW, eye: steel, cad pl; 1/2 in–13; 7/16 in lg; machine screw thread; straight angle round eye; 7/16 in ID (Amer Screw)	4	
–33	AN335–8	—	. NUT, hex: steel, cad pl; 1/2 in–13 (Att. Pt.)	4	
–34	K7005270P1	—	. CHAIN ASSEMBLY	1	
–35	AN505–8–7	—	. SCREW, mach: slot drive; FH; steel, cad pl; No. 8–32; 7/16 in lg (Att. Pt.)	1	
–36	AN515–8–5	—	. SCREW, mach: slot drive; RH; steel, cad pl; No. 8–32; 5/16 in lg (Att. Pt.)	2	
–37	AN936B8B	—	. WASHER, lock: bronze, tinned; round, No. 8; shakeproof-type, tw ext teeth (Att. Pt.)	3	
–38	AN340–8	—	. NUT, hex: steel, cad pl; No. 8–32 (Att. Pt.)	3	
–39	K7005270P1	—	. CHAIN ASSEMBLY	1	
–40	AN505–8–7	—	. SCREW, mach: slot drive; FH; steel, cad pl; No. 8–32; 7/16 in lg (Att. Pt.)	1	
–41	AN515–8–5	—	. SCREW, mach: slot drive; RH; steel, cad pl; No. 8–32; 5/16 in lg (Att. Pt.)	2	
–42	AN936B8B	—	. WASHER, lock: bronze, tinned; round, No. 8; shakeproof-type, tw ext teeth (Att. Pt.)	3	
–43	AN340–8	—	. NUT, hex: steel, cad pl; No. 8–32 (Att. Pt.)	3	
–44	ML7772591G1	—	. DOOR (See Figure 49 for breakdown)	1	
–45	ML7772590G1	—	. DOOR (See Figure 50 for breakdown)	1	
–46	ML7772598G1	—	. DOOR (See Figure 51 for breakdown)	1	
–47	ML7772592G1	—	. DOOR (See Figure 52 for breakdown)	1	
–48	AN515–8R4	—	. SCREW, mach: Phillips drive; RH; steel, cad pl; No. 8–32; 1/4 in lg (Att. Pt. for items 44 thru 47)	23	
–49	AN936B8B	—	. WASHER, lock: bronze, tinned; round, No. 8; shakeproof-type, tw ext teeth (Att. Pt. for items 44 thru 47)	23	
–50	K7002269P2	—	. BRACKET	2	
–51	AN520B10R7	—	. SCREW, mach: Phillips drive; RH; brass, black oxidized; No. 10–32; 7/16 in lg (Att. Pt.)	4	
–52	1910	—	. WASHER, lock (Att. Pt.) (Shakeproof)	4	
–53	AN345–10	—	. NUT, hex: steel, cad pl; No. 10–32 (Att. Pt.)	4	
	ML7404372G1	—	. CLAMP	1	
–54	AN520B10R8	—	. SCREW, mach: Phillips drive; RH; brass, black oxidized; No. 10–32; 1/2 in lg (Att. Pt.)	8	
–55	1910	—	. WASHER, lock (Att. Pt.) (Shakeproof)	8	
–56	M7404372P2	—	. . CLAMP	1	
–57	Coml	—	. . SCREW, mach: Bristo four-spline drive; socket head; SS; 1/4 in–20; 1 in lg	1	
–58	M2R53P5	—	. GROMMET	1	
–59	M7482642P1	E2701	. MAGNET	1	
–60	Coml	—	. SCREW, mach: Phillips drive; RH; brass, cad pl; 1/4 in–20; 1-7/8 in lg (Att. Pt.) (Amer Screw)	4	
–61	AN960–416	—	. WASHER, flat: steel, cad pl; round, 1/4 in (Att. Pt.)	4	
–62	AN936B416B	—	. WASHER, lock: bronze, tinned; round, 1/4 in; shakeproof-type, tw ext teeth (Att. Pt.)	4	
–63	AN340–416	—	. NUT, hex: steel, cad pl; 1/4 in–20 (Att. Pt.)	4	
	ML7772595G1	—	. SHELF, mounting	1	

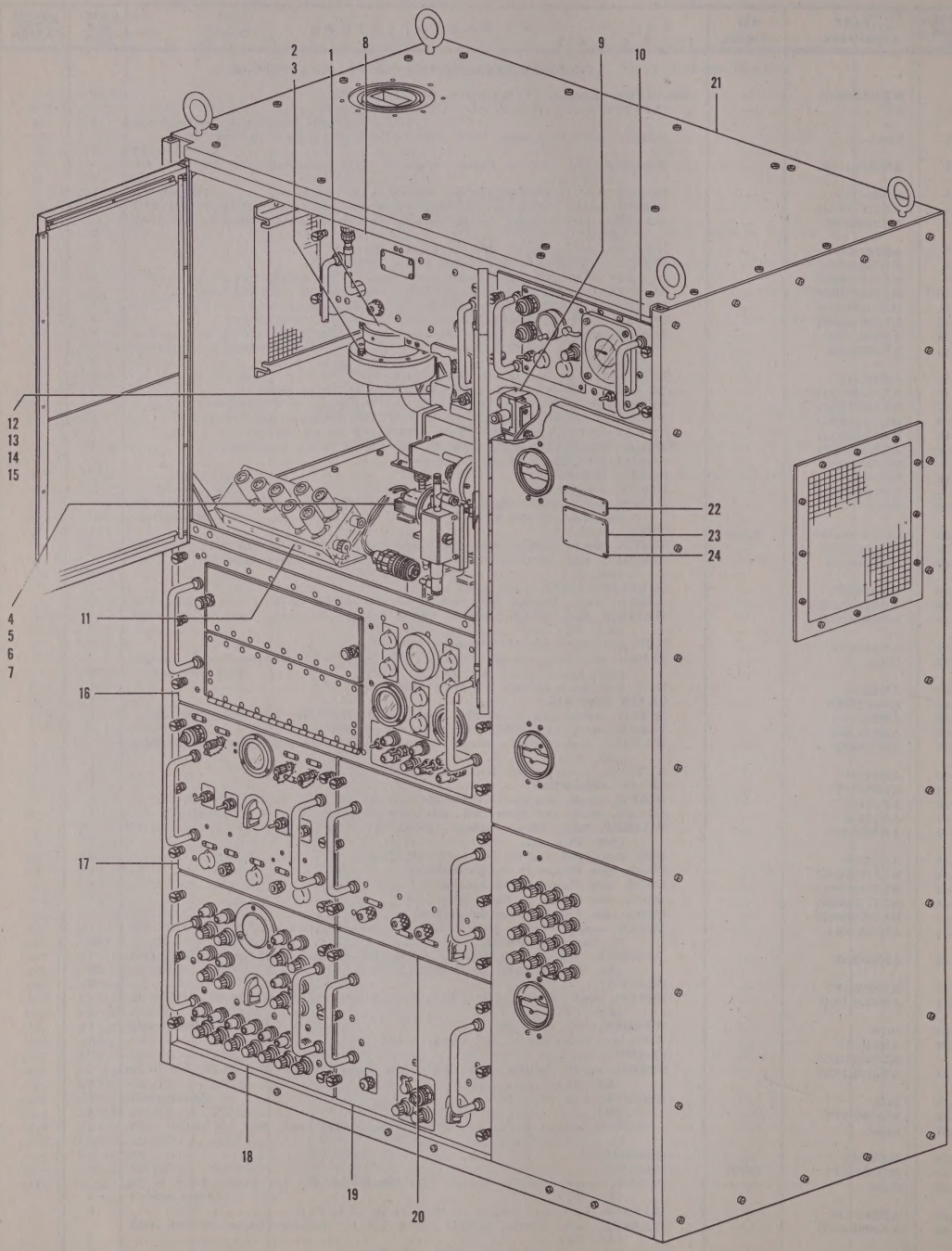

Figure 4. Receiver-Transmitter Group OA–128/CPS–6B, Front View (Sheet 1 of 5 sheets, Index Nos. 1 thru 24)

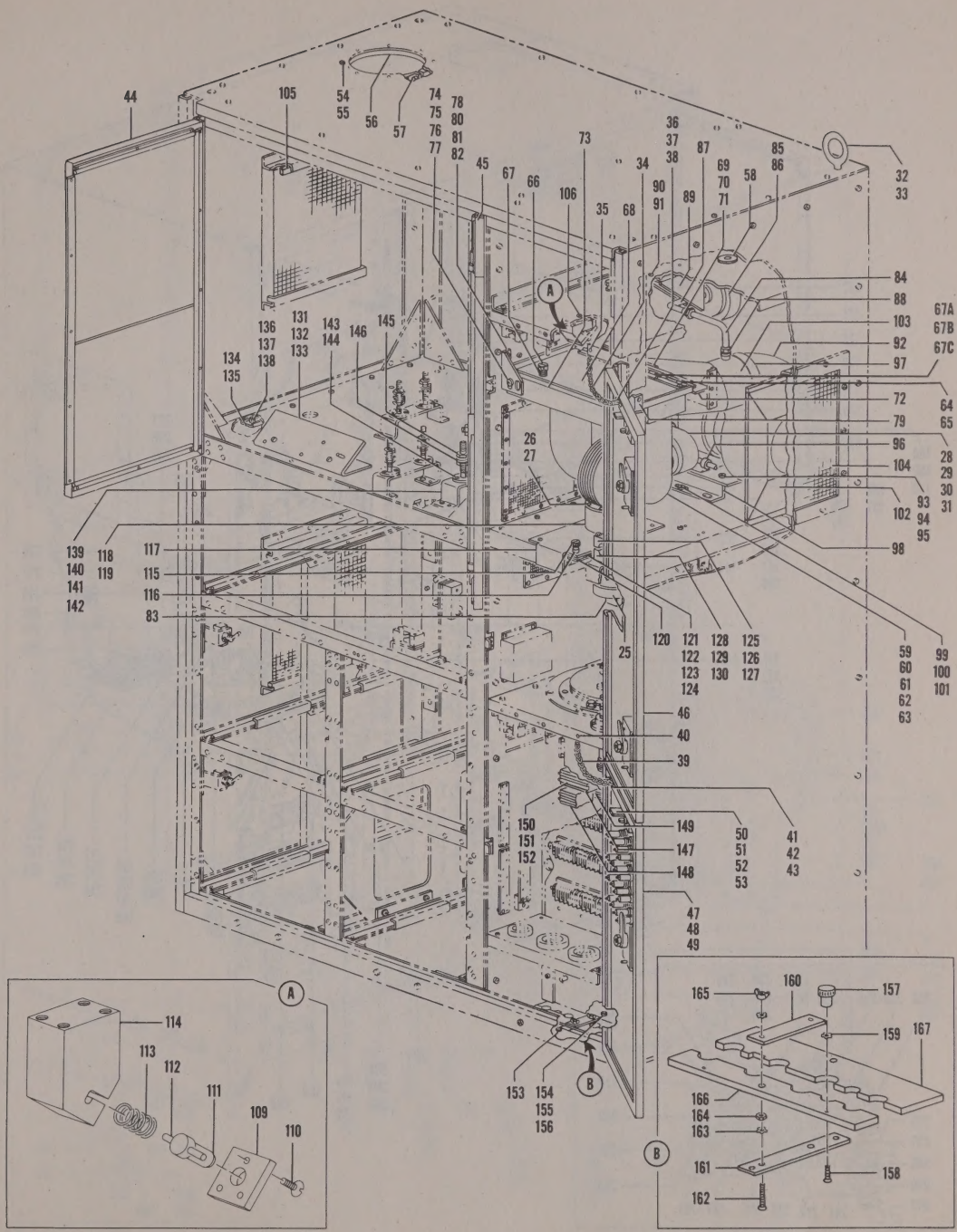

Figure 4. Receiver-Transmitter Group OA–128/CPS–6B, Front View (Sheet 2 of 5 sheets, Index Nos. 25 thru 167)

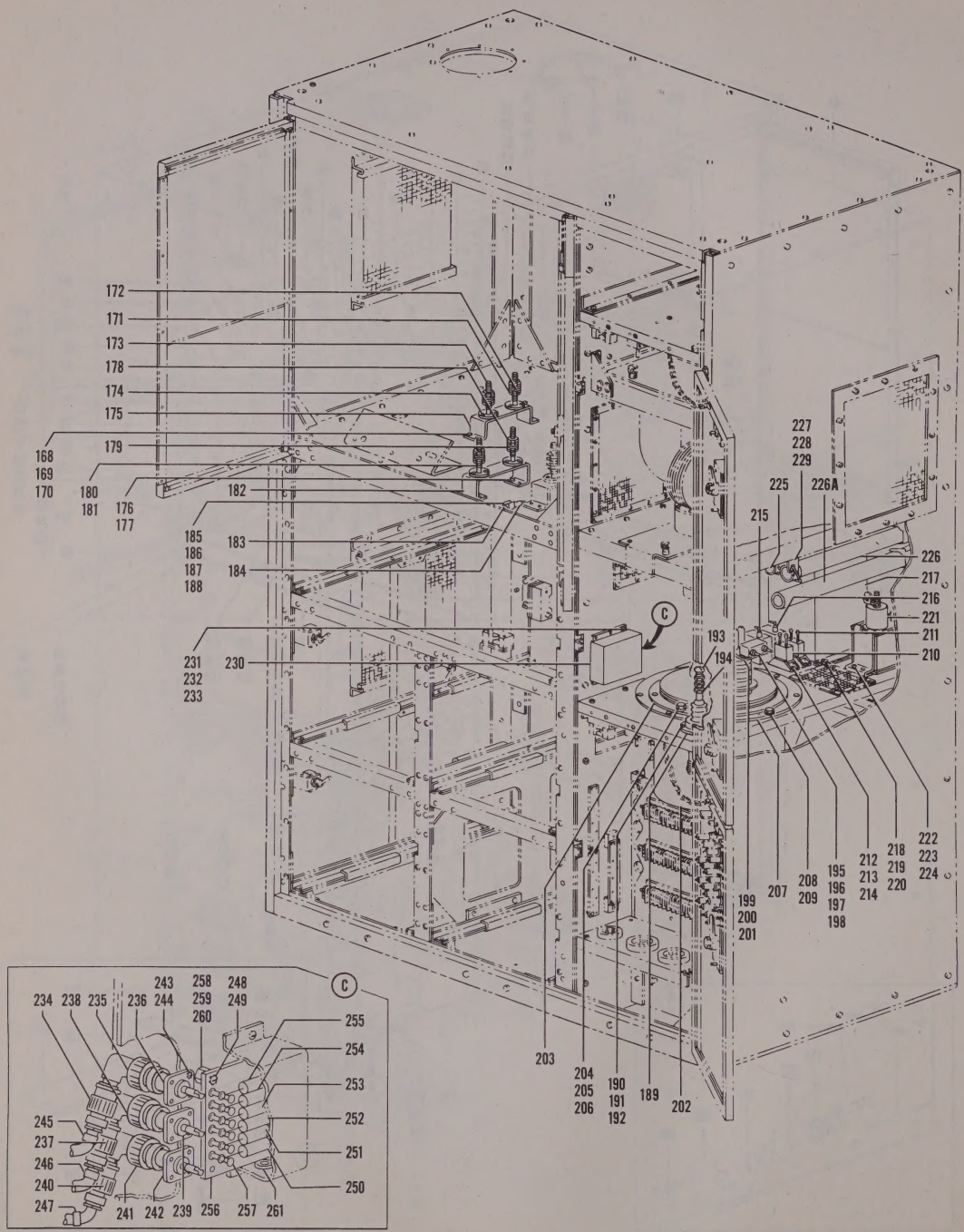

Figure 4. Receiver-Transmitter Group OA–128/CPS–6B, Front View (Sheet 3 of 5 sheets, Index Nos. 168 thru 261)

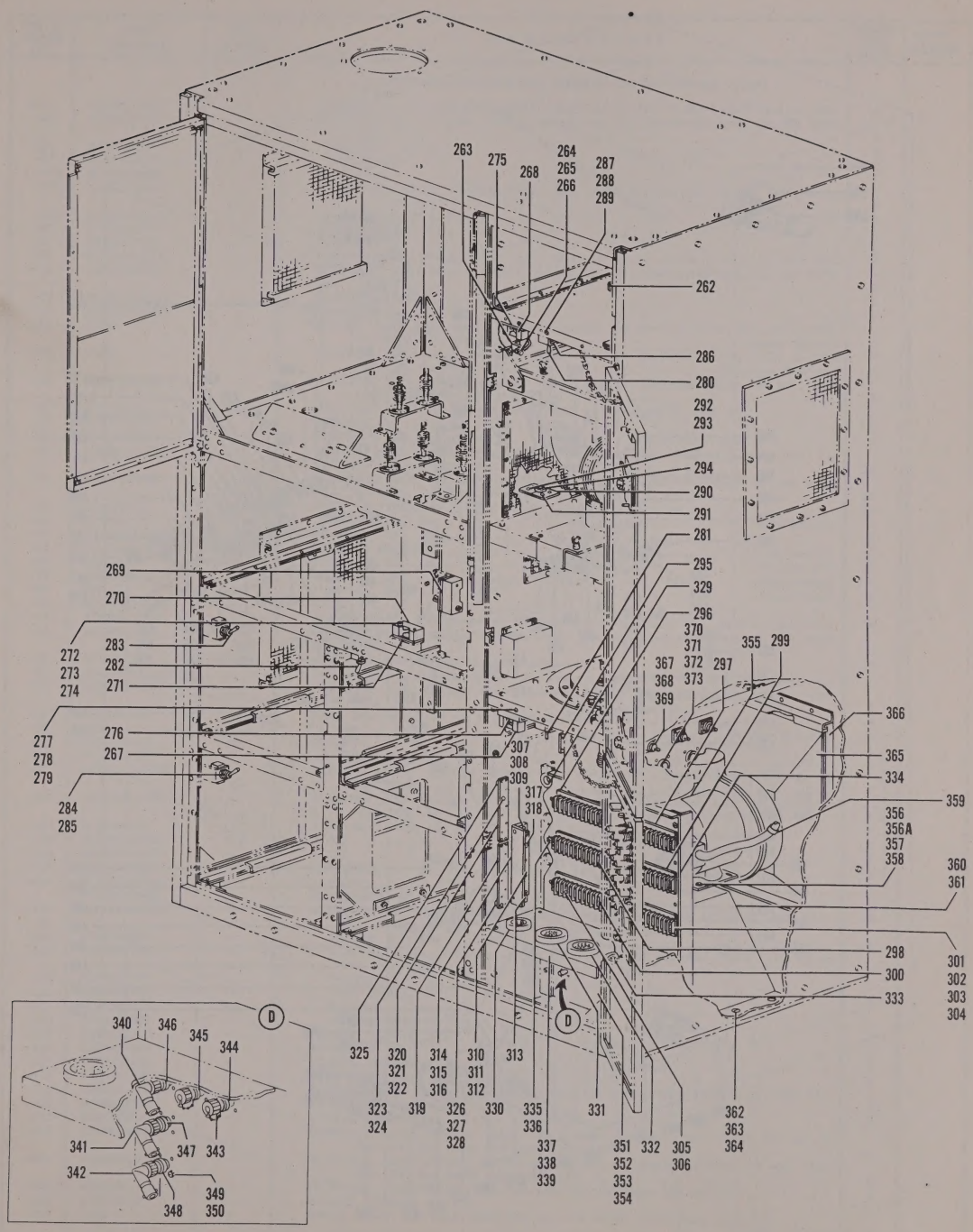

Figure 4. Receiver-Transmitter Group OA–128/CPS–6B, Front View (Sheet 4 of 5 sheets, Index Nos. 262 thru 373)

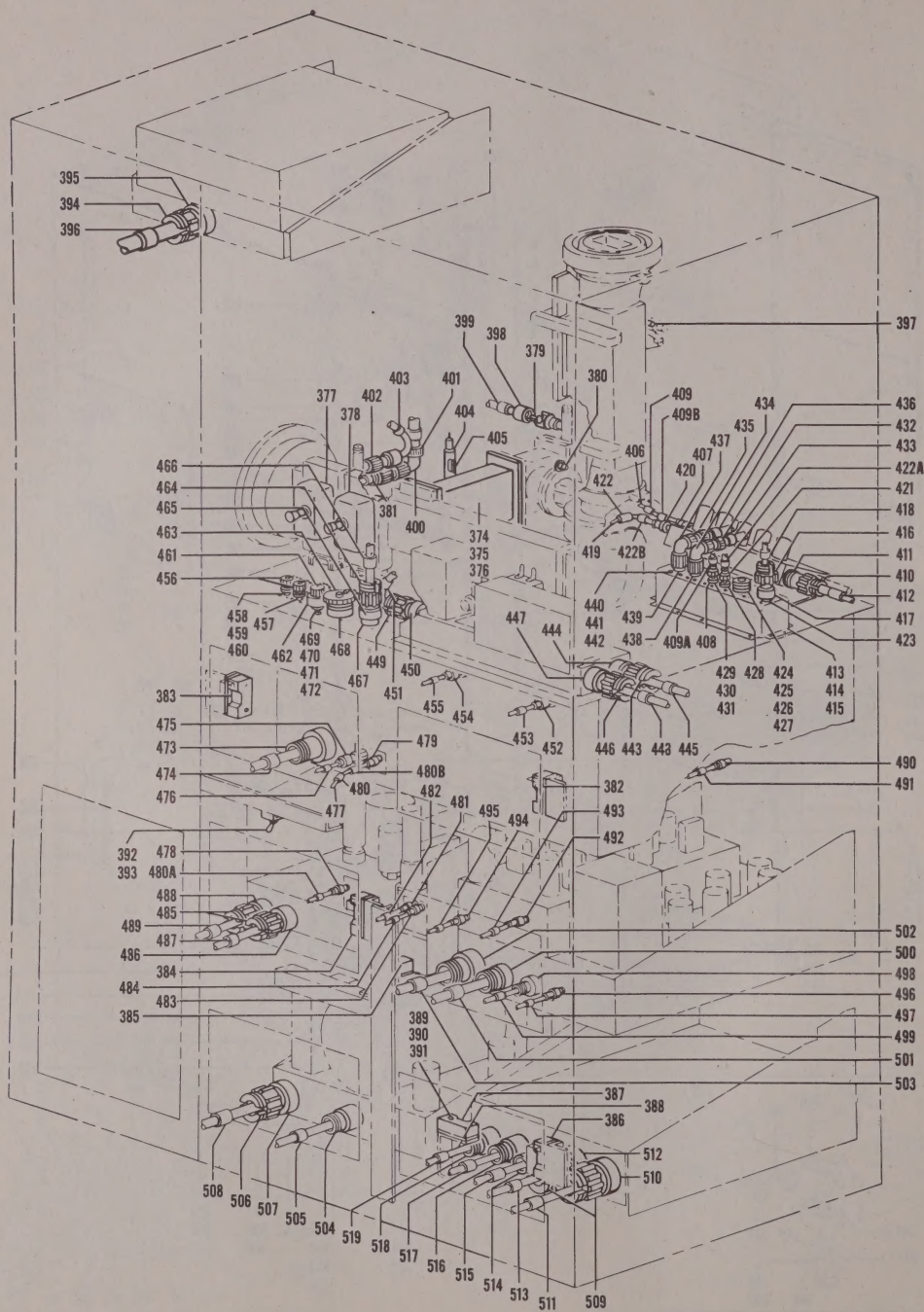

Figure 4. Receiver-Transmitter Group OA–128/CPS–6B, Rear View (Sheet 5 of 5 sheets, Index Nos. 374 thru 519)

FIG. & INDEX NO.	PART NUMBER	REF SYMBOL	NOMENCLATURE 1 2 3 4 5 6 7	UNITS PER ASSY	APPLI-CATION
			RECEIVER-TRANSMITTER GROUP OA–128/CPS–6B (Cont)		
4–64	AN520–10R7	—	. SCREW, mach: Phillips drive; RH; steel, cad pl; No. 10–32; 7/16 in lg (Att. Pt.)	5	
–65	AN936B10B	—	. WASHER, lock: bronze, tinned; round, No. 10; shakeproof-type, tw ext teeth (Att. Pt.)	5	
–66	K7126123P4	—	. . SCREW, captive	2	
–67	K7128235P2	—	. . BUSHING	2	
–67A	M7403515P1	—	. . HINGE	1	
–67B	AN510–10R7	—	. . SCREW, mach: Phillips drive; FH; steel, cad pl; No. 10–32; 7/16 in lg (Att. Pt.)	5	
–67C	K7861714P15	—	. . NUT, lock (Att. Pt.)	5	
–68	P7772595P2	—	. . SHELF, mounting	1	
–69	K7001209P1	—	. BRACKET	1	
–70	AN520–10R7	—	. SCREW, mach: Phillips drive; RH; steel, cad pl; No. 10–32; 7/16 in lg (Att. Pt.)	3	
–71	AN936B10B	—	. WASHER, lock: bronze, tinned; round, No. 10; shakeproof-type, tw ext teeth (Att. Pt.)	3	
–72	ML7403599G1	—	. BRACKET	1	
–73	ML7001565G1	—	. BRACKET	1	
–74	Coml	—	. SCREW, mach: slot drive; hex head; brass, cad pl; 1/4 in–20; 3/4 in lg (Att. Pt. for items 72 and 73) (Amer Screw)	8	
–75	Coml	—	. WASHER, flat: steel, cad pl; round, 5/16 in ID, 3/4 in OD, 0.063 in thk (Att. Pt. for items 72 and 73) (Wrought Washer)	8	
–76	AN936B416B	—	. WASHER, lock: bronze, tinned; round, 1/4 in; shakeproof-type, tw ext teeth (Att. Pt. for items 72 and 73)	8	
–77	AN340–416	—	. NUT, hex: steel, cad pl; 1/4 in–20 (Att. Pt. for items 72 and 73)	8	
–78	K7000552P1	—	. GUSSET	2	
–79	K7000552P2	—	. GUSSET	2	
–80	AN520–10R8	—	. SCREW, mach: Phillips drive; RH; steel, cad pl; No. 10–32; 1/2 in lg (Att. Pt. for items 78 and 79)	12	
–81	AN936B10B	—	. WASHER, lock: bronze, tinned; round, No. 10; shakeproof-type, tw ext teeth (Att. Pt. for items 78 and 79)	12	
–82	AN345–10	—	. NUT, hex: steel, cad pl; No. 10–32 (Att. Pt. for items 78 and 79)	12	
–83	K37212	P2705	. CONNECTOR, plug (Millen)	1	
–84	K7003097P1	—	. TUBING	1	
–85	101P2GE	S2719	. SWITCH, pressure (Coral Design)	1	
–86	1824	—	. WASHER, lock (Att. Pt.) (Shakeproof)	1	
–87	62F	—	. FITTING, pipe (Imperbrass)	1	
–88	68F	—	. FITTING, pipe (Imperbrass)	1	
–89	ML7404390G1	—	. BRACKET	1	
–90	AN520–10R8	—	. SCREW, mach: Phillips drive; RH; steel, cad pl; No. 10–32; 1/2 in lg (Att. Pt.)	4	
–91	AN936B10B	—	. WASHER, lock: bronze, tinned; round, No. 10; shakeproof-type, tw ext teeth (Att. Pt.)	4	
–92	P7700709P1	B2701	. BLOWER (See Figure 53 for breakdown)	1	
–93	AN515–416R10	—	. SCREW, mach: Phillips drive; RH; steel, cad pl; 1/4 in–20; 5/8 in lg (Att. Pt.)	4	
–94	AN936B416B	—	. WASHER, lock: bronze, tinned; round, 1/4 in; shakeproof-type, tw ext teeth (Att. Pt.)	4	
–95	AN340–416	—	. NUT, hex: steel, cad pl; 1/4 in–20 (Att. Pt.)	4	
–96	3302	—	. CLAMP (Thomas & Betts)	1	
–97	K7004265P1	—	. CLAMP	1	
–98	P7700660P1	—	. BRACKET	1	
–99	AN515–416R8	—	. SCREW, mach: Phillips drive; RH; steel, cad pl; 1/4 in–20; 1/2 in lg (Att. Pt.)	6	
–100	AN936B416B	—	. WASHER, lock: bronze, tinned; round, 1/4 in; shakeproof-type, tw ext teeth (Att. Pt.)	6	
–101	AN340–416	—	. NUT, hex: steel, cad pl; 1/4 in–20 (Att. Pt.)	6	
–102	ML7600463G1	—	. DUCT	1	
–103	ML7665366G1	—	. DUCT	1	
–104	M7403529P1	—	. CLEANER, air	3	
–105	W7353300P44	—	. GASKET	4	
	ML7000635G1	—	. FASTENER, latch	1	
–106	AN510–416R8	—	. SCREW, mach: Phillips drive; FH; steel, cad pl; 1/4 in–20; 1/2 in lg (Att. Pt.)	4	
✦					
–109	K7000634P1	—	. . PLATE, retainer	1	
–110	AN505–6R7	—	. . SCREW, mach: Phillips drive; FH; steel, cad pl; No. 6–32; 7/16 in lg (Att. Pt.)	3	
–111	K7000511P1	—	. . PLUNGER	1	
–112	K7000550P1	—	. . PIN, locking	1	
–113	K7000633P1	—	. . SPRING	1	
–114	K7000632P1	—	. . BLOCK, latch	1	
–115	K7126123P4	—	. SCREW, captive	4	
–116	K7128235P2	—	. BUSHING	4	
–117	M7483055P1	—	. PLATE, mounting	1	
–118	M7483054P1	—	. MOUNTING, tube	1	
–119	AN505–416R10	—	. SCREW, mach: Phillips drive; FH; steel, cad pl; 1/4 in–20; 5/8 in lg (Att. Pt.)	4	
–120	M7404497P1	—	. PLATE, reinforcing	2	
–121	K7004244P1	—	. COLLAR, spacing	4	
–122	AN505–4R10	—	. SCREW, mach: Phillips drive; FH; steel, cad pl; No. 4–40; 5/8 in lg (Att. Pt. for items 120 and 121)	4	
–123	AN936B4B	—	. WASHER, lock: bronze, tinned; round, No. 4; shakeproof-type, tw ext teeth (Att. Pt. for items 120 and 121)	4	
–124	AN340–4	—	. NUT, hex: steel, cad pl; No. 4–40 (Att. Pt. for items 120 and 121)	4	
–125	K7005651P2	—	. BLOCK, pressure	1	
–126	Coml	—	. BOLT, mach: hex head; steel, cad pl; 1/4 in–20; 1-1/4 in lg (Att. Pt.) (Amer Screw)	2	
–127	AN936B416B	—	. WASHER, lock: bronze, tinned; round, 1/4 in; shakeproof-type, tw ext teeth (Att. Pt.)	2	

FIG. & INDEX NO.	PART NUMBER	REF SYMBOL	NOMENCLATURE 1 2 3 4 5 6 7	UNITS PER ASSY	APPLI-CATION
			RECEIVER-TRANSMITTER GROUP OA–128/CPS–6B (Cont)		
4–128	K7005651P1	—	. BLOCK, pressure	1	
–129	AN515–416R8	—	. SCREW, mach: Phillips drive; RH; steel, cad pl; 1/4 in–20; 1/2 in lg (Att. Pt.)	2	
–130	AN936B416B	—	. WASHER, lock: bronze, tinned; round, 1/4 in; shakeproof-type, tw ext teeth (Att. Pt.)	2	
–131	P7703144P1	—	. BRACKET	1	
–132	AN520–10R8	—	. SCREW, mach: Phillips drive; RH; steel, cad pl; No. 10–32; 1/2 in lg (Att. Pt.)	4	
–133	AN936B10B	—	. WASHER, lock: bronze, tinned; round, No. 10; shakeproof-type, tw ext teeth (Att. Pt.)	4	
–134	K7005787P1	—	. GUIDE, drawer	2	
–135	AN510–10–5	—	. SCREW, mach: slot drive; FH; steel, cad pl; No. 10–32; 5/16 in lg (Att. Pt.)	6	
–136	M7480544P20F	—	. COLLAR, spacing	6	
–137	AN520–10–5	—	. SCREW, mach: slot drive; RH; steel, cad pl; No. 10–32; 5/16 in lg (Att. Pt.)	6	
–138	AN936B10B	—	. WASHER, lock: bronze, tinned; round, No. 10; shakeproof-type, tw ext teeth (Att. Pt.)	6	
–139	K7004391P1	—	. BRACKET	1	
–140	AN520–10R8	—	. SCREW, mach: Phillips drive; RH; steel, cad pl; No. 10–32; 1/2 in lg (Att. Pt.)	4	
–141	AN936B10B	—	. WASHER, lock: bronze, tinned; round, No. 10; shakeproof-type, tw ext teeth (Att. Pt.)	4	
–142	AN340–10	—	. NUT, hex: steel, cad pl; No. 10–32 (Att. Pt.)	4	
–143	ML7001501G1	—	. STUD SUBASSEMBLY	1	
–144	AN510–10–8	—	. SCREW, mach: slot drive; FH; steel, cad pl; No. 10–32; 1/2 in lg (Att. Pt.)	3	
–145	AN340–616	—	. NUT, hex: steel, cad pl; 3/8 in–16	4	
–146	AN960–616	—	. WASHER, flat: steel, cad pl; 3/8 in	2	
–147	CP70B1FF805K	C2705	. CAPACITOR, fixed	1	
–148	CP70B1FF805K	C2707	. CAPACITOR, fixed	1	
–149	CP70B1FF805K	C2706	. CAPACITOR, fixed	1	
–150	CP07SC2	—	. CLAMP (Att. Pt. for items 147, 148 and 149)	6	
–151	AN345–10	—	. NUT, hex: steel, cad pl; No. 10–32 (Att. Pt. for items 147, 148 and 149)	12	
–152	AN936B10B	—	. WASHER, lock: bronze, tinned; round, No. 10; shakeproof-type, tw ext teeth (Att. Pt. for items 147, 148 and 149)	12	
	ML7404965G1	—	. COVER SUBASSEMBLY	1	
–153	AN505–10–10	—	. SCREW, mach: slot drive; FH; steel, cad pl; No. 10–32; 5/8 in lg (Att. Pt.)	1	
–154	AN505–10–8	—	. SCREW, mach: slot drive; FH; steel, cad pl; No. 10–32; 1/2 in lg (Att. Pt.)	1	
–155	AN936B10B	—	. WASHER, lock: bronze, tinned; round, No. 8; shakeproof-type, tw ext teeth (Att. Pt.)	2	
–156	AN345–10	—	. NUT, hex: steel, cad pl; No. 10–32 (Att. Pt.)	2	
–157	K7128212P1	—	. . KNOB	2	
–158	AN505–8–7	—	. . SCREW, mach: slot drive; FH; steel, cad pl; No. 8–32; 7/16 in lg (Att. Pt.)	2	
–159	AN936B8B	—	. . WASHER, lock: bronze, tinned; round, No. 8; shakeproof-type, tw ext teeth (Att. Pt.)	2	
–160	K7004687P1	—	. . BRACKET	1	
–161	K7004686P1	—	. . BRACKET	1	
–162	AN510–10R7	—	. . SCREW, mach: slot drive; FH; steel, cad pl; No. 10–32; 7/16 in lg (Att. Pt. for items 160 and 161)	2	
–163	AN936B10B	—	. . WASHER, lock: bronze, tinned; round, No. 10; shakeproof-type, tw ext teeth (Att. Pt. for items 160 and 161)	4	
–164	AN345–10	—	. . NUT, hex: steel, cad pl; No. 10–32 (Att. Pt. for items 160 and 161)	2	
–165	K7867274P21	—	. . NUT, thumb (Att. Pt. for items 160 and 161)	2	
–166	M7404966P2	—	. . PLATE, cover	1	
–167	M7404966P1	—	. . PLATE, cover	1	
	ML7403505G1	—	. SUPPORT, wave guide	1	
–168	AN520–10R8	—	. SCREW, mach: Phillips drive; RH; steel, cad pl; No. 10–32; 1/2 in lg (Att. Pt.)	4	
–169	AN936B10B	—	. WASHER, lock: bronze, tinned; round, No. 10; shakeproof-type, tw ext teeth (Att. Pt.)	4	
–170	AN345–10	—	. NUT, hex: steel, cad pl; No. 10–32 (Att. Pt.)	4	
–171	AN340–616	—	. . NUT, hex: steel, cad pl; 3/8 in–16	8	
–172	Coml	—	. . WASHER, flat: steel, cad pl; round, 13/32 in ID, 3/4 in OD, 1/16 in thk (Wrought Washer)	4	
–173	ML7001501G1	—	. . STUD SUBASSEMBLY	2	
–174	AN510–10R8	—	. . SCREW, mach: Phillips drive; FH; steel, cad pl; No. 10–32; 1/2 in lg (Att. Pt.)	6	
–175	ML7001500G1	—	. . SUPPORT, wave guide	1	
	ML7403505G2	—	. SUPPORT, wave guide	1	
–176	AN520–10R7	—	. SCREW, mach: Phillips drive; RH; steel, cad pl; No. 10–32; 7/16 in lg (Att. Pt.)	4	
–177	AN936B10B	—	. WASHER, lock: bronze, tinned; round, No. 10; shakeproof-type, tw ext teeth (Att. Pt.)	4	
–178	AN340–616	—	. . NUT, hex: steel, cad pl; 3/8 in–16	8	
–179	Coml	—	. . WASHER, flat: steel, cad pl; round, 13/32 in ID, 3/4 in OD, 1/16 in thk (Wrought Washer)	4	
–180	ML7001501G1	—	. . STUD SUBASSEMBLY	2	
–181	AN510–10R8	—	. . SCREW, mach: Phillips drive; FH; steel, cad pl; No. 10–32; 1/2 in lg (Att. Pt.)	6	
–182	ML7403861G1	—	. . SUPPORT, wave guide	1	
–183	1N21B	CR2701	. CRYSTAL BLANK, quartz	1	
–184	K7003033P1	—	. HOLDER, crystal	1	
–185	TH15	—	. CLIP (Mallory)	1	
–186	AN515–4R6	—	. SCREW, mach: Phillips drive; RH; steel, cad pl; No. 4–40; 3/8 in lg (Att. Pt.)	2	
–187	AN936B4B	—	. WASHER, lock: bronze, tinned; round, No. 4; shakeproof-type, tw ext teeth (Att. Pt.)	2	
–188	AN340–4	—	. NUT, hex: steel, cad pl; No. 4–40 (Att. Pt.)	2	
–189	UG37A/U	J2701	. CONNECTOR, receptacle	1	
–190	AN520–10R8	—	. SCREW, mach: Phillips drive; RH; steel, cad pl; No. 10–32; 1/2 in lg (Att. Pt.)	6	
–191	AN936B10B	—	. WASHER, lock: bronze, tinned; round, No. 10; shakeproof-type, tw ext teeth (Att. Pt.)	6	

FIG. & INDEX NO.	PART NUMBER	REF SYMBOL	NOMENCLATURE 1 2 3 4 5 6 7	UNITS PER ASSY	APPLI-CATION
			RECEIVER-TRANSMITTER GROUP OA–128/CPS–6B (Cont)		
4–192	AN345–10	—	. NUT, hex: steel, cad pl; No. 10–32 (Att. Pt.)	6	
–193	AN515–5–12	—	. SCREW, mach: slot drive; RH; steel, cad pl; No. 5–40; 3/4 in lg	1	
–194	AN340–5	—	. NUT, hex: steel, cad pl; No. 5–40	3	
–195	CP53B1FF504K	C2702	. CAPACITOR, fixed	1	
–196	AN515–8R6	—	. SCREW, mach: Phillips drive; RH; steel, cad pl; No. 8–32; 3/8 in lg (Att. Pt.)	2	
–197	AN936B8B	—	. WASHER, lock: bronze, tinned; round, No. 8; shakeproof-type, tw ext teeth (Att. Pt.)	2	
–198	AN340–8	—	. NUT, hex: steel, cad pl; No. 8–32 (Att. Pt.)	2	
–199	K7003617P1	—	. PLATE, mounting	1	
–200	K7893938P2	—	. NUT, hex (Att. Pt.)	2	
–201	AN936B10B	—	. WASHER, lock: bronze, tinned; round, No. 10; shakeproof-type, tw ext teeth (Att. Pt.)	2	
–202	K2795	T2701	. TRANSFORMER, pulse (GE)	1	
–203	MTSH29	—	. GASKET (Metal Textile)	1	
–204	Coml	—	. SCREW, mach: hex head; brass, cad pl; 5/16 in–18; 5/8 in lg (Att. Pt. for items 202 and 203) (Amer Screw)	8	
–205	AN936B516B	—	. WASHER, lock: bronze, tinned; round, 5/16 in; shakeproof-type, tw ext teeth (Att. Pt. for items 202 and 203)	8	
–206	AN340–516	—	. NUT, hex: steel, cad pl; 5/16 in–18 (Att. Pt. for items 202 and 203)	8	
–207	P7772570P1	—	. DISK, mounting	1	
–208	Coml	—	. SCREW, mach: hex head; brass, cad pl; 3/8 in–16; 3/4 in lg (Att. Pt.) (Amer Screw)	6	
–209	AN936B616B	—	. WASHER, lock: bronze, tinned; round, 3/8 in; shakeproof-type, tw ext teeth (Att. Pt.)	6	
–210	CP63B1FG504K	C2703	. CAPACITOR, fixed	1	
–211	CP63B1FG504K	C2704	. CAPACITOR, fixed	1	
–212	AN515–6–7	—	. SCREW, mach: slot drive; RH; steel, cad pl; No. 6–32; 7/16 in lg (Att. Pt. for items 210 and 211)	4	
–213	AN936B6B	—	. WASHER, lock: bronze, tinned; round, No. 6; shakeproof-type, tw ext teeth (Att. Pt. for items 210 and 211)	4	
–214	AN340–6	—	. NUT, hex: steel, cad pl; No. 6–32 (Att. Pt. for items 210 and 211)	4	
–215	JX65A	Z2701	. SUPPRESSOR, electrical noise (Sprague)	1	
–216	JX65A	Z2702	. SUPPRESSOR, electrical noise (Sprague)	1	
–217	7482706	T2702	. TRANSFORMER, power (GE)	1	
–218	AN515–616–12	—	. SCREW, mach: slot drive; RH; steel, cad pl; 3/8 in–16; 3/4 in lg (Att. Pt.)	4	
–219	AN936B616B	—	. WASHER, lock: bronze, tinned; round, 3/8 in; shakeproof-type, tw ext teeth (Att. Pt.)	4	
–220	AN340–616	—	. NUT, hex: steel, cad pl; 3/8 in–16 (Att. Pt.)	4	
–221	26F700	C2701	. CAPACITOR, fixed (GE)	1	
–222	AN515–416–10	—	. SCREW, mach: slot drive; RH; steel, cad pl; 1/4 in–20; 5/8 in lg (Att. Pt.)	4	
–223	AN936B416B	—	. WASHER, lock: bronze, tinned; round, 1/4 in; shakeproof-type, tw ext teeth (Att. Pt.)	4	
–224	AN340–416	—	. NUT, hex: steel, cad pl; 1/4 in–20 (Att. Pt.)	4	
–225	RW11F101	R2701	. RESISTOR, fixed	1	
–226	RW11F101	R2702	. RESISTOR, fixed	1	
–226A	RW11F102	R2710	. RESISTOR, fixed	1	
–227	ML7770257G1	—	. CLIP SET	3	
–228	AN520–10R7	—	. SCREW, mach: Phillips drive; RH; steel, cad pl; No. 10–32; 7/16 in lg (Att. Pt.)	6	
–229	AN936B10B	—	. WASHER, lock: bronze, tinned; round, No. 10; shakeproof-type, tw ext teeth (Att. Pt.)	6	
–230	ML7483056G1	—	. COVER	1	
–231	AN515–8R6	—	. SCREW, mach: Phillips drive; RH; steel, cad pl; No. 8–32; 3/8 in lg (Att. Pt.)	6	
–232	AN936B8B	—	. WASHER, lock: bronze, tinned; round, No. 8; shakeproof-type, tw ext teeth (Att. Pt.)	6	
–233	AN340–8	—	. NUT, hex: steel, cad pl; No. 8–32 (Att. Pt.)	6	
–234	UG260/U	P2702	. CONNECTOR, plug	1	
–235	UG306/U	E2702	. CONNECTOR, adapter	1	
–236	UG290/U	J2702	. CONNECTOR, receptacle	1	
–237	UG260/U	P2703	. CONNECTOR, plug	1	
–238	UG306/U	E2703	. CONNECTOR, adapter	1	
–239	UG290/U	J2703	. CONNECTOR, receptacle	1	
–240	UG260/U	P2704	. CONNECTOR, plug	1	
–241	UG306/U	E2704	. CONNECTOR, adapter	1	
–242	UG290/U	J2704	. CONNECTOR, receptacle	1	
–243	AN520–3–4	—	. SCREW, mach: slot drive; RH; steel, cad pl; No. 3–56; 1/4 in lg (Att. Pt. for items 236, 239 and 242)	12	
–244	1103	—	. WASHER, lock (Att. Pt. for items 236, 239 and 242) (Shakeproof)	12	
–245	NP137410G	—	. MARKER, cable	1	
–246	NP137410H	—	. MARKER, cable	1	
–247	NP137410J	—	. MARKER, cable	1	
	ML7000669G1	—	. RESISTOR ASSEMBLY, fixed	1	
–248	AN515–8R4	—	. SCREW, mach: Phillips drive; RH; steel, cad pl; No. 8–32; 1/4 in lg (Att. Pt.)	4	
–249	AN93CB8B	—	. WASHER, lock: bronze, tinned; round, No. 8; shakeproof-type, tw ext teeth (Att. Pt.)	4	
–250	RC30BF151J	R2703	. . RESISTOR, fixed	1	
–251	RC30BF101J	R2704	. . RESISTOR, fixed	1	
–252	RC30BF680J	R2705	. . RESISTOR, fixed	1	
–253	RC30BF151J	R2706	. . RESISTOR, fixed	1	
–254	RC30BF101J	R2707	. . RESISTOR, fixed	1	
–255	RC30BF680J	R2708	. . RESISTOR, fixed	1	
	ML7000670G1	—	. . BOARD, terminal	1	
–256	K7000670P2	—	. . . PANEL	1	
–257	T100–3	—	. . . TERMINAL, stud (Bead Chain)	12	
–258	M7480544P17B	—	. POST, spacing	4	

FIG. & INDEX NO.	PART NUMBER	REF SYMBOL	NOMENCLATURE 1 2 3 4 5 6 7	UNITS PER ASSY	APPLI-CATION
			RECEIVER-TRANSMITTER GROUP OA–128/CPS–6B (Cont)		
4–259	AN515–8R4	—	. SCREW, mach: Phillips drive; RH; steel, cad pl; No. 8–32; 1/4 in lg (Att. Pt.)	4	
–260	AN936B8B	—	. WASHER, lock: bronze, tinned; round, No. 8; shakeproof-type, tw ext teeth (Att. Pt.)	4	
–261	M2R53P4	—	. GROMMET	1	
–262	M7403966P1	—	. SHAFT ASSEMBLY	1	
–263	ML7000661G1	—	. BRACKET	2	
–264	AN520–10R8	—	. SCREW, mach: Phillips drive; RH; steel, cad pl; No. 10–32; 1/2 in lg (Att. Pt.)	4	
–265	AN936B10B	—	. WASHER, lock: bronze, tinned; round, No. 10; shakeproof-type, tw ext teeth (Att. Pt.)	4	
–266	AN345–10	—	. NUT, hex: steel, cad pl; No. 10–32 (Att. Pt.)	4	
–267	ML7460330G2	S2711A	. SWITCH, interlock	1	
–268	ML7460330G2	S2701A	. SWITCH, interlock	1	
–269	ML7460330G2	S2716A	. SWITCH, interlock	1	
–270	ML7460330G2	S2707A	. SWITCH, interlock	1	
–271	K7861392P1	—	. INSULATOR, plate	4	
–272	AN515–6R18	—	. SCREW, mach: Phillips drive; RH; steel, cad pl; No. 6–32; 1-1/8 in lg (Att. Pt. for items 267 thru 271)	8	
–273	AN936B6B	—	. WASHER, lock: bronze, tinned; round, No. 6; shakeproof-type, tw ext teeth (Att. Pt. for items 267 thru 271)	8	
–274	AN340–6	—	. NUT, hex: steel, cad pl; No. 6–32 (Att. Pt. for items 267 thru 271)	8	
–275	K7003398P1	—	. PLATE, angle	1	
–276	K7003398P2	—	. PLATE, angle	1	
–277	AN515–6R7	—	. SCREW, mach: Phillips drive; RH; steel, cad pl; No. 6–32; 7/16 in lg (Att. Pt. for items 275 and 276)	4	
–278	AN936B6B	—	. WASHER, lock: bronze, tinned; round, No. 6; shakeproof-type, tw ext teeth (Att. Pt. for items 275 and 276)	4	
–279	AN340–6	—	. NUT, hex: steel, cad pl; No. 6–32 (Att. Pt. for items 275 and 276)	4	
–280	ST22N	S2702	. SWITCH, toggle	1	
–281	ST22N	S2712	. SWITCH, toggle	1	
–282	ST22N	S2706	. SWITCH, toggle	1	
–283	ST22N	S2708	. SWITCH, toggle	1	
–284	ST22N	S2710	. SWITCH, toggle	1	
–285	1222–1	—	. WASHER, lock (Att. Pt. for items 280 thru 284) (Shakeproof)	5	
–2[illegible]	K7002858P1	—	. BRACKET	2	
–287	AN510–10R6	—	. SCREW, mach: Phillips drive; FH; steel, cad pl; No. 10–32; 3/8 in lg (Att. Pt.)	4	
–288	AN936B10B	—	. WASHER, lock. bronze, tinned; round, No. 10; shakeproof-type, tw ext teeth (Att. Pt.)	4	
–289	K7893938P2	—	. NUT, hex (Att. Pt.)	4	
–290	K7004390P1	—	. PLATE, mounting	2	
–291	AN515–6R7	—	. SCREW, mach: Phillips drive; RH; steel, cad pl; No. 6–32; 7/16 in lg (Att. Pt.)	2	
–292	AN515–6R4	—	. SCREW, mach: Phillips drive; RH; steel, cad pl; No. 6–32; 1/4 in lg (Att. Pt.)	2	
–293	AN936B6B	—	. WASHER, lock: bronze, tinned; round, No. 6; shakeproof-type, tw ext teeth (Att. Pt.)	4	
–294	M2R53P5	—	. GROMMET	1	
–295	MSX8–141	TB2709	. BOARD, terminal (Jones HB)	1	
–296	MSX12–141	TB2701	. BOARD, terminal (Jones HB)	1	
–297	MSX12–141	TB2702	. BOARD, terminal (Jones HB)	1	
–298	MSX12–141	TB2703	. BOARD, terminal (Jones HB)	1	
–299	MSX12–141	TB2704	. BOARD, terminal (Jones HB)	1	
–300	MSX12–141	TB2705	. BOARD, terminal (Jones HB)	1	
–301	MSX12–141	TB2706	. BOARD, terminal (Jones HB)	1	
–302	AN515–6R12	—	. SCREW, mach: Phillips drive; RH; steel, cad pl; No. 6–32; 3/4 in lg (Att. Pt. for items 295 thru 301)	28	
–303	AN936B6B	—	. WASHER, lock: bronze, tinned; round, No. 6; shakeproof-type, tw ext teeth (Att. Pt. for items 295 thru 301)	28	
–304	AN340–6	—	. NUT, hex: steel, cad pl; No. 6–32 (Att. Pt. for items 295 thru 301)	28	
–305	AN515–6R4	—	. SCREW, mach: Phillips drive; RH; steel, cad pl; No. 6–32; 1/4 in lg	160	
–306	AN936B6B	—	. WASHER, lock: bronze, tinned; round, No. 6; shakeproof-type, tw ext teeth	160	
	ML7001547G1	TB2707	. BOARD, terminal	1	
–307	AN515–8–12	—	. SCREW, mach: slot drive; RH; steel, cad pl; No. 8–32; 3/4 in lg (Att. Pt.)	2	
–308	AN936B8B	—	. WASHER, lock: bronze, tinned; round, No. 8; shakeproof-type, tw ext teeth (Att. Pt.)	2	
–309	AN340–8	—	. NUT, hex: steel, cad pl; No. 8–32 (Att. Pt.)	2	
–310	K7001545P1	—	. . BAR, bus	1	
–311	AN515–6–6	—	. . SCREW, mach: slot drive; RH; steel, cad pl; No. 6–32; 3/8 in lg (Att. Pt.)	4	
–312	AN936B6B	—	. . WASHER, lock: bronze, tinned; round, No. 6; shakeproof-type, tw ext teeth (Att. Pt.)	4	
–313	K7001546P1	—	. . BLOCK, spacing	2	
–314	K7005041P1	—	. . PLATE, insulating	1	
–315	AN515–6–6	—	. . SCREW, mach: slot drive; RH; steel, cad pl; No. 6–32; 3/8 in lg (Att. Pt.)	2	
–316	AN936B6B	—	. . WASHER, lock: bronze, tinned; round, No. 6; shakeproof-type, tw ext teeth (Att. Pt.)	2	
–317	AN520–10R5	—	. SCREW, mach: Phillips drive; RH; steel, cad pl; No. 10–32; 5/16 in lg	12	
–318	AN936B10B	—	. WASHER, lock: bronze, tinned; round, No. 10; shakeproof-type, tw int teeth	12	
–319	K7001545P1	TB2708	. BOARD, terminal	1	
–320	K7001545P1	TB2710	. BOARD, terminal	1	
–321	AN515–6R4	—	. SCREW, mach: Phillips drive; RH; steel, cad pl; No. 6–32; 1/4 in lg (Att. Pt. for items 319 and 320)	8	
–322	AN936B6B	—	. WASHER, lock: bronze, tinned; round, No. 6; shakeproof-type, tw ext teeth (Att. Pt. for items 319 and 320)	8	
–323	AN520–10R5	—	. SCREW, mach: Phillips drive; RH; steel, cad pl; No. 10–32; 5/16 in lg	24	
–324	AN936B10B	—	. WASHER, lock: bronze, tinned; round, No. 10; shakeproof-type, tw int teeth	24	
–325	K7007419P1	—	. POST, spacing	2	

FIG. & INDEX NO.	PART NUMBER	REF SYMBOL	1 2 3 4 5 6 7 NOMENCLATURE	UNITS PER ASSY	APPLI-CATION
			RECEIVER-TRANSMITTER GROUP OA–128/CPS–6B (Cont)		
4–326	M7480544P8B	—	POST, spacing	4	
–327	AN515–6R4	—	SCREW, mach: Phillips drive; RH; steel, cad pl; No. 6–32; 1/4 in lg (Att. Pt. for items 325 and 326)	8	
–328	AN936B6B	—	WASHER, lock: bronze, tinned; round, No. 6; shakeproof-type, tw ext teeth (Att. Pt. for items 325 and 326)	8	
–329	M2R53P25	—	GROMMET	3	
–330	C1149	J2716	CONNECTOR, receptacle (Buggie)	1	
–331	C1126	J2717	CONNECTOR, receptacle (Buggie)	1	
–332	C1128	J2718	CONNECTOR, receptacle (Buggie)	1	
–333	C1126	J2719	CONNECTOR, receptacle (Buggie)	1	
–334	T7665291P1	—	MOUNTING, bracket	1	
–335	AN520–10R7	—	SCREW, mach: Phillips drive; RH; steel, cad pl; No. 10–32; 7/16 in lg (Att. Pt.)	6	
–336	AN936B10B	—	WASHER, lock: bronze, tinned; round, No. 10; shakeproof-type, tw ext teeth (Att. Pt.)	6	
–337	P7703082P1	—	PLATE, mounting	1	
–338	AN520–10R7	—	SCREW, mach: Phillips drive; RH; steel, cad pl; No. 10–32; 7/16 in lg (Att. Pt.)	5	
–339	AN936B10B	—	WASHER, lock: bronze, tinned; round, No. 10; shakeproof-type, tw ext teeth (Att. Pt.)	5	
–340	UG306/U	E2720	CONNECTOR, adapter	1	
–341	UG306/U	E2721	CONNECTOR, adapter	1	
–342	UG306/U	E2722	CONNECTOR, adapter	1	
–343	CW–123/U	—	CAP AND CHAIN SUBASSEMBLY	2	
–344	UG262/U	J2727	CONNECTOR, receptacle	1	
–345	UG262/U	J2726	CONNECTOR, receptacle	1	
–346	UG262/U	J2720	CONNECTOR, receptacle	1	
–347	UG262/U	J2721	CONNECTOR, receptacle	1	
–348	UG262/U	J2722	CONNECTOR, receptacle	1	
–349	AN520–3–5	—	SCREW, mach: slot drive; RH; steel, cad pl; No. 3–56; 5/16 in lg (Att. Pt. for items 343 thru 348)	20	
–350	1103	—	WASHER, lock (Att. Pt. for items 343 thru 348) (Shakeproof)	20	
–351	ML7772578G1	—	PLATE SUBASSEMBLY, cover	1	
–352	AN520–10–6	—	SCREW, mach: slot drive; RH; steel, cad pl; No. 10–32; 3/8 in lg (Att. Pt.)	14	
–353	AN936B10B	—	WASHER, lock: bronze, tinned; round, No. 10; shakeproof-type, tw ext teeth (Att. Pt.)	14	
–354	AN345–10	—	NUT, hex: steel, cad pl; No. 10–32 (Att. Pt.)	8	
–355	P7700708P1	B2702	BLOWER (See Figure 54 for breakdown)	1	
–356	Coml	—	SCREW, mach: hex head; brass, cad pl; 5/16 in–18; 3/4 in lg (Att. Pt.) (Amer Screw)	4	
–356A	Coml	—	WASHER, flat: brass, cad pl; round, 5/16 in ID, 3/4 in OD, 0.063 in thk (Att. Pt.) (Wrought Washer)	8	
–357	AN936B516B	—	WASHER, lock: bronze, tinned; round, 5/16 in; shakeproof-type, tw ext teeth (Att. Pt.)	4	
–358	AN340–516	—	NUT, hex: steel, cad pl; 5/16 in–18 (Att. Pt.)	4	
–359	3302	—	CLAMP (Thomas & Betts)	1	
–360	P7700653P1	—	MOUNTING, bracket	1	
–361	AN515–416–10	—	SCREW, mach: slot drive; RH; steel, cad pl; 1/4 in–20; 5/8 in lg (Att. Pt.)	3	
–362	AN505–416R10	—	SCREW, mach: Phillips drive; FH; steel, cad pl; 1/4 in–20; 5/8 in lg (Att. Pt.)	3	
–363	AN936E416B	—	WASHER, lock: bronze, tinned; round, 1/4 in; shakeproof-type, tw ext teeth (Att. Pt.)	6	
–364	AN340–416	—	NUT, hex: steel, cad pl; 1/4 in–20 (Att. Pt.)	6	
–365	ML7772566G1	—	DUCT	1	
–366	M7403529P2	—	CLEANER, air	1	
–367	UG290/U	—	CONNECTOR, receptacle	3	
–368	AN515–3R5	—	SCREW, mach: Phillips drive; RH; steel, cad pl; No. 3–56; 5/16 in lg (Att. Pt.)	12	
–369	1203	—	WASHER, lock (Att. Pt.) (Shakeproof)	12	
–370	9718122	—	CONNECTOR, receptacle (Amphenol)	2	
–371	AN515–4R6	—	SCREW, mach: Phillips drive; RH; steel, cad pl; No. 4–40; 3/8 in lg (Att. Pt.)	8	
–372	AN936B4B	—	WASHER, lock: bronze, tinned; round, No. 4; shakeproof-type, tw ext teeth (Att. Pt.)	8	
–373	AN340–4	—	NUT, hex: steel, cad pl; No. 4–40 (Att. Pt.)	8	
–374	368	V2502	TUBE, electron (Sylvania Prod)	1	
–375	AN520–10R6	—	SCREW, mach: Phillips drive; RH; steel, cad pl; No. 10–32; 3/8 in lg (Att. Pt.)	4	
–376	AN935–10	—	WASHER, lock: steel, cad pl; No. 10 (Att. Pt.)	4	
–377	345	V2507	TUBE, electron (Sylvania Prod)	1	
–378	345	V2508	TUBE, electron (Sylvania Prod)	1	
–379	1N21B	CR2601	CRYSTAL BLANK, quartz	1	
–380	1N21C	CR2501	CRYSTAL BLANK, quartz	1	
–381	1N21B	CR2502	CRYSTAL BLANK, quartz	1	
–382	ML7460330G2	S2713A	SWITCH, interlock	1	
–383	ML7460330G2	S2714A	SWITCH, interlock	1	
–384	ML7460330G2	S2715A	SWITCH, interlock	1	
–385	ML7460330G2	S2705A	SWITCH, interlock	1	
–386	ML7460330G2	S2717A	SWITCH, interlock	1	
–387	ML7460330G2	S2709A	SWITCH, interlock	1	
–388	K7861392P1	—	INSULATOR, plate	6	
–389	AN515–6R20	—	SCREW, mach: Phillips drive; RH; steel, cad pl; No. 6–32; 1-1/4 in lg (Att. Pt. for items 382 thru 388)	12	
–390	AN936B6B	—	WASHER, lock: bronze, tinned; round, No. 6; shakeproof-type, tw ext teeth (Att. Pt. for items 382 thru 388)	12	
–391	AN340–6	—	NUT, hex: steel, cad pl; No. 6–32 (Att. Pt. for items 382 thru 388)	12	
–392	ST22N	S2718	SWITCH, toggle	1	
–393	1222–1	—	WASHER, lock (Att. Pt.) (Shakeproof)	1	

FIG. & INDEX NO.	PART NUMBER	REF SYMBOL	NOMENCLATURE 1 2 3 4 5 6 7	UNITS PER ASSY	APPLI-CATION
			RECEIVER-TRANSMITTER GROUP OA-128/CPS-6B (Cont)		
4-394	AN3057-16	—	. CLAMP	1	
-395	AN3106-28-2S	P2801	. CONNECTOR, plug	1	
-396	NP137426A	—	. MARKER, cable	1	
-397	MJB1/200	F2701	. FUSE, cartridge (Buss)	1	
-398	UG18/U	P2502	. CONNECTOR, plug	1	
-399	NP140304A	—	. MARKER, cable	1	
-400	UG27A/U	E2503	. CONNECTOR, adapter	1	
-401	UG18/U	P2503	. CONNECTOR, plug	1	
-402	UG18/U	P2504	. CONNECTOR, plug	1	
-403	NP140304B	—	. MARKER, cable	1	
	ML7004274G2	—	. CABLE ASSEMBLY, RF	1	
-404	No Number	P2710	. . CONNECTOR, plug (K7004272P1, K7004273P1, K7876696P35 and K7898703P1, assembled)	1	
-405	P7770419P235	R2709	. RESISTOR, fixed	1	
	ML7008157G1	W2702	. CABLE ASSEMBLY, RF	1	
-406	RG71/U	—	. . CABLE, RF: 9-1/2 in lg	1	
-407	UG260/U	P102	. . CONNECTOR, plug	1	
-408	UG260/U	P2708	. . CONNECTOR, plug	1	
-409	NP144324R	—	. . MARKER, cable	1	
-409A	NP137410L	—	. . MARKER, cable	1	
-409B	NP137410R	—	. . MARKER, cable	1	
-410	AN3057-6	—	. CLAMP	1	
-411	AN3108-14S5S	P103	. CONNECTOR, plug	1	
-412	NP137426V	—	. MARKER, cable	1	
-413	P7703143P1	—	. COVER	1	
-414	AN520-10R7	—	. SCREW, mach: Phillips drive; RH; steel, cad pl; No. 10–32; 7/16 in lg (Att. Pt.)	14	
-415	AN936B10B	—	. WASHER, lock: bronze, tinned; round, No. 10; shakeproof-type, tw ext teeth (Att. Pt.)	14	
-416	AN3057-6	—	. CLAMP	1	
-417	AN3106-14S5P	P2706	. CONNECTOR, plug	1	
-418	NP137426G	—	. MARKER, cable	1	
	ML7008158G1	W2701	. CABLE ASSEMBLY, RF	1	
-419	RG59/U	—	. . CABLE, RF: 11-1/2 in lg	1	
-420	UG260/U	P101	. . CONNECTOR, plug	1	
-421	UG260/U	P2707	. . CONNECTOR, plug	1	
-422	NP144324P	—	. . MARKER, cable	1	
-422A	NP137410K	—	. . MARKER, cable	1	
-422B	NP137410P	—	. . MARKER, cable	1	
-423	AN3102-14S5S	J2706	. CONNECTOR, receptacle	1	
-424	AN3102-16-10S	J2728	. CONNECTOR, receptacle	1	
-425	AN515-4R6	—	. SCREW, mach: Phillips drive; RH; steel, cad pl; No. 4–40; 3/8 in lg (Att. Pt.)	8	
-426	AN936B4B	—	. WASHER, lock: bronze, tinned; round, No. 4; shakeproof-type, tw ext teeth (Att. Pt.)	8	
-427	AN340-4	—	. NUT, hex: steel, cad pl; No. 4–40 (Att. Pt.)	8	
-428	UG262/U	J2707	. CONNECTOR, receptacle	1	
-429	UG262/U	J2708	. CONNECTOR, receptacle	1	
-430	AN520-3-4	—	. SCREW, mach: slot drive; RH; steel, cad pl; No. 3–56; 1/4 in lg (Att. Pt. for items 428 and 429)	8	
-431	1103	—	. WASHER, lock (Att. Pt. for items 428 and 429) (Shakeproof)	8	
-432	UG18/U	P2724	. CONNECTOR, plug	1	
-433	NP137417B	—	. MARKER, cable	1	
-434	UG27A/U	E2724	. CONNECTOR, adapter	1	
-435	UG18/U	P2725	. CONNECTOR, plug	1	
-436	NP137417C	—	. MARKER, cable	1	
-437	UG27A/U	E2725	. CONNECTOR, adapter	1	
-438	UG19/U	J2724	. CONNECTOR, receptacle	1	
-439	UG19/U	J2725	. CONNECTOR, receptacle	1	
-440	AN515-4R6	—	. SCREW, mach: Phillips drive; RH; steel, cad pl; No. 4–40; 3/8 in lg (Att. Pt. for items 438 and 439)	8	
-441	AN936B4B	—	. WASHER, lock: bronze, tinned; round, No. 4; shakeproof-type, tw ext teeth (Att. Pt. for items 438 and 439)	8	
-442	AN340-4	—	. NUT, hex: steel, cad pl; No. 4–40 (Att. Pt. for items 438 and 439)	8	
-443	97-3057-10-6	—	. CLAMP (Amphenol)	1	
-444	AN3106-18-16P	P3502	. CONNECTOR, plug	1	
-445	NP137426E	—	. MARKER, cable	1	
-446	AN3057-10	—	. CLAMP	1	
-447	AN3106-18-16P	P3503	. CONNECTOR, plug	1	
-448	NP137426F	—	. MARKER, cable	1	
-449	AN3057-8	—	. CLAMP	1	
-450	AN3106-16-10S	P3501	. CONNECTOR, plug	1	
-451	NP137426D	—	. MARKER, cable	1	
-452	UG18/U	P711	. CONNECTOR, plug	1	
-453	NP137427A	—	. MARKER, cable	1	
-454	UG18/U	P715	. CONNECTOR, plug	1	
-455	NP137427B	—	. MARKER, cable	1	
-456	CW-123/U	—	. CAP AND CHAIN SUBASSEMBLY	2	
-457	UG262/U	J2712	. CONNECTOR, receptacle	1	
-458	UG262/U	J2713	. CONNECTOR, receptacle	1	
-459	AN520-3-5	—	. SCREW, mach: slot drive; RH; steel, cad pl; No. 3–56; 5/16 in lg (Att. Pt. for items 456, 457 and 458)	8	
-460	1103	—	. WASHER, lock (Att. Pt. for items 456, 457 and 458) (Shakeproof)	8	
	ML7003043G1	E2714	. CONNECTOR SUBASSEMBLY	1	
-461	9760-12	—	. . CAP AND CHAIN SUBASSEMBLY (Amphenol)	1	
-462	AN3106-14S5P	—	. . CONNECTOR, plug	1	
-463	9760-22	—	. CAP AND CHAIN SUBASSEMBLY (Amphenol)	1	

FIG. & INDEX NO.	PART NUMBER	REF SYMBOL	NOMENCLATURE 1 2 3 4 5 6 7	UNITS PER ASSY	APPLI-CATION
			RECEIVER-TRANSMITTER GROUP OA–128/CPS–6B (Cont)		
4–464	AN3057–16	—	. CLAMP	\1	
–465	AN3106–16–10P	P2709	. CONNECTOR, plug	1	
–466	NP137426H	—	. MARKER, cable	1	
–467	AN3102–16–10S	J2709	. CONNECTOR, receptacle	1	
–468	AN3102–22–33S	J2715	. CONNECTOR, receptacle	1	
–469	AN3102–14S5S	J2714	. CONNECTOR, receptacle	1	
–470	AN515–4R6	—	. SCREW, mach: Phillips drive; RH; steel, cad pl; No. 4–40; 3/8 in lg (Att. Pt. for items 467, 468 and 469)	12	
–471	AN936B4B	—	. WASHER, lock: bronze, tinned; round, No. 4; shakeproof-type, tw ext teeth (Att. Pt. for items 467, 468 and 469)	12	
–472	AN340–4	—	. NUT, hex: steel, cad pl; No. 4–40 (Att. Pt. for items 467, 468 and 469)	12	
–473	AN3108–28–2S	P719	. CONNECTOR, plug	1	
–474	NP137427C	—	. MARKER, cable	1	
–475	UG18/U	P701	. CONNECTOR, plug	1	
–476	NP137417D	—	. MARKER, cable	1	
	ML7008156G1	W2719	. CABLE ASSEMBLY, RF	1	
–477	RG55/U	—	. . CABLE, RF: 20-1/2 in lg	1	
–478	UG88/U	P602	. . CONNECTOR, plug	1	
–479	UG88/U	P702	. . CONNECTOR, plug	1	
–480	NP144324S	—	. . MARKER, cable	1	
–480A	NP137410B1	—	. . MARKER, cable	1	
–480B	NP137410A1	—	. . MARKER, cable	1	
–481	UG260/U	P603	. CONNECTOR, plug	1	
–482	NP137410C1	—	. MARKER, cable	1	
–483	UG260/U	P604	. CONNECTOR, plug	1	
–484	NP137410D1	—	. MARKER, cable	1	
–485	AN3057–12	—	. CLAMP	2	
–486	AN3106–22–33S	P605	. CONNECTOR, plug	1	
–487	NP137427D	—	. MARKER, cable	1	
–488	AN3106–22–33S	P606	. CONNECTOR, plug	1	
–489	NP137427E	—	. MARKER, cable	1	
–490	UG260/U	P2207	. CONNECTOR, plug	1	
–491	NP137410Z	—	. MARKER, cable	1	
–492	UG260/U	P302	. CONNECTOR, plug	1	
–493	NP137410S	—	. MARKER, cable	1	
–494	UG260/U	P305	. CONNECTOR, plug	1	
–495	NP137410V	—	. MARKER, cable	1	
–496	UG260/U	P2204	. CONNECTOR, plug	1	
–497	NP137410W	—	. MARKER, cable	1	
–498	AN3106–14S5P	P2203	. CONNECTOR, plug	1	
–499	NP137426Z	—	. MARKER, cable	1	
–500	AN3106–22–33S	P2201	. CONNECTOR, plug	1	
–501	NP137426X	—	. MARKER, cable	1	
–502	AN3106–28–2S	P2202	. CONNECTOR, plug	1	
–503	NP137426Y	—	. MARKER, cable	1	
–504	AN3106–22–23P	P3001	. CONNECTOR, plug	1	
–505	NP140089A	—	. MARKER, cable	1	
–506	AN3057–16	—	. CLAMP	1	
–507	AN3106–28–2S	P3002	. CONNECTOR, plug	1	
–508	NP137426B	—	. MARKER, cable	1	
–509	AN3057–20	—	. CLAMP	2	
–510	AN3106–32–12S	P3201	. CONNECTOR, plug	1	
–511	NP137426P	—	. MARKER, cable	1	
–512	AN3106–32–12P	P3202	. CONNECTOR, plug	1	
–513	NP137426R	—	. MARKER, cable	1	
–514	AN3106–22–33P	P3203	. CONNECTOR, plug	1	
–515	NP137426S	—	. MARKER, cable	1	
–516	AN3106–22–33P	P3204	. CONNECTOR, plug	1	
–517	NP137426T	—	. MARKER, cable	1	
–518	AN3106–22–33P	P3206	. CONNECTOR, plug	1	
–519	NP137426U	—	. MARKER, cable	1	

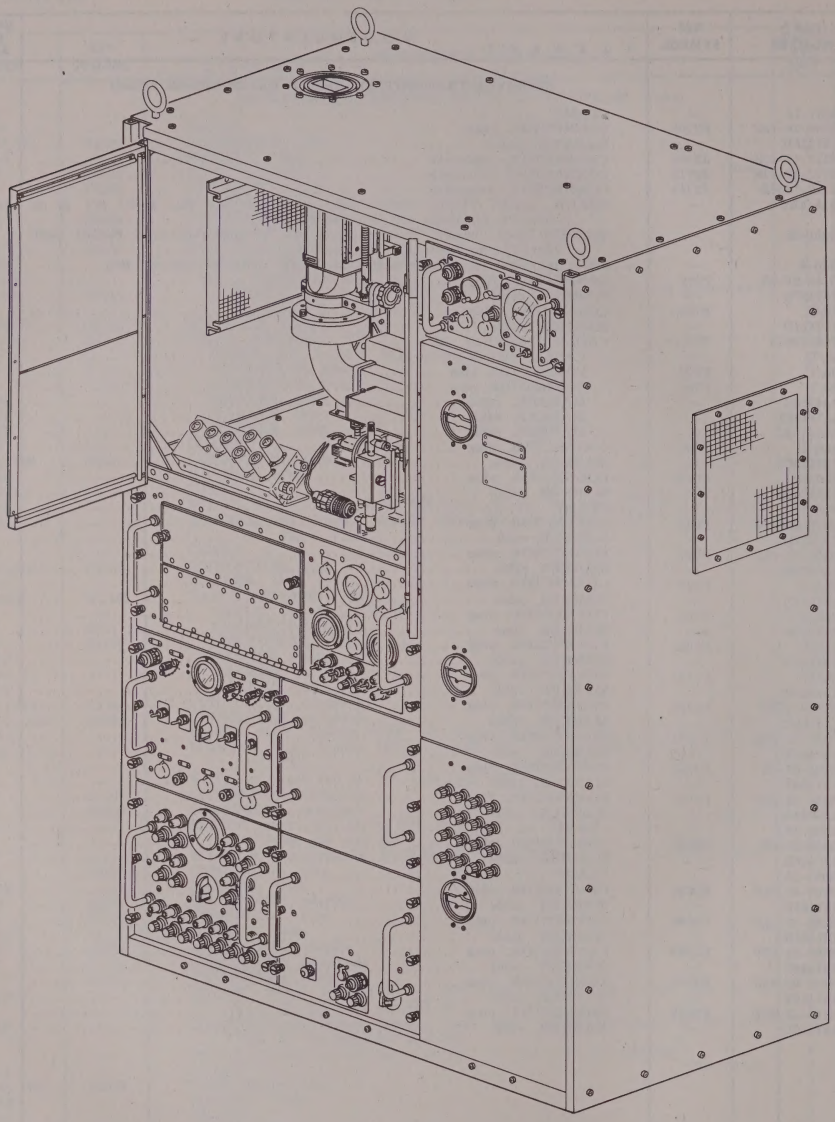

Figure 5. Receiver-Transmitter Group OA–126/CPS–6B

FIG. & INDEX NO.	PART NUMBER	REF SYMBOL	1 2 3 4 5 6 7 NOMENCLATURE	UNITS PER ASSY	APPLI-CATION
			RECEIVER-TRANSMITTER GROUP OA–126/CPS–6B		
5–	ML7353300G4	—	RECEIVER-TRANSMITTER GROUP OA–126/CPS–6B	1	
			(Identical to Figure 2, except for the following items)		
	NP140329	—	. PLATE, identification (Ref item 19, Figure 2)	1	
	1B56	V2505	. TUBE, electron (Ref item 382, Figure 2)	1	
	1B56	V2506	. TUBE, electron (Ref item 383, Figure 2)	1	

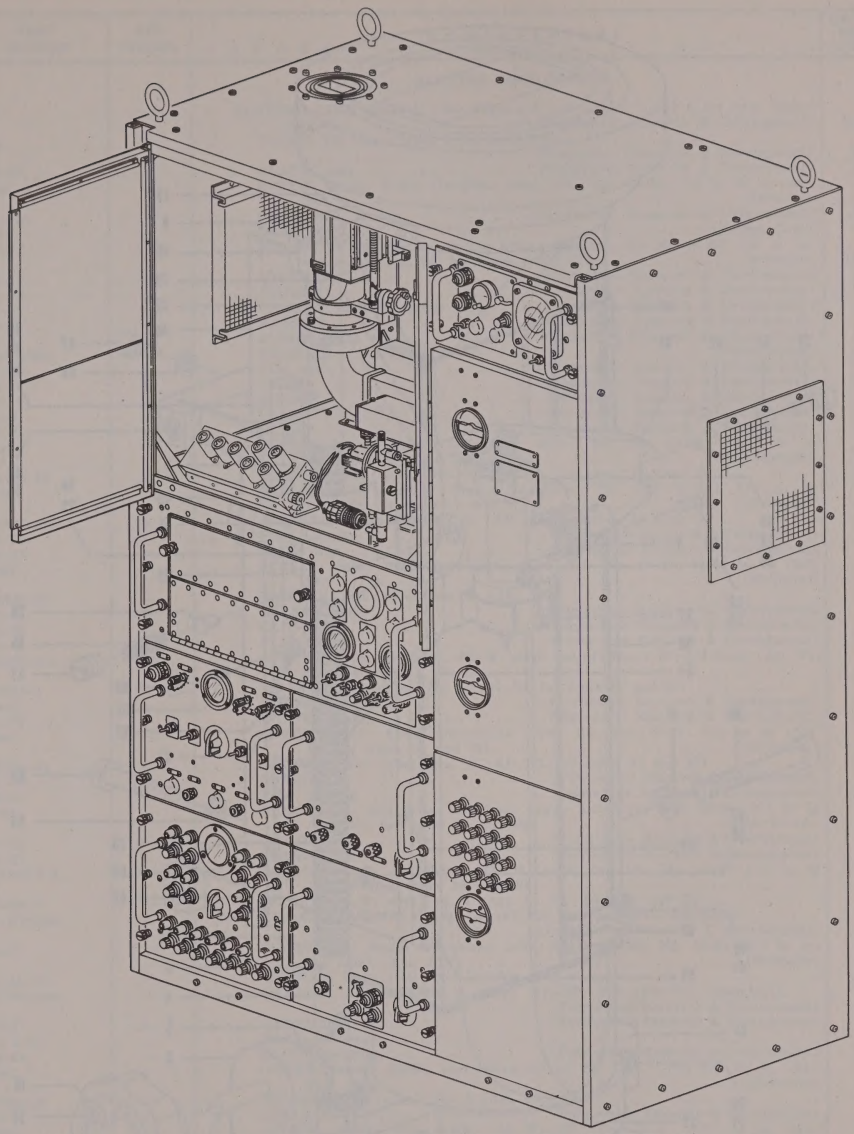

Figure 6. Receiver-Transmitter Group OA–127/CPS–6B

FIG. & INDEX NO.	PART NUMBER	REF SYMBOL	NOMENCLATURE 1 2 3 4 5 6 7	UNITS PER ASSY	APPLI-CATION
			RECEIVER-TRANSMITTER GROUP OA–127/CPS–6B		
6–	ML7353300G5	—	RECEIVER-TRANSMITTER GROUP OA–127/CPS–6B	1	
			(Identical to Figure 3, except for the following items)		
	NP140328	—	. PLATE, identification (Ref item 20, Figure 3).....	1	
	1B58	V2501	. TUBE, electron (Ref item 372, Figure 3).....	1	
	1B44	V2503	. TUBE, electron (Ref item 375, Figure 3).....	1	
	1B44	V2504	. TUBE, electron (Ref item 376, Figure 3).....	1	

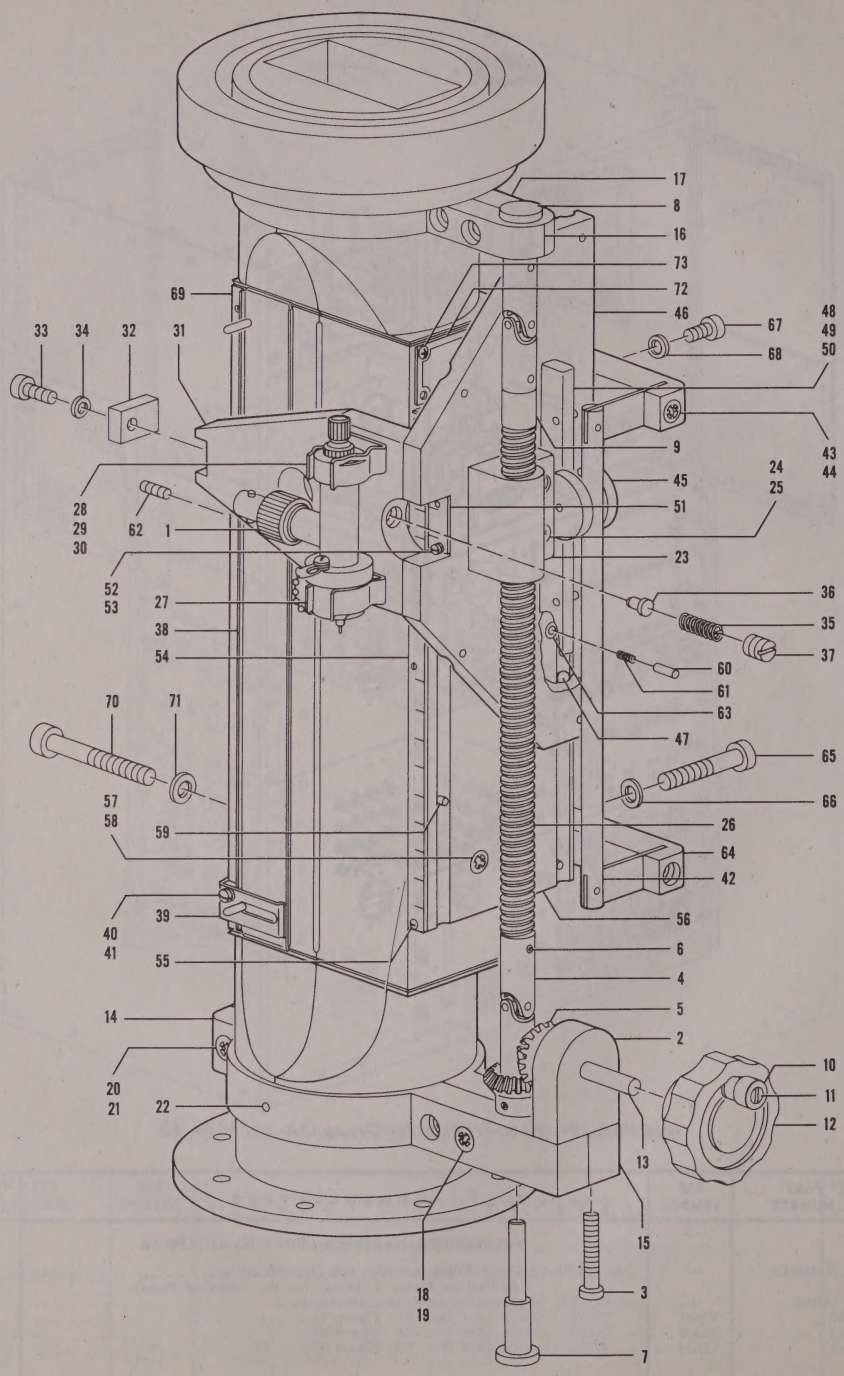

Figure 7. Slotted Line IM–23/U

FIG. & INDEX NO.	PART NUMBER	REF SYMBOL	NOMENCLATURE 1 2 3 4 5 6 7	UNITS PER ASSY	APPLI-CATION
			SLOTTED LINE IM–23/U		
7–	672	—	. SLOTTED LINE IM–23/U (See Figures 2–1, 3–1, 4–1, 5 and 6 for next higher assembly) (Polytechnic Research & Development)	Ref	
–1	669	—	. . PROBE, RF (See Figure 8 for breakdown) (Polytechnic Research & Development)	1	
–2	672–30	—	. . PLATE, gear (Polytechnic Research & Development)	1	
–3	Coml	—	. . SCREW, mach: Bristo six-spline drive; SS; No. 10–32; 1-1/16 in lg (Att. Pt.) (Bristolco)	2	
–4	672–14	—	. . COUPLING, flexible (Polytechnic Research & Development)	2	
–5	G464	—	. . GEAR SET (Boston Gear)	1	
–6	Coml	—	. . SCREW, set: Bristo four-spline drive; headless; SS, No. 6–32; 1/8 in lg; cup point (Att. Pt. for items 4 and 5) (Bristolco)	12	
–7	672–13	—	. . JOURNAL (Polytechnic Research & Development)	1	
–8	672–12	—	. . JOURNAL (Polytechnic Research & Development)	1	
–9	672–15	—	. . COLLAR, adjusting screw (Polytechnic Research & Development)	1	
–10	672–32	—	. . HANDLE (Polytechnic Research & Development)	1	
–11	672–33	—	. . SCREW, mach (Polytechnic Research & Development)	1	
–12	S310–64BB	—	. . KNOB (Kurz-Kasch)	1	
–13	672–66	—	. . PIN, drive (Polytechnic Research & Development)	1	
–14	672–10	—	. . CLAMP (Polytechnic Research & Development)	1	
–15	672–11	—	. . CLAMP (Polytechnic Research & Development)	1	
–16	672–8	—	. . CLAMP (Polytechnic Research & Development)	1	
–17	672–9	—	. . CLAMP (Polytechnic Research & Development)	1	
–18	Coml	—	. . SCREW, mach: Bristo four-spline drive; SS; No. 10–32; 13/16 in lg (Att. Pt. for items 14 thru 17) (Bristolco)	4	
–19	AN935–10	—	. . WASHER, lock: steel; No. 10 (Att. Pt. for items 14 thru 17)	4	
–20	Coml	—	. . SCREW, mach: Bristo four-spline drive; SS; 1/4 in–28; 3/4 in lg (Att. Pt. for items 14 thru 17) (Bristolco)	2	
–21	AN935–416	—	. . WASHER, lock: steel; 1/4 in (Att. Pt. for items 14 thru 17)	2	
–22	672–73	—	. . PIN, locating (Polytechnic Research & Development)	4	
–23	672–17	—	. . NUT, drive (Polytechnic Research & Development)	1	
–24	Coml	—	. . SCREW, mach: Bristo four-spline drive; SS; No. 10–32; 11/16 in lg (Att. Pt.) (Bristolco)	2	
–25	AN935–10	—	. . WASHER, lock: steel; No. 10 (Att. Pt.)	4	
–26	672–16	—	. . SCREW, drive (Polytechnic Research & Development)	1	
–27	672–36	—	. . CLIP (Polytechnic Research & Development)	1	
–28	672–72	—	. . CLIP (Polytechnic Research & Development)	1	
–29	AN500–4–4	—	. . SCREW, mach: slot drive; Fil H; steel, cad pl; No. 4–40; 1/4 in lg (Att. Pt. for items 27 and 28)	4	
–30	AN935–4	—	. . WASHER, lock: steel; No. 4 (Att. Pt. for items 27 and 28)	4	
–31	672–5	—	. . HOLDER, probe (Polytechnic Research & Development)	1	
–32	672–27	—	. . PLATE, catch (Polytechnic Research & Development)	1	
–33	Coml	—	. . SCREW, mach: Bristo four-spline drive; SS; No. 10–24; 1/2 in lg (Att. Pt. for items 31 and 32) (Bristolco)	3	
–34	AN935–10	—	. . WASHER, lock: steel; No. 10 (Att. Pt. for items 31 and 32)	3	
–35	672–35	—	. . SPRING (Polytechnic Research & Development)	1	
–36	672–34	—	. . PIN, locking (Polytechnic Research & Development)	1	
–37	Coml	—	. . SCREW, set: slot drive; headless; brass, nickel pl; 5/16 in–24; 1/4 in lg (Att. Pt. for items 35 and 36) (Amer Screw)	1	
–38	672–28	—	. . COVER (Polytechnic Research & Development)	1	
–39	672–29	—	. . SPRING (Polytechnic Research & Development)	2	
–40	AN500–4–4	—	. . SCREW, mach: slot drive; Fil H; steel, cad pl; No. 4–40; 1/4 in lg (Att. Pt. for items 38 and 39)	4	
–41	AN935–4	—	. . WASHER, lock: steel; No. 4 (Att. Pt. for items 38 and 39)	4	
–42	No Number	—	. . ROD SUBASSEMBLY, take-up (672P20, P22 and P47, assembled) (Polytechnic Research & Development)	1	
–43	Coml	—	. . SCREW, set: Bristo four-spline drive; headless; SS; No. 10–32; 3/8 in lg; flat point (Att. Pt.) (Bristolco)	2	
–44	AN935–10	—	. . WASHER, lock: steel; No. 10 (Att. Pt.)	2	
–45	No Number	—	. . BEARING SUBASSEMBLY, roller (672P23, P24 and P25, assembled) (Polytechnic Research & Development)	1	
–46	672–7	—	. . PANEL (Polytechnic Research & Development)	1	
–47	216–3–12	—	. . BALL, bearing	3	
–48	672–21	—	. . BLOCK, bearing (Polytechnic Research & Development)	1	
–49	Coml	—	. . SCREW, mach: Bristo four-spline drive; SS; No. 8–32; 3/8 in lg (Att. Pt.) (Bristolco)	2	
–50	AN935–8	—	. . WASHER, lock: steel; No. 8 (Att. Pt.)	2	
–51	672–26	—	. . SCALE (Polytechnic Research & Development)	1	
–52	Coml	—	. . SCREW, mach: slot drive; Fil H; SS; No. 2–56; 1/8 in lg (Att. Pt.) (Amer Screw)	2	
–53	AN935–2	—	. . WASHER, lock: steel; No. 2 (Att. Pt.)	2	
–54	672–18	—	. . SCALE (Polytechnic Research & Development)	1	
–55	AN935–00–3	—	. . SCREW, drive; slot drive; RH; steel, cad pl; No. 00; 3/16 in lg (Att. Pt.)	3	
–56	No Number	—	. . PLATE SUBASSEMBLY, bearing (672P6, P45 and P46, assembled) (Polytechnic Research & Development)	1	
–57	Coml	—	. . SCREW, mach: Bristo four-spline drive; SS; No. 10–32; 3/8 in lg (Att. Pt.) (Bristolco)	2	
–58	AN935–10	—	. . WASHER, lock: steel; No. 10 (Att. Pt.)	2	
–59	672–43	—	. . PIN, locating (Polytechnic Research & Development)	1	
–60	672–37	—	. . RETAINER, spring (Polytechnic Research & Development)	1	
–61	672–39	—	. . SPRING (Polytechnic Research & Development)	1	
–62	Coml	—	. . SCREW, set: Bristo four-spline drive; headless; SS; No. 8–32; 7/16 in lg; flat point (Bristolco)	1	
–63	672–38	—	. . BUSHING (Polytechnic Research & Development)	1	

FIG. & INDEX NO.	PART NUMBER	REF SYMBOL	NOMENCLATURE 1 2 3 4 5 6 7	UNITS PER ASSY	APPLI-CATION
			SLOTTED LINE IM–23/U (Cont)		
7–64	672–19	—	. . FOOT, mounting .....(Polytechnic Research & Development)	2	
–65	Coml	—	. . SCREW, mach: Bristo four-spline drive; SS; 1/4 in–28; 1-1/2 in lg (Att. Pt.) .....(Bristolco)	2	
–66	AN935–416	—	. . WASHER, lock: steel; 1/4 in (Att. Pt.).....	2	
–67	Coml	—	. . SCREW, set: Bristo four-spline drive; SS; No. 10–32; 3/8 in lg; flat point (Att. Pt.) .....(Bristolco)	2	
–68	AN935–10	—	. . WASHER, lock: steel; No. 10 (Att. Pt.).....	2	
–69	No Number	—	. . WAVE GUIDE SECTION (672P1 thru P4 assembled)..... .....(Polytechnic Research & Development)	1	
–70	Coml	—	. . SCREW, mach: Bristo four-spline drive; SS; 1/4 in–28; 2 in lg (Att. Pt. for 672P1 and P2; see item 69).....(Bristolco)	3	
–71	AN935–416	—	. . WASHER, lock: steel; 1/4 in (Att. Pt. for 672P1 and P2; see item 69).....	3	
–72	672–41	—	. . PLATE, identification .....(Polytechnic Research & Development)	1	
–73	Coml	—	. . SCREW, self-tapping: Phillips drive; Bind H; SS, black oxidized; No. 4–40; 1/4 in lg (Att. Pt.).....(Shakeproof)	4	
			RF PROBE		
8–	669	—	. . RF PROBE (See Figure 7–1 for next higher assembly)..... .....(Polytechnic Research & Development)	Ref	
	669A	—	. . . CONNECTOR SUBASSEMBLY, receptacle ....(Polytechnic Research & Development)	1	
–1	No Number	—	. . . . CONNECTOR, receptacle (669AP2, P3 and P4, assembled)..... .....(Polytechnic Research & Development)	1	
–2	669A1	—	. . . . SPRING.....(Polytechnic Research & Development)	1	
–3	669–11	—	. . . KNOB.....(Polytechnic Research & Development)	1	
–4	AN565A2H2	—	. . . SCREW, set: Allen drive; headless; steel, cad pl; No. 2–56; 1/8 in lg; flat point (Att. Pt.)	1	
–5	669–10	—	. . . NUT, knurled.....(Polytechnic Research & Development)	1	

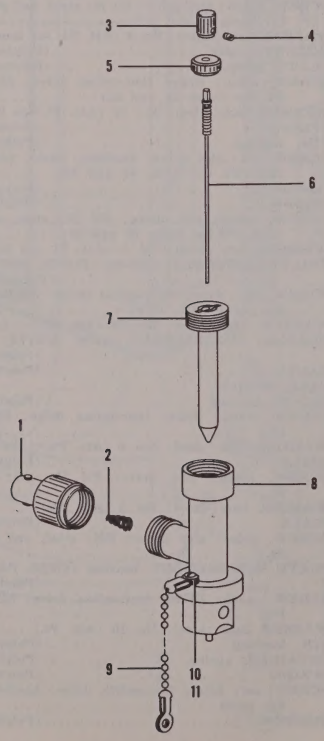

Figure 8. RF Probe

FIG. & INDEX NO.	PART NUMBER	REF SYMBOL	NOMENCLATURE 1 2 3 4 5 6 7	UNITS PER ASSY	APPLI-CATION
			RF PROBE (Cont)		
8–6	No Number	—	. . . SCREW SUBASSEMBLY, adjustment (669P9 and P17 assembled) ..... (Polytechnic Research & Development)	1	
–7	No Number	—	. . . SLEEVE SUBASSEMBLY, conductor (669P2, P3 and P8, assembled) ..... (Polytechnic Research & Development)	1	
–8	No Number	—	. . . HOUSING SUBASSEMBLY (669P4, P5, P6, P12, P13 and P15, assembled) ..... (Polytechnic Research & Development)	1	
–9	669–16	—	. . . CHAIN AND SWIVEL SUBASSEMBLY ..... (Polytechnic Research & Development)	1	
–10	669–17	—	. . . BEARING, pivot..... (Polytechnic Research & Development)	1	
–11	AN515–3–4	—	. . . SCREW, mach: slot drive; RH; steel, cad pl; No. 3–48; 1/4 in lg (Att. Pt. for items 9 and 10).....	1	
			DUPLEXER CU–193/CPS–6B		
9–	D1056–165	—	. DUPLEXER CU–193/CPS–6B (See Figures 2–4, 3–4, 5 and 6 for next higher assembly) ..... (Terpening)	Ref	
–1	B1056–156	—	. . MIXER, stage (See Figure 10 for breakdown)..... (Terpening)	1	
–2	Coml	—	. . SCREW, mach: Phillips drive; Fil H; steel, cad pl; No. 10–32; 7/8 in lg (Att. Pt.) ..... (Amer Screw)	4	
–3	AN935–10	—	. . WASHER, lock: steel, cad pl; No. 10 (Att. Pt.).....	4	
–4	B1056–190	—	. . MIXER, stage (See Figure 11 for breakdown)..... (Terpening)	1	
–5	Coml	—	. . SCREW, mach: Phillips drive; Fil H; SS; No. 8–32; 3/8 in lg (Att. Pt.) ..... (Amer Screw)	2	
–6	AN935–8L	—	. . WASHER, lock: steel, cad pl; No. 8 (Att. Pt.).....	2	
–7	C1056–180	—	. . CRYSTAL SHORTING BAR SECTION (See Figure 12 for breakdown) ..... (Terpening)	1	
–8	Coml	—	. . SCREW, mach: Phillips drive; Fil H; steel, cad pl; No. 10–32; 5/8 in lg (Att. Pt.)..... (Amer Screw)	4	
–9	AN935–10	—	. . WASHER, lock: steel, cad pl; No. 10 (Att. Pt.).....	4	
–10	D1056–170	—	. . DUPLEXER (See Figure 13 for breakdown)..... (Terpening)	1	
–11	A1056–1054	—	. . PLATE, identification..... (Terpening)	1	
–12	AN504–4–4	—	. . SCREW, self-tapping, slot drive; RH; steel, cad pl; No. 4–40; 1/4 in lg (Att. Pt.)	4	

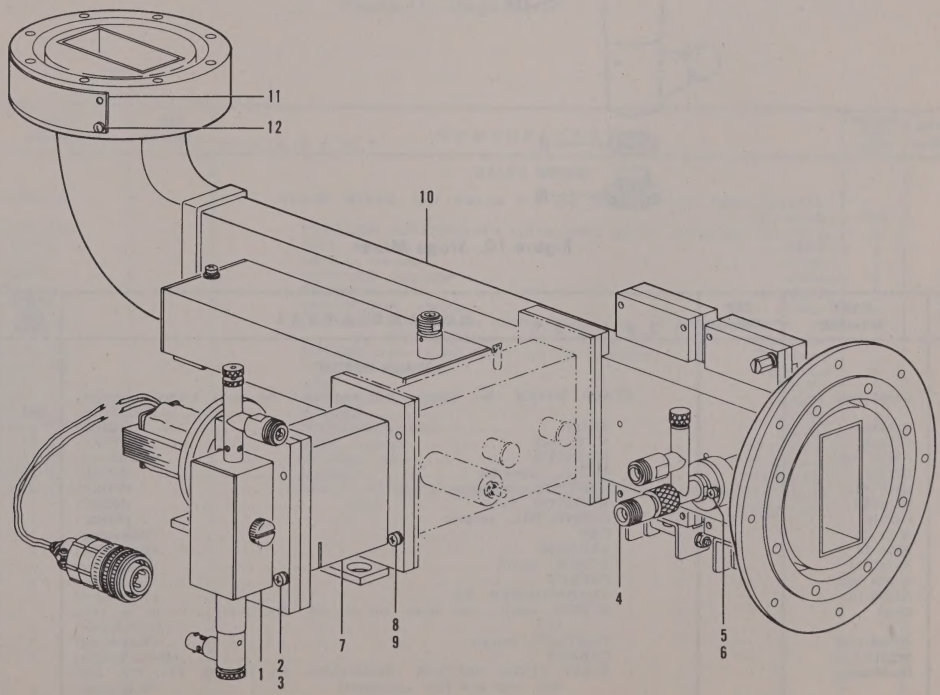

Figure 9. Duplexer CU–193/CPS–6B

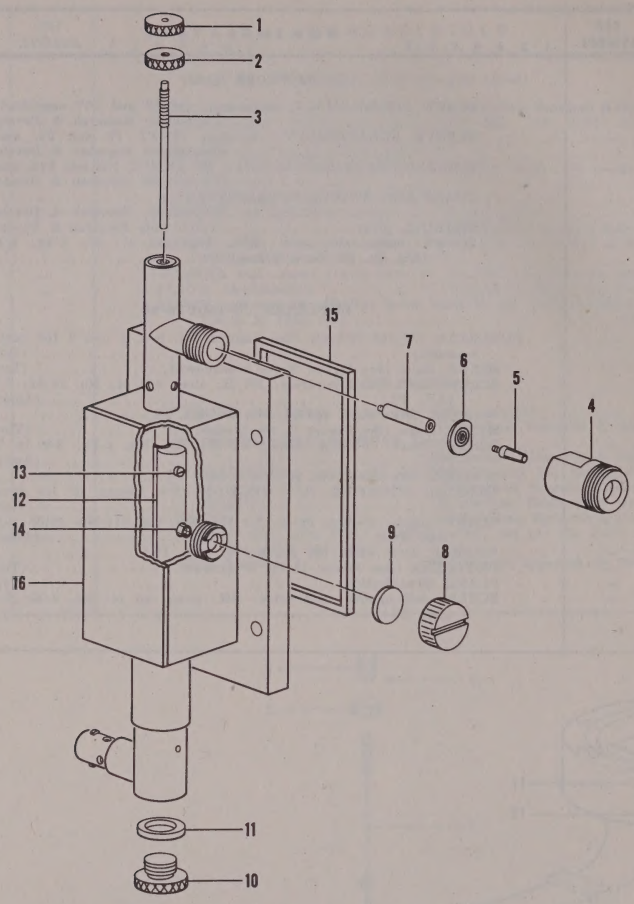

Figure 10. Stage Mixer

FIG. & INDEX NO.	PART NUMBER	REF SYMBOL	NOMENCLATURE (1 2 3 4 5 6 7)	UNITS PER ASSY	APPLI-CATION
			STAGE MIXER		
10–	B1056–156	—	. . STAGE MIXER (See Figures 9–1 and 14–1 for next higher assembly) ....(Terpening)	Ref	
–1	C12534B	—	. . . KNOB ....(NDRC)	1	
–2	C12534C	—	. . . NUT, lock ....(NDRC)	1	
–3	A1056–1038	—	. . . PLUNGER ....(Terpening)	1	
–4	C2587J	—	. . . SHELL, connector ....(NDRC)	1	
–5	C2587AI	—	. . . CONTACT, connector ....(NDRC)	1	
–6	C2587AJ	—	. . . RESISTOR, fixed ....(NDRC)	1	
–7	C1254I	—	. . . CONNECTOR, adapter ....(NDRC)	1	
–8	A821–37	—	. . . CAP ....(Terpening)	1	
–9	A822–18	—	. . . PACKING ....(Terpening)	1	
–10	A1056–34	—	. . . SCREW, thumb ....(Terpening)	1	
–11	A1056–1022	—	. . . GASKET ....(Terpening)	1	
–12	A1056–70	—	. . . TRANSFORMER, RF ....(Terpening)	1	
–13	Coml	—	. . . SCREW, mach: slot drive; Fil H; SS; No. 1–76; 5/16 in lg (Att. Pt.) ....(Amer Screw)	2	
–14	A1056–1035	—	. . . CONTACT, crystal ....(Terpening)	1	
–15	MT211–1	—	. . . GASKET ....(Metal Textile)	1	
–16	No Number	—	. . . WAVE GUIDE SECTION (B1056–156P4, P5, P8, P9, P17, P18, P20, P22, P23 and P24, assembled) ....(Terpening)	1	

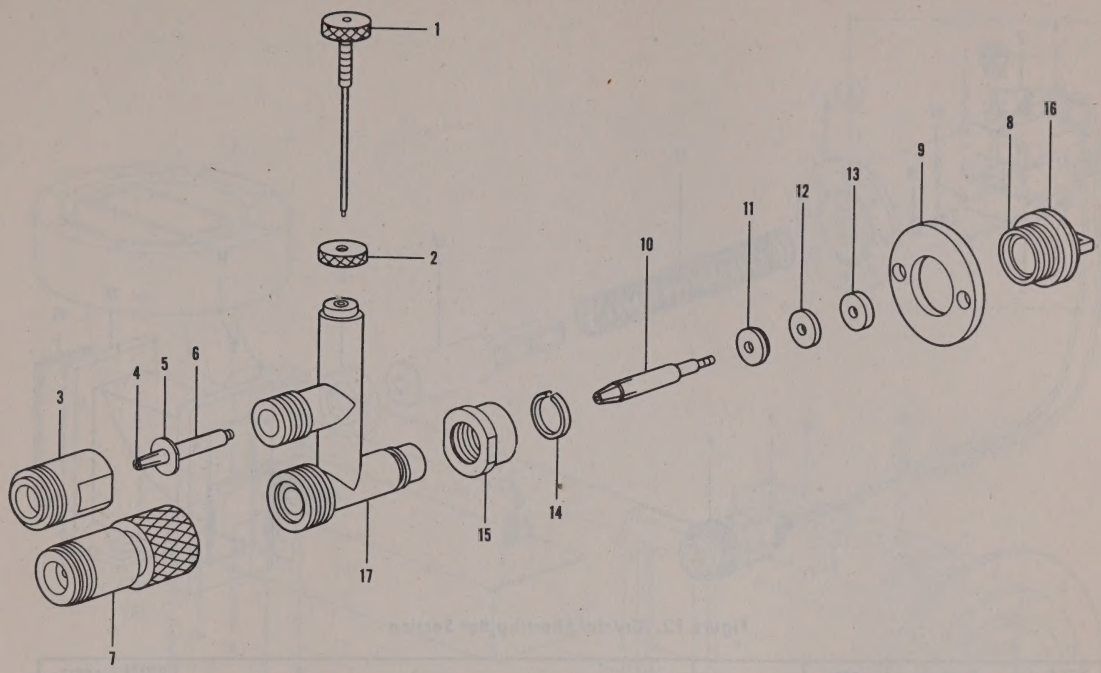

Figure 11. Stage Mixer

FIG. & INDEX NO.	PART NUMBER	REF SYMBOL	1 2 3 4 5 6 7 NOMENCLATURE	UNITS PER ASSY	APPLI-CATION
			STAGE MIXER		
11–	B1056–190	—	. . STAGE MIXER (See Figures 9–4 and 14–7 for next higher assembly) ..... (Terpening)	Ref	
–1	No Number	—	. . . PLUNGER SUBASSEMBLY (B1056–190P5 and P7 assembled) . (Terpening)	1	
–2	C12534C	—	. . . NUT, lock ..... (NDRC)	1	
–3	C2587J	—	. . . SHELL, connector ..... (NDRC)	1	
–4	C2587AI	—	. . . CONTACT, connector ..... (NDRC)	1	
–5	C2587AJ	—	. . . RESISTOR, fixed ..... (NDRC)	1	
–6	C12534I	—	. . . CONNECTOR, adapter ..... (NDRC)	1	
–7	No Number	—	. . . CONNECTOR, receptacle (B1056–190P20, P21, P23, P24, P25, P26, P27 and P29, assembled) ..... (Terpening)	1	
–8	No Number	—	. . . HOLDER, loop (B1056–190P9 and P13 assembled) ..... (Terpening)	1	
–9	A1056–1007	—	. . . FLANGE, mounting ..... (Terpening)	1	
–10	C2587N	—	. . . ARM ..... (NDRC)	1	
–11	C2587AF	—	. . . INSULATOR, bead ..... (NDRC)	1	
–12	C2587AE	—	. . . GASKET ..... (NDRC)	1	
–13	C2587AG	—	. . . INSULATOR, bead ..... (NDRC)	1	
–14	A1056–48	—	. . . RING, retainer ..... (Terpening)	1	
–15	A1056–53	—	. . . FITTING, pipe ..... (Terpening)	1	
–16	A1056–46	—	. . . GASKET ..... (Terpening)	1	
–17	No Number	—	. . . WAVE GUIDE SECTION (B1056–190P4, P6, P18, P19 and P30, assembled) ..... (Terpening)	1	

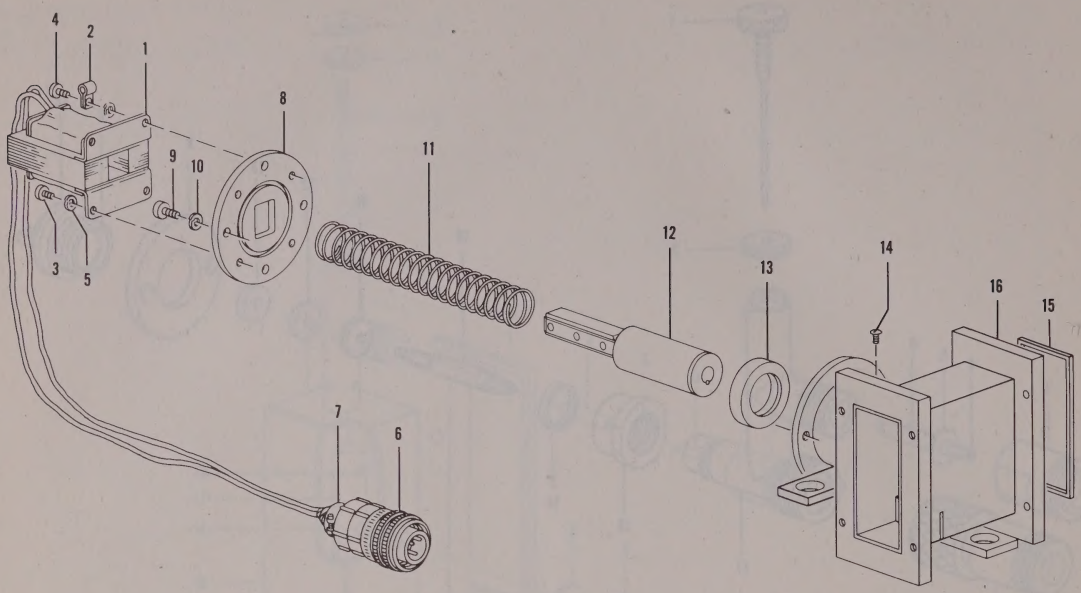

Figure 12. Crystal Shorting Bar Section

FIG. & INDEX NO.	PART NUMBER	REF SYMBOL	NOMENCLATURE (1 2 3 4 5 6 7)	UNITS PER ASSY	APPLI-CATION
			CRYSTAL SHORTING BAR SECTION		
12–	C1056–180	—	. . CRYSTAL SHORTING BAR SECTION (See Figure 9–7 for next higher assembly) ..... (Terpening)	Ref	
–1	A1056–1051	—	. . . SOLENOID ..... (Terpening)	1	
–2	HP755–2	—	. . . CLAMP ..... (Burndy)	1	
–3	Coml	—	. . . SCREW, mach: Phillips drive; Fil H; steel, cad pl; No. 8–32; 1/4 in lg (Att. Pt.) ..... (Amer Screw)	3	
–4	Coml	—	. . . SCREW, mach: Phillips drive; Fil H; steel, cad pl; No. 8–32; 5/16 in lg (Att. Pt. for items 1 and 2) ..... (Amer Screw)	1	
–5	AN935–8	—	. . . WASHER, lock: steel, cad pl; No. 8 (Att. Pt. for items 1 and 2)	4	
–6	AN3106–16–10P	—	. . . CONNECTOR, plug	1	
–7	AN3057–8	—	. . . CLAMP	1	
–8	A1056–1047	—	. . . DISK, mounting ..... (Terpening)	1	
–9	Coml	—	. . . SCREW, mach: Phillips drive; Fil H; steel, cad pl; No. 10–32; 7/16 in lg (Att. Pt.) ..... (Amer Screw)	4	
–10	AN935–10	—	. . . WASHER, lock: steel, cad pl; No. 10 (Att. Pt.)	4	
–11	A1056–79	—	. . . SPRING ..... (Terpening)	1	
–12	No Number	—	. . . ARMATURE SUBASSEMBLY, solenoid (C1056–180P, P9 and P18, assembled) ..... (Terpening)	1	
–13	A1056–68	—	. . . BEARING, sleeve ..... (Terpening)	1	
–14	Coml	—	. . . SCREW, self-tapping: slot drive; RH; steel, cad pl; No. 6–32; 1/4 in lg (Att. Pt.) ..... (Parker-Kalon)	3	
–15	MT211–1	—	. . . GASKET ..... (Metal Textile)	1	
–16	C1056–179	—	. . . WAVE GUIDE SECTION ..... (Terpening)	1	
			DUPLEXER		
13–	D1056–170	—	. . DUPLEXER (See Figures 9–10 and 14–10 for next higher assembly) ..... (Terpening)	Ref	
–1	A1056–24	—	. . . BRACKET ..... (Terpening)	1	
–2	Coml	—	. . . SCREW, mach: Phillips drive; Fil H; steel, cad pl; No. 8–32; 3/8 in lg (Att. Pt.) ..... (Amer Screw)	2	
–3	AN960–8L	—	. . . WASHER, flat: steel, cad pl; No. 8 (Att. Pt.)	2	
–4	AN935–8	—	. . . WASHER, lock: steel, cad pl; No. 8 (Att. Pt.)	2	
–5	A1056–8	—	. . . RESISTOR, fixed ..... (Terpening)	1	

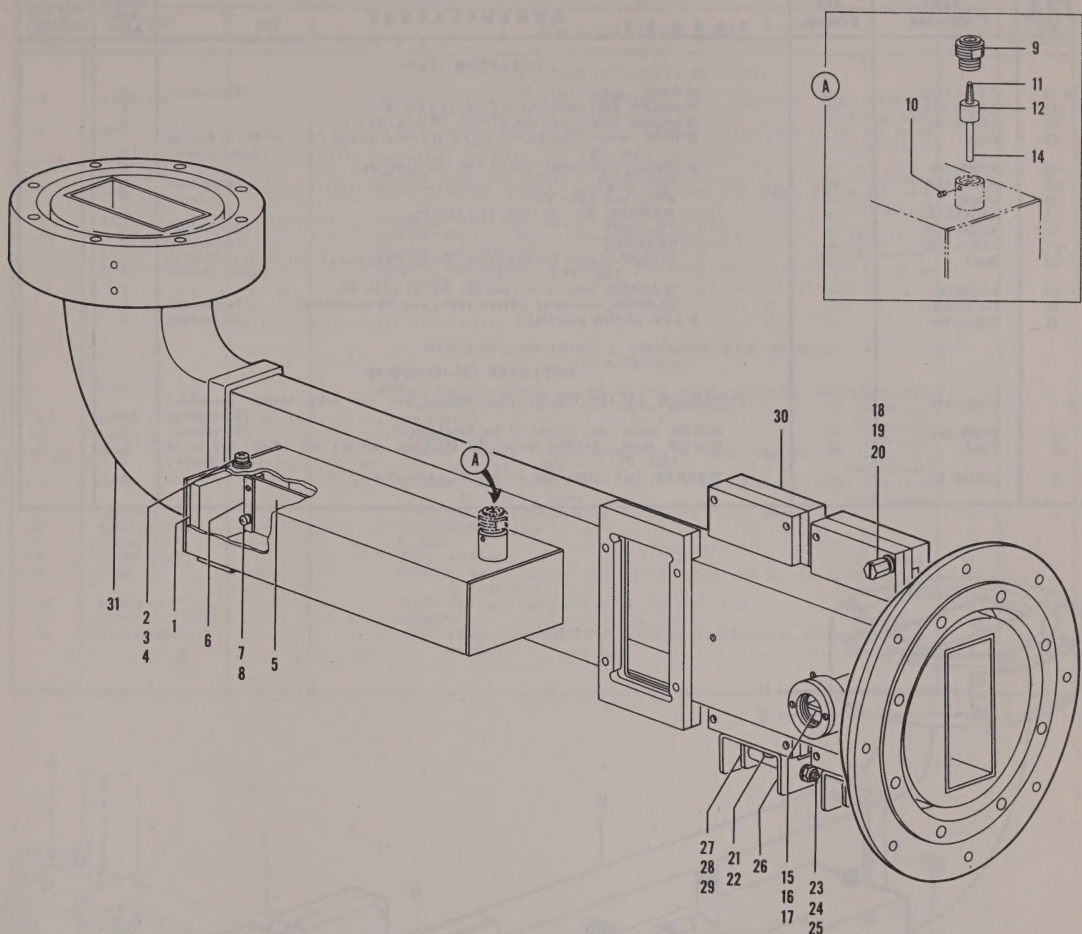

Figure 13. Duplexer

FIG. & INDEX NO.	PART NUMBER	REF SYMBOL	NOMENCLATURE 1 2 3 4 5 6 7	UNITS PER ASSY	APPLI-CATION
			DUPLEXER (Cont)		
13–6	A1056–1043	—	. . . STRIP, batten .....(Terpening)	1	
–7	Coml	—	. . . SCREW, mach: Phillips drive; Fil H; steel, cad pl; No. 4–40; 3/8 in lg (Att. Pt. for items 5 and 6) .....(Amer Screw)	2	
–8	AN935–4	—	. . . WASHER, lock: steel, cad pl; No. 4 (Att. Pt. for items 5 and 6).....	2	
–9	A1056–31	—	. . . CONNECTOR, receptacle .....(Terpening)	1	
–10	Coml	—	. . . SCREW, set: Bristo four-spline drive; headless; SS; No. 4–40; 1/8 in lg (Att. Pt.) .....(Bristolco)	1	
	A1056–110	—	. . . PROBE, RF .....(Terpening)	1	
–11	A1034–1	—	. . . . CONTACT, connector .....(Terpening)	1	
–12	A1056–1078	—	. . . . INSULATOR, ring .....(Terpening)	1	
✦					
–14	A1056–5	—	. . . . PROBE, RF .....(Terpening)	1	
–15	A1056–1005	—	. . . RESISTOR, fixed .....(Terpening)	1	
–16	Coml	—	. . . SCREW, mach: Phillips drive; Fil H; steel, cad pl; No. 6–32; 3/16 in lg (Att. Pt.) .....(Amer Screw)	1	
–17	AN935–6	—	. . . WASHER, lock: steel, cad pl; No. 6 (Att. Pt.).....	1	
	B1056–194	—	. . . CLAMP SUBASSEMBLY .....(Terpening)	2	

FIG. & INDEX NO.	PART NUMBER	REF SYMBOL	1 2 3 4 5 6 7 NOMENCLATURE	UNITS PER ASSY	APPLI-CATION
			DUPLEXER (Cont)		
13–18	A1056–1012	—	. . . SCREW, captive (Att. Pt.) .....(Terpening)	4	
–19	AN960–10L	—	. . . WASHER, flat: steel, cad pl; No. 10 (Att. Pt.)	4	
–20	AN935–10	—	. . . WASHER, lock: steel, cad pl; No. 10 (Att. Pt.)	4	
–21	Coml	—	. . . SCREW, mach: Phillips drive; Fil H; steel, cad pl; No. 10–32; 1/2 in lg (Att. Pt.) .....(Amer Screw)	2	
–22	AN935–10	—	. . . WASHER, lock: steel, cad pl; No. 10 (Att. Pt.)	2	
–23	A1056–1059	—	. . . . PIN, hinge .....(Terpening)	1	
–24	22M02	—	. . . . NUT, lock (Att. Pt.) .....(Esna)	2	
–25	AN960C10L	—	. . . . WASHER, flat: SS; No. 10 (Att. Pt.)	2	
–26	A1056–1060	—	. . . . BRACKET .....(Terpening)	1	
–27	A1056–1058	—	. . . . BRACKET .....(Terpening)	1	
–28	Coml	—	. . . . SCREW, mach: Phillips drive; Fil H; steel, cad pl; No. 10–32; 1/2 in lg (Att. Pt.) .....(Amer Screw)	2	
–29	AN935–10	—	. . . . WASHER, lock: steel, cad pl; No. 10 (Att. Pt.).....	2	
–30	No Number	—	. . . . FLANGE, mounting (B1056–194P1 and P8 assembled).....(Terpening)	1	
–31	D1056–169	—	. . . WAVE GUIDE SECTION .....(Terpening)	1	
			DUPLEXER CU–192/CPS–6B		
14–	D1056–135	—	. DUPLEXER CU–192/CPS–6B (See Figure 4–4 for next higher assembly) .....(Terpening)	Ref	
–1	B1056–156	—	. . MIXER, stage (See Figure 10 for breakdown).....(Terpening)	1	
–2	Coml	—	. . SCREW, mach: Phillips drive; Fil H; steel, cad pl; No. 10–32; 7/8 in lg (Att. Pt.) .....(Amer Screw)	4	
–3	AN935–10	—	. . WASHER, lock: steel, cad pl; No. 10 (Att. Pt.).....	4	

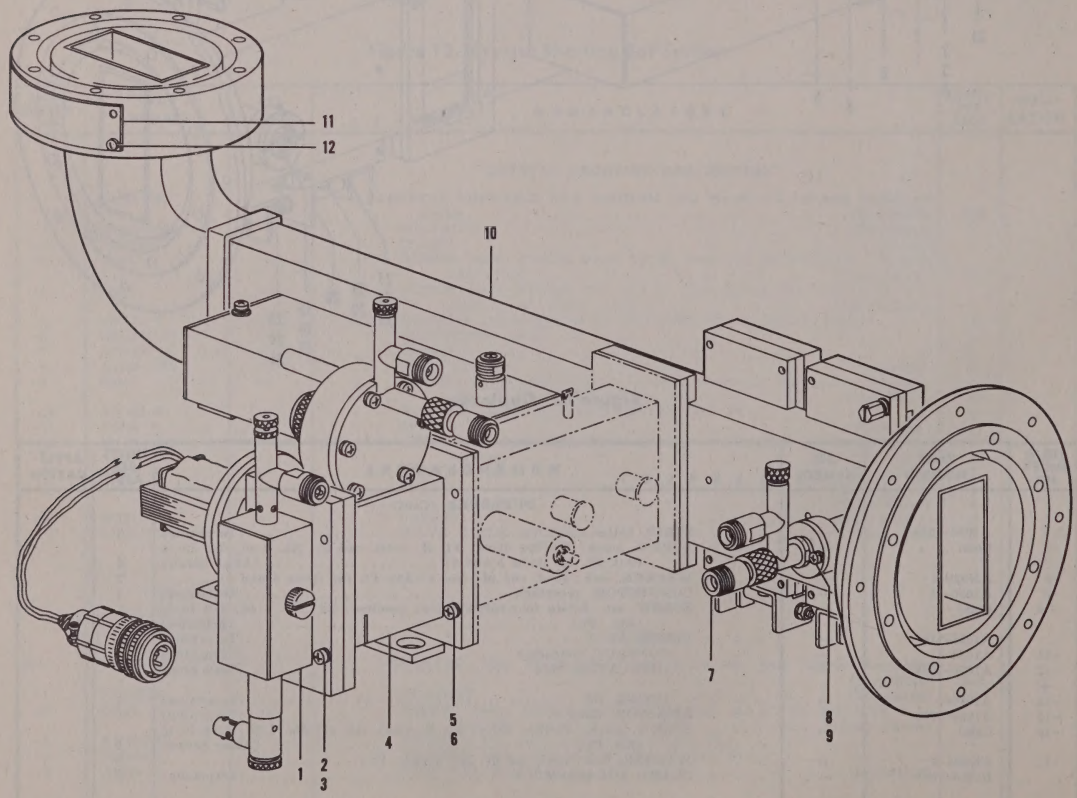

Figure 14. Duplexer CU–192/CPS–6B

FIG. & INDEX NO.	PART NUMBER	REF SYMBOL	NOMENCLATURE 1 2 3 4 5 6 7	UNITS PER ASSY	APPLI-CATION
			DUPLEXER CU–192/CPS–6B (Cont)		
14–4	C1056–189	—	. . MIXER-FILTER-CRYSTAL SHORTING BAR SECTION SUBASSEMBLY (See Figure 15 for breakdown).....(Terpening)	1	
–5	Coml	—	. . SCREW, mach: Phillips drive; Fil H; steel, cad pl; No. 10–32; 5/8 in lg (Att. Pt.) .....(Amer Screw)	4	
–6	AN935–10	—	. . WASHER, lock: steel, cad pl; No. 10 (Att. Pt.).....	4	
–7	B1056–190	—	. . MIXER, stage (See Figure 11 for breakdown).....(Terpening)	1	
–8	Coml	—	. . SCREW, mach: Phillips drive; Fil H; SS; No. 8–32; 3/8 in lg (Att. Pt.) .....(Amer Screw)	2	
–9	AN935–8L	—	. . WASHER, lock: steel, cad pl; No. 8 (Att. Pt.).....	2	
–10	D1056–170	—	. . DUPLEXER (See Figure 13 for breakdown).....(Terpening)	1	
–11	A1056–1071	—	. . PLATE, identification .....(Terpening)	1	
–12	AN504–4–4	—	. . SCREW, self-tapping: slot drive; RH; steel, cad pl; No. 4–40; 1/4 in lg (Att. Pt.)	4	
			MIXER-FILTER-CRYSTAL SHORTING BAR SECTION SUBASSEMBLY		
15–	C1056–189	—	. . MIXER-FILTER-CRYSTAL SHORTING BAR SECTION SUBASSEMBLY (See Figure 14–4 for next higher assembly).....(Terpening)	Ref	
–1	A1056–1051	—	. . . SOLENOID .....(Terpening)	1	
–2	HP755–2	—	. . . CLAMP .....(Burndy)	1	
–3	Coml	—	. . . SCREW, mach: Phillips drive; Fil H; steel, cad pl; No. 8–32; 1/4 in lg (Att. Pt.).....(Amer Screw)	3	
–4	Coml	—	. . . SCREW, mach: Phillips drive; Fil H; steel, cad pl; No. 8–32; 5/16 in lg (Att. Pt. for items 1 and 2).....(Amer Screw)	1	
–5	AN935–8	—	. . . WASHER, lock: steel, cad pl; No. 8 (Att. Pt. for items 1 and 2).....	4	
–6	AN3106–16–10P	—	. . . CONNECTOR, plug	1	
–7	AN3057–8	—	. . . CLAMP	1	
–8	A1056–1047	—	. . . DISK, mounting .....(Terpening)	1	
–9	Coml	—	. . . SCREW, mach: Phillips drive; Fil H; steel, cad pl; No. 10–32; 7/16 in lg (Att. Pt.) .....(Amer Screw)	4	
–10	AN935–10	—	. . . WASHER, lock: steel, cad pl; No. 10 (Att. Pt.).....	4	
–11	A1056–79	—	. . . SPRING .....(Terpening)	1	
–12	No Number	—	. . . ARMATURE SUBASSEMBLY, solenoid (C1056–189P10, P33 and P47, assembled) .....(Terpening)	1	

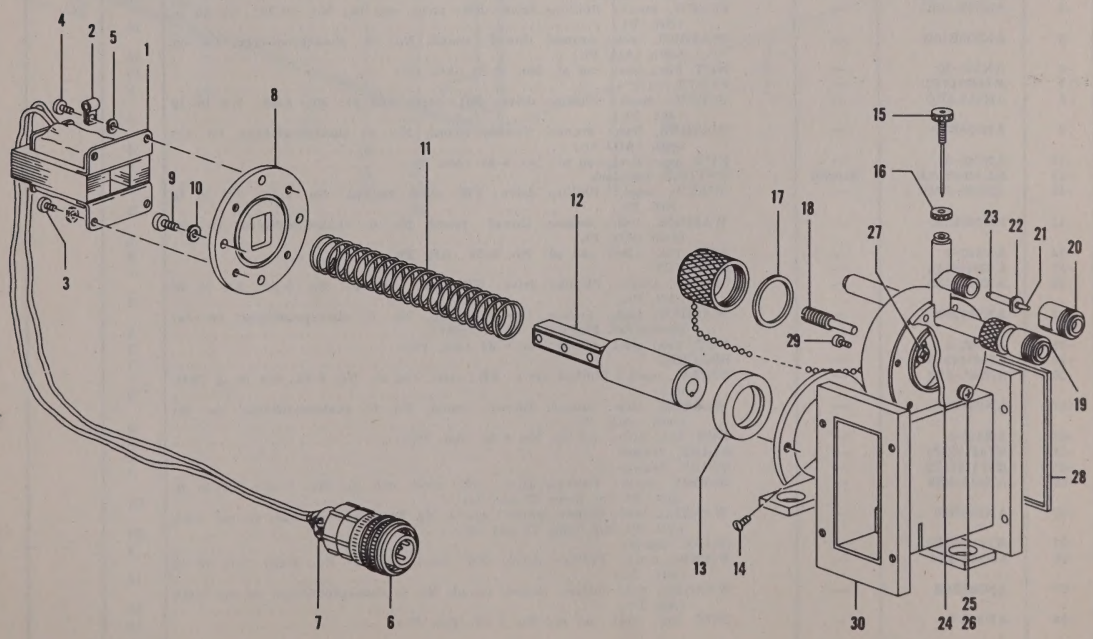

Figure 15. Mixer-Filter-Crystal Shorting Bar Section Subassembly

FIG. & INDEX NO.	PART NUMBER	REF SYMBOL	NOMENCLATURE 1 2 3 4 5 6 7	UNITS PER ASSY	APPLI-CATION
			MIXER-FILTER-CRYSTAL SHORTING BAR SECTION SUBASSEMBLY (Cont)		
15–13	A1056–68	—	. . . BEARING, sleeve (Terpening)	1	
–14	Coml	—	. . . SCREW, self-tapping: slot drive; RH; steel, cad pl; No. 6–32; 1/4 in lg (Att. Pt.) (Parker-Kalon)	8	
–15	No Number	—	. . . PLUNGER SUBASSEMBLY (C1056–189P4 and P9 assembled)	1	
–16	C12534C	—	. . . NUT, lock (NDRC)	1	
–17	A1056–1032	—	. . . GASKET (Terpening)	1	
–18	A1056–1034	—	. . . ROD, tuning (Terpening)	1	
–19	No Number	—	. . . CONNECTOR, receptacle (C1056–189P15, P19, P21, P22, P23, P24, P25 and P28, assembled) (Terpening)	1	
–20	C2587J	—	. . . SHELL, connector (NDRC)	1	
–21	C2587AI	—	. . . CONTACT, connector (NDRC)	1	
–22	C2587AJ	—	. . . RESISTOR, fixed (NDRC)	1	
–23	C12534I	—	. . . CONNECTOR, adapter (NDRC)	1	
–24	A1056–76	—	. . . COVER (Terpening)	1	
–25	Coml	—	. . . SCREW, mach: Phillips drive; Fil H; steel, cad pl; No. 8–32; 1/2 in lg (Att. Pt.) (Amer Screw)	6	
–26	AN935–8	—	. . . WASHER, lock: steel, cad pl; No. 8 (Att. Pt.)	6	
–27	XRC319	—	. . . RING, retainer (Natl Lock Washer)	1	
–28	MT211–1	—	. . . GASKET (Metal Textile)	1	
–29	Coml	—	. . . SCREW, mach: Phillips drive; Fil H; steel, cad pl; No. 6–32; 5/16 in lg (Amer Screw)	1	
–30	No Number	—	. . . WAVE GUIDE SECTION (C1056–189P1, P2, P3, P6, P8, P17 and P29, assembled) (Terpening)	1	
			BEACON RECEIVER		
16–	ML7353068G1	—	. BEACON RECEIVER (See Figure 4–8 for next higher assembly)	Ref	
–1	ML7353923G1	—	. . RADAR RECEIVER R–309/CPS–6B (See Figure 17 for breakdown)	1	
–2	No Number	—	. . CABINET (W7353068P9 and P19 assembled)	1	
–3	ML7770798G1	—	. . SUPPORT, housing	2	
–4	AN520–10R8	—	. . SCREW, mach: Phillips drive; RH; steel, cad pl; No. 10–32; 1/2 in lg (Att. Pt.)	10	
–5	AN936B10B	—	. . WASHER, lock: bronze, tinned; round, No. 10; shakeproof-type, tw ext teeth (Att. Pt.)	10	
–6	AN345–10	—	. . NUT, hex: steel, cad pl; No. 10–32 (Att. Pt.)	10	
–7	M7481967P1	—	. . PLATE, back	2	
–8	AN515–8R6	—	. . SCREW, mach: Phillips drive; RH; steel, cad pl; No. 8–32; 3/8 in lg (Att. Pt.)	6	
–9	AN936B8B	—	. . WASHER, lock: bronze, tinned; round, No. 8; shakeproof-type, tw ext teeth (Att. Pt.)	6	
–10	AN340–8	—	. . NUT, hex: steel, cad pl; No. 8–32 (Att. Pt.)	6	
–11	ML7460330G5	S1005B	. . SWITCH, interlock	1	
–12	AN505–6R10	—	. . SCREW, mach: Phillips drive; FH; steel, cad pl; No. 6–32; 5/8 in lg (Att. Pt.)	2	
–13	AN936B6B	—	. . WASHER, lock: bronze, tinned; round, No. 6; shakeproof-type, tw ext teeth (Att. Pt.)	2	
–14	AN340–6	—	. . NUT, hex: steel, cad pl; No. 6–32 (Att. Pt.)	2	
–15	K7001526P1	—	. . BRACKET	1	
–16	AN505–6R6	—	. . SCREW, mach: Phillips drive; FH; steel, cad pl; No. 6–32; 3/8 in lg (Att. Pt.)	2	
–17	AN936B6B	—	. . WASHER, lock: bronze, tinned; round, No. 6; shakeproof-type, tw ext teeth (Att. Pt.)	2	
–18	AN340–6	—	. . NUT, hex: steel, cad pl; No. 6–32 (Att. Pt.)	2	
–19	K7001525P1	—	. . BRACKET	1	
–20	AN505–6R6	—	. . SCREW, mach: Phillips drive; FH; steel, cad pl; No. 6–32; 3/8 in lg (Att. Pt.)	2	
–21	AN936B6B	—	. . WASHER, lock: bronze, tinned; round, No. 6; shakeproof-type, tw ext teeth (Att. Pt.)	2	
–22	AN340–6	—	. . NUT, hex: steel, cad pl; No. 6–32 (Att. Pt.)	2	
–23	M7481972P1	—	. . GUIDE, drawer	2	
–24	M7481972P2	—	. . GUIDE, drawer	4	
–25	AN515–8R8	—	. . SCREW, mach: Phillips drive; RH; steel, cad pl; No. 8–32; 1/2 in lg (Att. Pt. for items 23 and 24)	20	
–26	AN936B8B	—	. . WASHER, lock: bronze, tinned; round, No. 8; shakeproof-type, tw ext teeth (Att. Pt. for items 23 and 24)	20	
–27	M7481973P1	—	. . SLIDE, drawer	2	
–28	AN505–6R7	—	. . SCREW, mach: Phillips drive; FH; steel, cad pl; No. 6–32; 7/16 in lg (Att. Pt.)	10	
–29	AN936B6B	—	. . WASHER, lock: bronze, tinned; round, No. 6; shakeproof-type, tw ext teeth (Att. Pt.)	10	
–30	AN340–6	—	. . NUT, hex: steel, cad pl; No. 6–32 (Att. Pt.)	10	

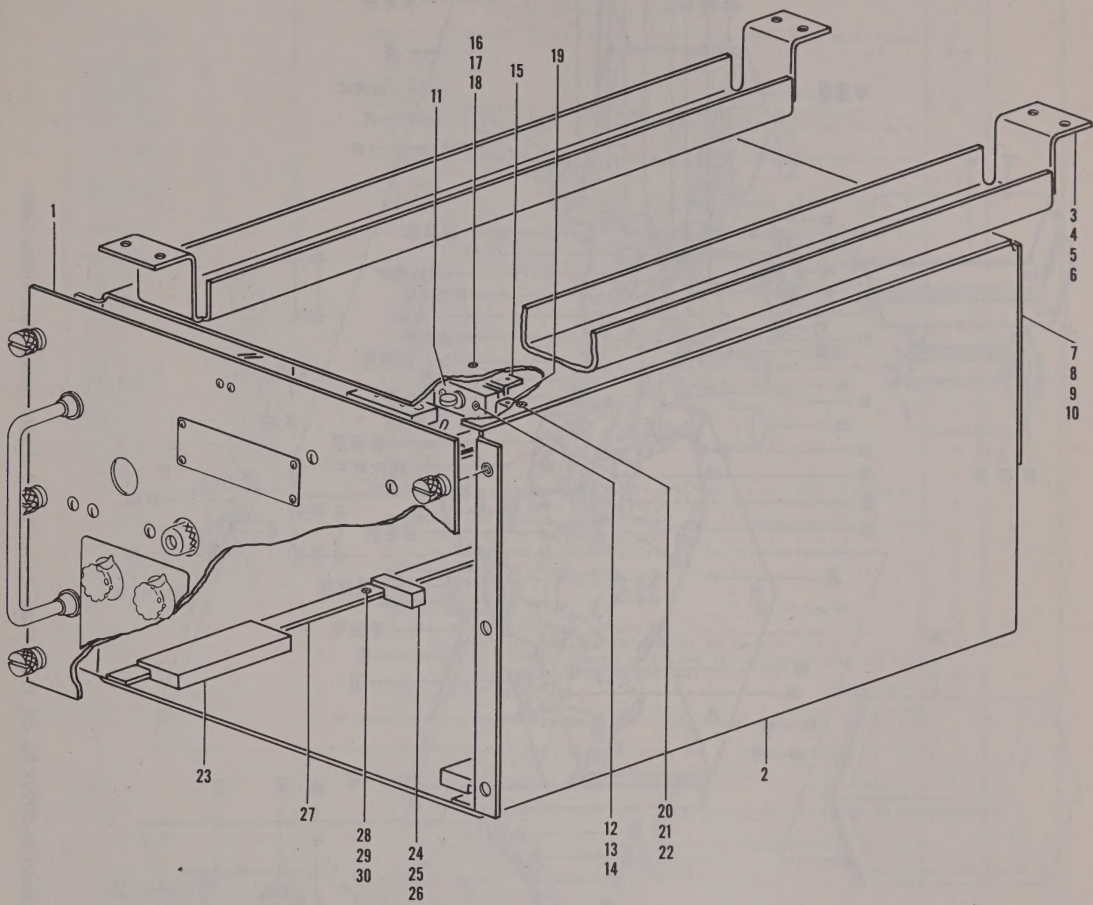

Figure 16. Beacon Receiver

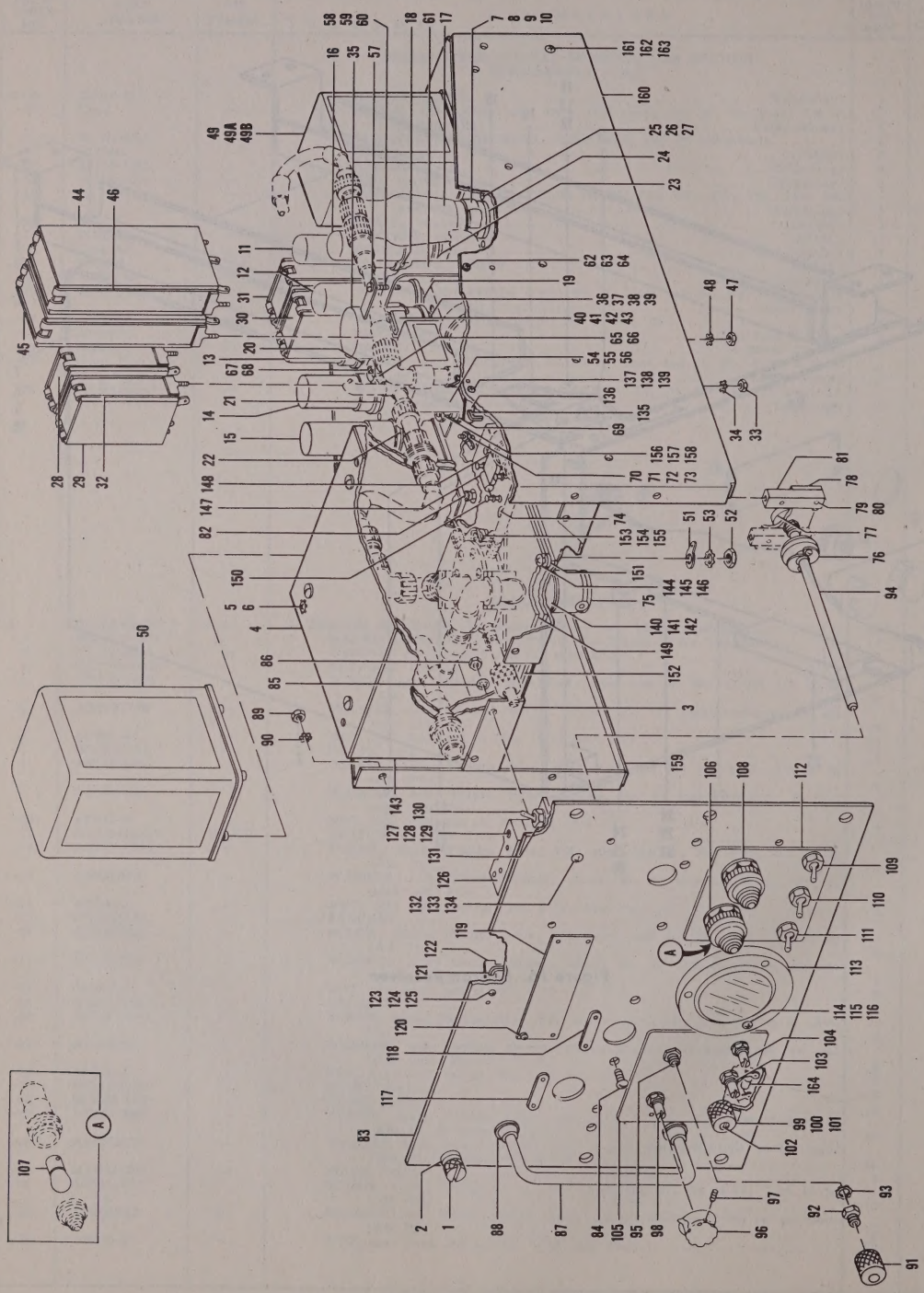

Figure 17. Radar Receiver R–309/CPS–6B, Front View (Sheet 1 of 4 sheets, Index Nos. 1 thru 164)

FIG. & INDEX NO.	PART NUMBER	REF SYMBOL	NOMENCLATURE 1 2 3 4 5 6 7	UNITS PER ASSY	APPLI-CATION
			RADAR RECEIVER R–309/CPS–6B		
17–	ML7353923G1	—	. . RADAR RECEIVER R–309/CPS–6B (See Figure 16–1 for next higher assembly)	Ref	
–1	K7126123P1	—	. . . SCREW, captive	6	
–2	K7128235P2	—	. . . BUSHING	6	
–3	T7664889P1	—	. . . CHASSIS	1	
–4	ML7771847G1	—	. . . COVER-RESISTOR SUBASSEMBLY (See Figure 18 for breakdown)	1	
–5	AN515–8R6	—	. . . SCREW, mach: Phillips drive; RH; steel, cad pl; No. 8–32; 3/8 in lg (Att. Pt.)	4	
–6	AN936B8B	—	. . . WASHER, lock: bronze, tinned; round, No. 8; shakeproof-type, tw ext teeth (Att. Pt.)	4	
–7	M7476737P1	—	. . . CLAMP	1	
–8	AN520–10–6	—	. . . SCREW, mach: slot drive; RH; steel, cad pl; No. 10–32; 3/8 in lg (Att. Pt.)	1	
–9	AN936B10	—	. . . WASHER, lock: steel, cad pl; round, No. 10; shakeproof-type, tw ext teeth (Att. Pt.)	1	
–10	AN345–10	—	. . . NUT, hex: steel, cad pl; No. 10–32 (Att. Pt.)	1	
–11	6X5GT	V1001	. . . TUBE, electron	1	
–12	6SN7W	V1002	. . . TUBE, electron	1	
–13	6AC7W	V1003	. . . TUBE, electron	1	
–14	6AC7W	V1004	. . . TUBE, electron	1	
–15	6AG7	V1005	. . . TUBE, electron	1	
–16	6A5GT	V1007	. . . TUBE, electron	1	
–17	OD3/VR150	V1008	. . . TUBE, electron	1	
–18	TSB8T101	XV1001	. . . SOCKET, tube	1	
–19	TSB8T101	XV1002	. . . SOCKET, tube	1	
–20	TSB8T101	XV1003	. . . SOCKET, tube	1	
–21	TSB8T101	XV1004	. . . SOCKET, tube	1	
–22	TSB8T101	XV1005	. . . SOCKET, tube	1	
–23	TSB8T101	XV1007	. . . SOCKET, tube	1	
–24	TSB8T101	XV1008	. . . SOCKET, tube	1	
–25	AN515–6R5	—	. . . SCREW, mach: Phillips drive; RH; steel, cad pl; No. 6–32; 5/16 in lg (Att. Pt. for items 18 thru 24)	14	
–26	AN936B6B	—	. . . WASHER, lock: bronze, tinned; round, No. 6; shakeproof-type, tw ext teeth (Att. Pt. for items 18 thru 24)	14	
–27	AN340–6	—	. . . NUT, hex: steel, cad pl; No. 6–32 (Att. Pt. for items 18 thru 24)	14	
–28	CP70B1FF105K	C1007	. . . CAPACITOR, fixed	1	
–29	CP70B1FF105K	C1010	. . . CAPACITOR, fixed	1	
–30	CP70B1FF105K	C1012	. . . CAPACITOR, fixed	1	
–31	CP70B1FF105K	C1005	. . . CAPACITOR, fixed	1	
–32	CP07SA3	—	. . . CLAMP (Att. Pt. for items 28 thru 31)	8	
–33	AN345–10	—	. . . NUT, hex: steel, cad pl; No. 10–32 (Att. Pt. for items 28 thru 31)	8	
–34	AN936B10B	—	. . . WASHER, lock: bronze, tinned; round, No. 10; shakeproof-type, tw ext teeth (Att. Pt. for items 28 thru 31)	8	
–35	SK5001	K1001	. . . RELAY, armature (Clare CP)	1	
–36	TSB8T101	XK1001	. . . SOCKET, tube	1	
–37	AN515–6R5	—	. . . SCREW, mach: Phillips drive; RH; steel, cad pl; No. 6–32; 5/16 in lg (Att. Pt.)	2	
–38	AN936B6B	—	. . . WASHER, lock: bronze, tinned; round, No. 6; shakeproof-type, tw ext teeth (Att. Pt.)	2	
–39	AN340–6	—	. . . NUT, hex: steel, cad pl; No. 6–32 (Att. Pt.)	2	
–40	926P	—	. . . CLAMP (Birtcher)	2	
–41	AN515–8R6	—	. . . SCREW, mach: Phillips drive; RH; steel, cad pl; No. 8–32; 3/8 in lg (Att. Pt.)	1	
–42	AN936B8B	—	. . . WASHER, lock: bronze, tinned; round, No. 8; shakeproof-type, tw ext teeth (Att. Pt.)	1	
–43	AN340–8	—	. . . NUT, hex: steel, cad pl; No. 8–32 (Att. Pt.)	1	
–44	CP70B1FG405K	C1017	. . . CAPACITOR, fixed	1	
–45	CP70B1FG405K	C1016	. . . CAPACITOR, fixed	1	
–46	CP07SB6	—	. . . CLAMP (Att. Pt. for items 44 and 45)	4	
–47	AN345–10	—	. . . NUT, hex: steel, cad pl; No. 10–32 (Att. Pt. for items 44 and 45)	4	
–48	AN936B10B	—	. . . WASHER, lock: bronze, tinned; round, No. 10; shakeproof-type, tw ext teeth (Att. Pt. for items 44 and 45)	4	
–49	7482717	T1002	. . . TRANSFORMER, power (GE)	1	
–49A	AN340–6	—	. . . NUT, hex: steel, cad pl; No. 6–32 (Att. Pt.)	4	
–49B	AN936B6B	—	. . . WASHER, lock: bronze, tinned; round, No. 6; shakeproof-type, tw ext teeth (Att. Pt.)	4	
–50	7480465	—	. . . TRANSFORMER, power (GE)	1	
–51	K7114380P1	—	. . . TERMINAL, lug	1	
–52	AN340–8	—	. . . NUT, hex: steel, cad pl; No. 8–32 (Att. Pt. for items 50 and 51)	4	
–53	AN936B8B	—	. . . WASHER, lock: bronze, tinned; round, No. 8; shakeproof-type, tw ext teeth (Att. Pt. for items 50 and 51)	4	
–54	7482715	L1001	. . . REACTOR (GE)	1	
–55	AN340–6	—	. . . NUT, hex: steel, cad pl; No. 6–32 (Att. Pt.)	4	
–56	AN936B6B	—	. . . WASHER, lock: bronze, tinned; round, No. 6; shakeproof-type, tw ext teeth (Att. Pt.)	4	
–57	K7129218P1	—	. . . PLATE, retainer	1	
–58	AN515–6R14	—	. . . SCREW, mach: Phillips drive; RH; steel, cad pl; No. 6–32; 7/8 in lg (Att. Pt.)	2	
–59	AN936B6B	—	. . . WASHER, lock: bronze, tinned; round, No. 6; shakeproof-type, tw ext teeth (Att. Pt.)	2	
–60	AN340–6	—	. . . NUT, hex: steel, cad pl; No. 6–32 (Att. Pt.)	2	
–61	K7129217P1	—	. . . BRACKET	1	
–62	AN515–6R7	—	. . . SCREW, mach: Phillips drive; RH; steel, cad pl; No. 6–32; 7/16 in lg (Att. Pt.)	2	

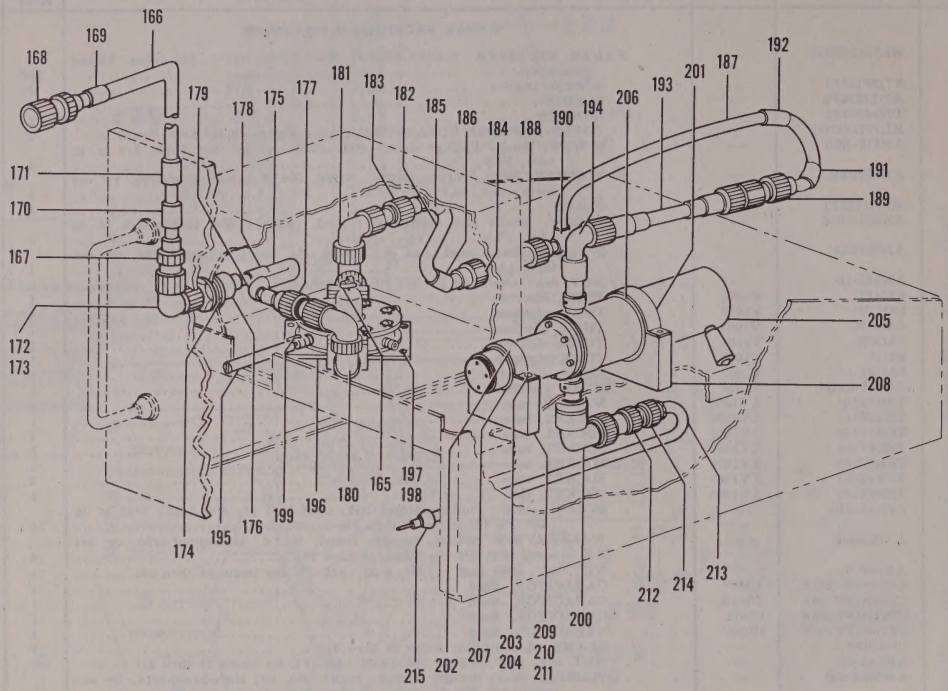

Figure 17. Radar Receiver R–309/CPS–6B, Front View (Sheet 2 of 4 sheets, Index Nos. 165 thru 215)

FIG. & INDEX NO.	PART NUMBER	REF SYMBOL	NOMENCLATURE 1 2 3 4 5 6 7	UNITS PER ASSY	APPLI-CATION
			RADAR RECEIVER R–309/CPS–6B (Cont)		
17–63	AN936B6B	—	. . . WASHER, lock: bronze, tinned; round, No. 6; shakeproof-type, tw ext teeth (Att. Pt.)	2	
–64	AN340–6	—	. . . NUT, hex: steel, cad pl; No. 6–32 (Att. Pt.)	2	
–65	M7481469P1	—	. . . NUT, lock (Att. Pt.)	1	
–66	10061	—	. . . COLLET (Millen)	1	
–67	P7768146P30	R1020	. . . RESISTOR, variable	1	
–68	AN936A616B	—	. . . WASHER, lock: bronze, tinned; round, 3/8 in; shakeproof-type, tw int teeth (Att. Pt.)	1	
–69	CP65B1FF254K	C1004	. . . CAPACITOR, fixed	1	
–70	K7878455P1	—	. . . TERMINAL, lug	1	
–71	AN515–6R5	—	. . . SCREW, mach: Phillips drive; RH; steel, cad pl; No. 6–32; 5/16 in lg (Att. Pt. for items 69 and 70)	2	
–72	AN936B6B	—	. . . WASHER, lock: bronze, tinned; round, No. 6; shakeproof-type, tw ext teeth (Att. Pt. for items 69 and 70)	2	
–73	AN340–6	—	. . . NUT, hex: steel, cad pl; No. 6–32 (Att. Pt. for items 69 and 70)	2	
–74	M2R53P12	—	. . . GROMMET	3	
–75	K7113396P1	XV1006	. . . SOCKET, tube	1	
–76	ML7463687G1	—	. . . COUPLING, flexible	1	
–77	P7768146P5	R1027	. . . RESISTOR, variable	1	
–78	K7001105P1	—	. . . MOUNTING, resistor	1	
–79	AN515–8R6	—	. . . SCREW, mach: Phillips drive; RH; steel, cad pl; No. 8–32; 3/8 in lg (Att. Pt.)	4	

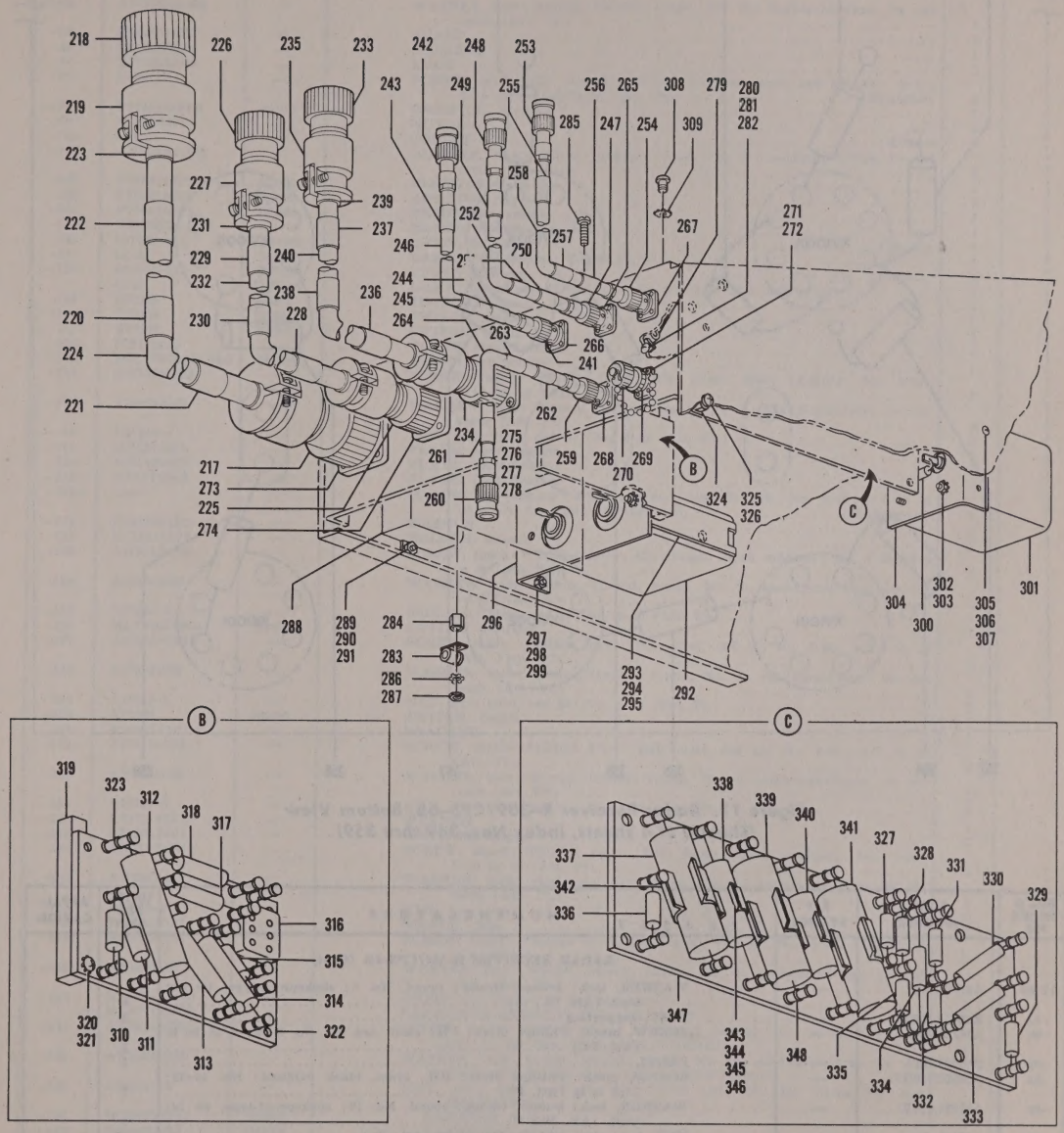

Figure 17. Radar Receiver R–309/CPS–6B, Partial Bottom-Rear View (Sheet 3 of 4 sheets, Index Nos. 217 thru 348)

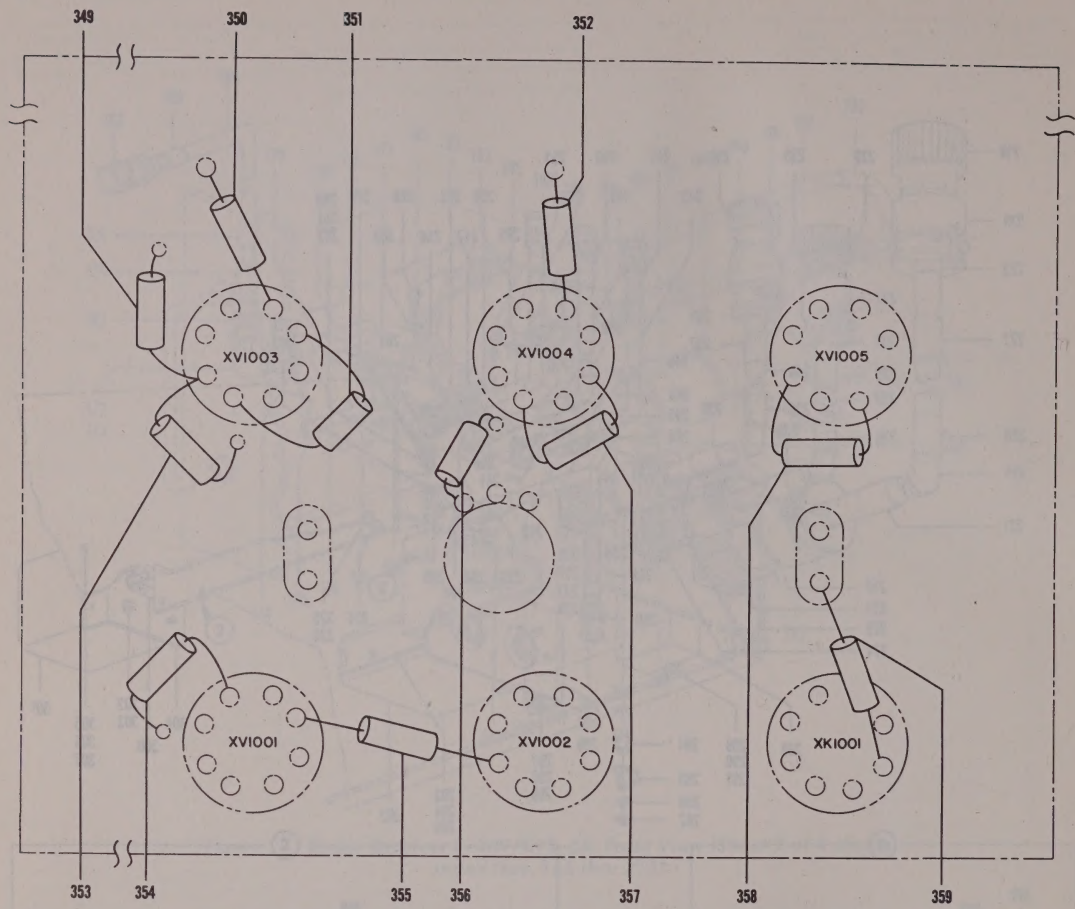

Figure 17. Radar Receiver R–309/CPS–6B, Bottom View (Sheet 4 of 4 sheets, Index Nos. 349 thru 359)

FIG. & INDEX NO.	PART NUMBER	REF SYMBOL	1 2 3 4 5 6 7 NOMENCLATURE	UNITS PER ASSY	APPLI-CATION
			RADAR RECEIVER R–309/CPS–6B (Cont)		
17–80	AN936B8B	—	. . . WASHER, lock: bronze, tinned; round, No. 8; shakeproof-type, tw ext teeth (Att. Pt.)	4	
–81	K7001104P1	—	. . . POST, supporting	2	
–82	AN505–8R5	—	. . . SCREW, mach: Phillips drive; FH; steel, cad pl; No. 8–32; 5/16 in lg (Att. Pt.)	2	
–83	P7770781P1	—	. . . PANEL	1	
–84	AN520B10R7	—	. . . SCREW, mach: Phillips drive; RH; brass, black oxidized; No. 10–32; 7/16 in lg (Att. Pt.)	7	
–85	AN936A10B	—	. . . WASHER, lock: bronze, tinned; round, No. 10; shakeproof-type, tw int teeth (Att. Pt.)	7	
–86	AN345–10	—	. . . NUT, hex: steel, cad pl; No. 10–32 (Att. Pt.)	7	
–87	K7126122P5	—	. . . HANDLE	2	
–88	K7886371P2	—	. . . WASHER, extruded	4	
–89	AN345–10	—	. . . NUT, hex: steel, cad pl; No. 10–32 (Att. Pt. for items 87 and 88)	4	
–90	AN936B10B	—	. . . WASHER, lock: bronze, tinned; round, No. 10; shakeproof-type, tw ext teeth (Att. Pt. for items 87 and 88)	4	
–91	M7481469P1	—	. . . NUT, lock	1	
–92	10061	—	. . . COLLET (Millen)	1	

FIG. & INDEX NO.	PART NUMBER	REF SYMBOL	1 2 3 4 5 6 7 NOMENCLATURE	UNITS PER ASSY	APPLI-CATION
			RADAR RECEIVER R–309/CPS–6B (Cont)		
17–93	AN936A616B	—	. . . WASHER, lock: bronze, tinned; round, 3/8 in; shakeproof-type, tw ext teeth (Att. Pt.)	1	
–94	K7001110P7	—	. . . SHAFT	1	
–95	K7102063P1	—	. . . BUSHING	1	
–96	K7106459P1	—	. . . KNOB	1	
–97	Coml	—	. . . SCREW, set: Bristo six-spline drive; headless; steel, cad pl; No. 10–32; 3/16 in lg; cup point (Att. Pt.) (Bristolco)	2	
–98	P7768146P30	R1011	. . . RESISTOR, variable	1	
–99	M7481469P1	—	. . . NUT, lock	3	
–100	10061	—	. . . COLLET (Millen)	3	
–101	AN936A616B	—	. . . WASHER, lock: bronze, tinned; round, 3/8 in; shakeproof-type, tw int teeth (Att. Pt.)	3	
–102	P7768146P1	R1001	. . . RESISTOR, variable	1	
–103	P7768146P7	R1002	. . . RESISTOR, variable	1	
–104	P7768146P1	R1008	. . . RESISTOR, variable	1	
–105	NP136036	—	. . . PLATE, identification	1	
–106	801006–511	XI1002	. . . LIGHT, indicator (Dialco)	1	
–107	Coml	I1002	. . . LAMP, incandescent: Mazda 64, 6v, 4-3/8 w	1	
–108	801006–511	XI1001	. . . LIGHT, indicator (Dialco)	1	
	Coml	I1001	. . . LAMP, incandescent: Mazda 64, 6v, 4–3/8 w (Ref item 107)	1	
–109	ST22N	S1002	. . . SWITCH, toggle	1	
–110	ST22N	S1001	. . . SWITCH, toggle	1	
–111	ST22N	S1003	. . . SWITCH, toggle	1	
–112	NP136342	—	. . . PLATE, identification	1	
–113	MR36W001DCMA	M1001	. . . METER, multimeter	1	
–114	AN515B6R5	—	. . . SCREW, mach: Phillips drive; RH; brass, black oxidized; No. 6–32; 5/16 in lg (Att. Pt.)	3	
–115	AN936A6B	—	. . . WASHER, lock: bronze, tinned; round, No. 6; shakeproof-type, tw int teeth (Att. Pt.)	3	
–116	AN340–6	—	. . . NUT, hex: steel, cad pl; No. 6–32 (Att. Pt.)	3	
–117	NP137462R	—	. . . PLATE, identification	1	
–118	NP118396N	—	. . . PLATE, identification	1	
–119	NP137556A	—	. . . PLATE, identification	1	
–120	Coml	—	. . . SCREW, self-tapping: Phillips drive; Bind H; SS; No. 4–40; 1/4 in lg (Att. Pt. for items 117 thru 119) (Shakeproof)	8	
–121	K7876451P1	—	. . . WRENCH	1	
–122	K7126174P1	—	. . . HOLDER, wrench	1	
–123	AN515B4R6	—	. . . SCREW, mach: Phillips drive; RH; brass, black oxidized; No. 4–40; 3/8 in lg (Att. Pt.)	2	
–124	AN936A4B	—	. . . WASHER, lock: bronze, tinned, round, No. 4; shakeproof-type, tw int teeth (Att. Pt.)	2	
–125	AN340–4	—	. . . NUT, hex: steel, cad pl; No. 4–40 (Att. Pt.)	2	
–126	ML7460330G2	S1005A	. . . SWITCH, interlock	1	
–127	AN515–6R18	—	. . . SCREW, mach: Phillips drive; RH; steel, cad pl; No. 6–32; 1-1/8 in lg (Att. Pt.)	2	
–128	AN936B6B	—	. . . WASHER, lock: bronze, tinned; round, No. 6; shakeproof-type, tw ext teeth (Att. Pt.)	2	
–129	AN340–6	—	. . . NUT, hex: steel, cad pl; No. 6–32 (Att. Pt.)	2	
–130	ST22N	S1006	. . . SWITCH, toggle	1	
–131	K7001527P1	—	. . . BRACKET	1	
–132	AN515–8R8	—	. . . SCREW, mach: Phillips drive; RH; steel, cad pl; No. 8–32; 1/2 in lg (Att. Pt.)	2	
–133	AN936B8B	—	. . . WASHER, lock: bronze, tinned; round, No. 8; shakeproof-type, tw ext teeth (Att. Pt.)	2	
–134	AN340–8	—	. . . NUT, hex: steel, cad pl; No. 8–32 (Att. Pt.)	2	
–135	K7871267P1	—	. . . WRENCH	1	
–136	K7126174P1	—	. . . WRENCH, holder	1	
–137	AN515B4R5	—	. . . SCREW, mach: Phillips drive; RH; brass; black oxidized; No. 4–40; 5/16 in lg (Att. Pt.)	2	
–138	AN936A4	—	. . . WASHER, lock: steel, cad pl; round, No. 4; shakeproof-type, tw int teeth (Att. Pt.)	2	
–139	AN340–4	—	. . . NUT, hex: steel, cad pl; No. 4–40 (Att. Pt.)	2	
–140	K7129120P1	—	. . . SHIELD, tube	1	
–141	AN515–4R3	—	. . . SCREW, mach: Phillips drive; RH; steel, cad pl; No. 4–40, 3/16 in lg (Att. Pt.)	4	
–142	AN936B4B	—	. . . WASHER, lock: bronze, tinned; round; No. 4; shakeproof-type, tw ext teeth (Att. Pt.)	4	
–143	ML7771846G1	—	. . . OVEN (See Figure 20 for breakdown)	1	
	ML7771838G1	—	. . . CAPACITOR-RESISTOR SUBASSEMBLY	1	
–144	AN520–10R10	—	. . . SCREW, mach: Phillips drive; RH; steel, cad pl; No. 10–32; 5/8 in lg (Att. Pt. for item 143 and ML7771838G1)	4	
–145	AN936B10B	—	. . . WASHER, lock: bronze, tinned; round, No. 10; shakeproof-type, tw ext teeth (Att. Pt. for items 143 and ML7771838G1)	4	
–146	AN345–10	—	. . . NUT, hex: steel, cad pl; No. 10–32 (Att. Pt. for items 143 and ML7771838G1)	4	
–147	RC20BF223J	R1029	. . . . RESISTOR, fixed	1	
–148	CM30D102J	C1013	. . . . CAPACITOR, fixed	1	
–149	P7771838P2	—	. . . . PANEL	1	
–150	T100–3	—	. . . . TERMINAL, stud (Bead Chain)	4	
–151	AN960–10L	—	. . . WASHER, flat: steel, cad pl; No. 10	4	
–152	P7771837P1	—	. . . PLATE, mounting	1	
–153	K7001529P1	—	. . . POST, spacing	4	
–154	AN515–6R4	—	. . . SCREW, mach: Phillips drive; RH; steel, cad pl; No. 6–32; 1/4 in lg (Att. Pt. for items 152 and 153)	4	
–155	AN936B6B	—	. . . WASHER, lock: bronze, tinned; round, No. 6; shakeproof-type, tw ext teeth (Att. Pt. for items 152 and 153)	4	

FIG. & INDEX NO.	PART NUMBER	REF SYMBOL	NOMENCLATURE 1 2 3 4 5 6 7	UNITS PER ASSY	APPLI-CATION
			RADAR RECEIVER R–309/CPS–6B (Cont)		
17–156	K7109613P3	J1006	CONNECTOR, receptacle	1	
–157	K7870535	—	NUT, hex (Att. Pt.)	1	
–158	AN936A616B	—	WASHER, lock: bronze, tinned; round; 3/8 in; shakeproof-type, tw int teeth (Att. Pt.)	1	
–159	T7666738P2	—	GUSSET	1	
–160	T7666738P1	—	GUSSET	1	
–161	AN520–10R7	—	SCREW, mach: Phillips drive; RH; steel, cad pl; No. 10–32; 7/16 in lg (Att. Pt. for items 159 and 160)	14	
–162	AN936B10B	—	WASHER, lock: bronze, tinned; round, No. 10; shakeproof-type, tw ext teeth (Att. Pt. for items 159 and 160)	14	
–163	AN345–10	—	NUT, hex: steel, cad pl; No. 10–32 (Att. Pt. for items 159 and 160)	14	
–164	RC20BF471J	R1003	RESISTOR, fixed	1	
–165	K7891988G1	—	CLIP	1	
	ML7403769G6	W1012	CABLE ASSEMBLY, RF	1	
–166	RG5/U	—	. CABLE, RF: 33 in lg	1	
–167	UG21/U	P1012	. CONNECTOR, plug	1	
–168	UG21/U	P2602	. CONNECTOR, plug	1	
–169	NP137430E	—	. MARKER, cable	1	
–170	NP137417G	—	. MARKER, cable	1	
–171	NP125726H	—	. MARKER, cable	1	
–172	UG27A/U	E1012	CONNECTOR, adapter	1	
–173	1228–2	—	WASHER, lock (Att. Pt.) (Shakeproof)	1	
–174	K7006249P1	—	WASHER, flat	1	
	ML7002866G1	W1002	CABLE ASSEMBLY, RF	1	
–175	RG8/U	—	. CABLE, RF: 6 in lg	1	
–176	UG160/U	J1012	. CONNECTOR, receptacle (Supplied with 1228–2 shakeproof lockwasher)	1	
–177	UG21/U	P1011	. CONNECTOR, plug	1	
–178	NP125726J	—	. MARKER, cable	1	
–179	NP151477A	—	. MARKER, cable	1	
–180	UG27A/U	E1010	CONNECTOR, adapter	1	
–181	UG27A/U	E1007	CONNECTOR, adapter	1	
	ML7002866G2	W1003	CABLE ASSEMBLY, RF	1	
–182	RG8/U	—	. CABLE, RF: 6 in lg	1	
–183	UG21/U	P1015	. CONNECTOR, plug	1	
–184	UG160/U	J1016	. CONNECTOR, receptacle	1	
–185	NP151477B	—	. MARKER, cable	1	
–186	NP125726K	—	. MARKER, cable	1	
	ML7403769G1	W1001	CABLE ASSEMBLY, RF	1	
–187	RG21/U	—	. CABLE, RF: 25-1/8 in lg	1	
–188	UG18/U	P1016	. CONNECTOR, plug	1	
–189	UG18/U	P1017	. CONNECTOR, plug	1	
–190	NP137417H	—	. MARKER, cable	1	
–191	NP137430C	—	. MARKER, cable	1	
–192	NP125726G	—	. MARKER, cable	1	
–193	K7128245P1	E1004	ATTENUATOR, fixed	1	
–194	UG27A/U	E1006	CONNECTOR, adapter	1	
–195	K7128296P1	—	SHAFT	4	
–196	ML7771835G1	E1003	CAVITY, tuned (See Figure 19 for breakdown)	1	
–197	AN515–6R4	—	SCREW, mach: Phillips drive; RH; steel, cad pl; No. 6–32; 1/4 in lg (Att. Pt.)	4	
–198	AN936B6B	—	WASHER, lock: bronze, tinned; round, No. 6; shakeproof-type, tw ext teeth (Att. Pt.)	4	
–199	K7001524P1	—	COUPLING, rigid	4	
–200	UG27A/U	E1005	CONNECTOR, adapter	1	
–201	K7129216P1	—	CLAMP	1	
–202	7129222P1	—	CLAMP	1	
–203	AN515–8R6	—	SCREW, mach: Phillips drive; RH; steel, cad pl; No. 8–32; 3/8 in lg (Att. Pt. for items 201 and 202)	4	
–204	AN936B8B	—	WASHER, lock: bronze, tinned; round, No. 8; shakeproof-type, tw ext teeth (Att. Pt. for items 201 and 202)	4	
–205	606	E1001	CAVITY, tuned (Polytechnic Research and Development)	1	
–206	W7353923P20	—	SLEEVING, rubber	1	
–207	W7353923P21	—	SLEEVING, rubber	1	
–208	K7129215P1	—	MOUNTING, tuned cavity	1	
–209	K7129221P1	—	MOUNTING, tuned cavity	1	
–210	AN515–8R6	—	SCREW, mach: Phillips drive; RH; steel, cad pl; No. 8–32; 3/8 in lg (Att. Pt. for 208 and 209)	4	
–211	AN936B8B	—	WASHER, lock: bronze, tinned, round, No. 8; shakeproof-type, tw ext teeth (Att. Pt. for items 208 and 209)	4	
–212	M7481915P1	E1002	HOLDER, crystal	1	
	ML7002867G1	W1004	CABLE ASSEMBLY, RF	1	
–213	RG59/U	—	. CABLE, RF: 3-1/4 in lg	1	
–214	UG260/U	P1022	. CONNECTOR, plug	1	
–215	M7403661P18	—	. TUBING	1	
✦					
	ML7403791G1	W1009	CABLE ASSEMBLY	1	
–217	K7125446P2	P1007	. CONNECTOR, plug	1	
–218	K7125446P1	P2715	. CONNECTOR, plug	1	
–219	K7896564P6	—	. CLAMP	2	
–220	NP137427G	—	. MARKER, cable	1	
–221	NP137426K	—	. MARKER, cable	1	
–222	NP140305B	—	. MARKER, cable	1	
–223	M7403661P26	—	. SLEEVE, insulating: 1 in lg	2	
–224	No Number	—	. CABLE, RF: 70 in lg (M7403791P8 thru P16, assembled)	1	
	ML7403790G1	W1008	CABLE ASSEMBLY	1	

FIG. & INDEX NO.	PART NUMBER	REF SYMBOL	1 2 3 4 5 6 7 NOMENCLATURE	UNITS PER ASSY	APPLI-CATION
			RADAR RECEIVER R–309/CPS–6B (Cont)		
17–225	K7897091P2	P1005	. . . . CONNECTOR, plug	1	
–226	K7897091P1	P2714	. . . . CONNECTOR, plug	1	
–227	K7896564P3	—	. . . . CLAMP	2	
–228	NP137427F	—	. . . . MARKER, cable	1	
–229	NP137426J	—	. . . . MARKER, cable	1	
–230	NP140305A	—	. . . . MARKER, cable	1	
–231	M7472368P23	—	. . . . SLEEVE, insulating	2	
–232	No Number	—	. . . . CABLE, RF (M7403790P13 thru P18, assembled)	1	
	ML7403790G2	W1010	. . . CABLE ASSEMBLY	1	
–233	K7897091P2	P902	. . . . CONNECTOR, plug	1	
–234	K7897091P1	P1008	. . . . CONNECTOR, plug	1	
–235	K7896564P3	—	. . . . CLAMP	2	
–236	NP137427H	—	. . . . MARKER, cable	1	
–237	NP137430D	—	. . . . MARKER, cable	1	
–238	NP140305C	—	. . . . MARKER, cable	1	
–239	M7403661P23	—	. . . . SLEEVE, insulating	2	
–240	No Number	—	. . . . CABLE, RF (M7403790P11, P12, P13, P19 thru P23, assembled)	1	
	ML7403769G2	W1005	. . . CABLE ASSEMBLY	1	
–241	M7468567P1	P1001	. . . . CONNECTOR, plug	1	
–242	M7468567P1	P2713	. . . . CONNECTOR, plug	1	
–243	NP137410N	—	. . . . MARKER, cable	1	
–244	NP137410E1	—	. . . . MARKER, cable	1	
–245	NP140084E	—	. . . . MARKER, cable	1	
–246	RG59/U	—	. . . . CABLE, RF: 56-3/4 in lg	1	
	ML7403769G5	W1011	. . . CABLE ASSEMBLY	1	
–247	M7468567P1	P1023	. . . . CONNECTOR, plug	1	
–248	M7468567P1	P903	. . . . CONNECTOR, plug	1	
–249	NP137405E	—	. . . . MARKER, cable	1	
–250	NP137409D	—	. . . . MARKER, cable	1	
–251	NP140084H	—	. . . . MARKER, cable	1	
–252	RG59/U	—	. . . . CABLE, RF: 46-1/4 in lg	1	
	ML7403769G3	W1006	. . . CABLE ASSEMBLY	1	
–253	M7468567P1	P901	. . . . CONNECTOR, plug	1	
–254	M7468567P1	P1002	. . . . CONNECTOR, plug	1	
–255	NP137405D	—	. . . . MARKER, cable	1	
–256	NP137409A	—	. . . . MARKER, cable	1	
–257	NP140084G	—	. . . . MARKER, cable	1	
–258	RG71/U	—	. . . . CABLE, RF: 30 in lg	1	
	ML7403769G4	W1007	. . . CABLE ASSEMBLY	1	
–259	M7468567P1	P1003	. . . . CONNECTOR, plug	1	
–260	M7468567P1	P2712	. . . . CONNECTOR, plug	1	
–261	NP137410M	—	. . . . MARKER, cable	1	
–262	NP137409B	—	. . . . MARKER, cable	1	
–263	NP140084F	—	. . . . MARKER, cable	1	
–264	RG59/U	—	. . . . CABLE, RF: 56-1/2 in lg	1	
–265	UG262/U	J1023	. . . CONNECTOR, receptacle	1	
–266	UG262/U	J1001	. . . CONNECTOR, receptacle	1	
–267	UG290/U	J1002	. . . CONNECTOR, receptacle	1	
–268	UG290/U	J1003	. . . CONNECTOR, receptacle	1	
–269	UG290/U	J1004	. . . CONNECTOR, receptacle	1	
–270	M7468534P2	—	. . . CAP AND CHAIN SUBASSEMBLY	1	
–271	AN520–3R4	—	. . . SCREW, mach: Phillips drive; RH; steel, cad pl; No. 3–56; 1/4 in lg (Att. Pt. for items 265 thru 270)	20	
–272	1103	—	. . . WASHER, lock (Att. Pt. for items 265 thru 270) (Shakeproof)	20	
–273	AN3102–22–33P	J1007	. . . CONNECTOR, receptacle	1	
–274	AN3102–14S5P	J1005	. . . CONNECTOR, receptacle	1	
–275	AN3102–14S5S	J1008	. . . CONNECTOR, receptacle	1	
–276	AN515–4R5	—	. . . SCREW, mach: Phillips drive; steel, cad pl; No. 4–40; 5/16 in lg (Att. Pt. for items 273, 274 and 275)	12	
–277	AN936B4B	—	. . . WASHER, lock: bronze, tinned; round, No. 4; shakeproof-type, tw ext teeth (Att. Pt. for items 273, 274 and 275)	12	
–278	AN340–4	—	. . . NUT, hex: steel, cad pl; No. 4–40 (Att. Pt. for items 273, 274 and 275)	12	
–279	K7129230P2	—	. . . BRACKET	1	
–280	AN515–4–4	—	. . . SCREW, mach: slot drive; RH; steel, cad pl; No. 4–40; 1/4 in lg (Att. Pt.)	1	
–281	AN936B4B	—	. . . WASHER, lock: bronze, tinned; round, No. 4; shakeproof-type, tw ext teeth (Att. Pt.)	1	
–282	AN340–4	—	. . . NUT, hex: steel, cad pl; No. 4–40 (Att. Pt.)	1	
–283	K7129230P2	—	. . . BRACKET	1	
–284	M7480544P4D	—	. . . POST, spacing	1	
–285	AN515–4–4	—	. . . SCREW, mach: slot drive; RH; steel, cad pl; No. 4–40; 1/4 in lg (Att. Pt. for items 283 and 284)	1	
–286	AN936B4B	—	. . . WASHER, lock: bronze, tinned; round, No. 4; shakeproof-type, tw ext teeth (Att. Pt. for items 283 and 284)	1	
–287	AN340–4	—	. . . NUT, hex: steel, cad pl; No. 4–40 (Att. Pt. for items 283 and 284)	1	
–288	CP53B1FF205K	C1019	. . . CAPACITOR, fixed	1	
–289	AN515–6–5	—	. . . SCREW, mach: slot drive; RH; steel, cad pl; No. 6–32; 5/16 in lg (Att. Pt.)	2	
–290	AN936B6B	—	. . . WASHER, lock: bronze, tinned; round, No. 6; shakeproof-type, tw ext teeth (Att. Pt.)	2	
–291	AN340–6	—	. . . NUT, hex: steel, cad pl; No. 6–32 (Att. Pt.)	2	
–292	CP70B1FF805K	C1020	. . . CAPACITOR, fixed	1	
–293	CP07SC2	—	. . . CLAMP (Att. Pt.)	2	
–294	AN345–10	—	. . . NUT, hex: steel, cad pl; No. 10–32 (Att. Pt.)	2	

FIG. & INDEX NO.	PART NUMBER	REF SYMBOL	NOMENCLATURE 1 2 3 4 5 6 7	UNITS PER ASSY	APPLI-CATION
			RADAR RECEIVER R–309/CPS–6B (Cont)		
17–295	AN936B10B	—	. . . WASHER, lock: bronze, tinned; round, No. 10; shakeproof-type, tw ext teeth (Att. Pt.)	2	
–296	K7007284P1	—	. . . BRACKET	1	
–297	AN520–10–7	—	. . . SCREW, mach: slot drive; RH; steel, cad pl; No. 10–32; 7/16 in lg (Att. Pt.)	2	
–298	AN936B10B	—	. . . WASHER, lock: bronze, tinned; round, No. 10; shakeproof-type, tw ext teeth (Att. Pt.)	2	
–299	AN345–10	—	. . . NUT, hex: steel, cad pl; No. 10–32 (Att. Pt.)	2	
–300	RC40BF680J	R1038	. . . RESISTOR, fixed	1	
–301	M7480481P1	L1002	. . . REACTOR	1	
–302	AN340–6	—	. . . NUT, hex: steel, cad pl; No. 6–32 (Att. Pt.)	4	
–303	AN936B6B	—	. . . WASHER, lock: bronze, tinned; round, No. 6; shakeproof-type, tw ext teeth (Att. Pt.)	4	
–304	K7007284P1	—	. . . BRACKET	1	
–305	AN520–10–7	—	. . . SCREW, mach: slot drive; RH; steel, cad pl; No. 10–32; 7/16 in lg (Att. Pt.)	2	
–306	AN936B10B	—	. . . WASHER, lock: bronze, tinned; round, No. 10; shakeproof-type, tw ext teeth (Att. Pt.)	2	
–307	AN345–10	—	. . . NUT, hex: steel, cad pl; No. 10–32 (Att. Pt.)	2	
	ML7129232G1	—	. . . CAPACITOR-RESISTOR SUBASSEMBLY	1	
–308	AN515–8R6	—	. . . SCREW, mach: Phillips drive; RH; steel, cad pl; No. 8–32; 3/8 in lg (Att. Pt.)	2	
–309	AN936B8B	—	. . . WASHER, lock: bronze, tinned; round, No. 8; shakeproof-type, tw ext teeth (Att. Pt.)	2	
–310	RC20BF221J	R1007	. . . . RESISTOR, fixed	1	
–311	RC20BF105J	R1004	. . . . RESISTOR, fixed	1	
–312	CP26A1EF104K	C1001	. . . . CAPACITOR, fixed	1	
–313	RC40BF332J	R1034	. . . . RESISTOR, fixed	1	
–314	RC40BF332J	R1035	. . . . RESISTOR, fixed	1	
–315	RC20BF104J	R1028	. . . . RESISTOR, fixed	1	
–316	CM30D102J	C1014	. . . . CAPACITOR, fixed	1	
–317	RC40BF682J	R1006	. . . . RESISTOR, fixed	1	
–318	RC40BF682J	R1005	. . . . RESISTOR, fixed	1	
–319	K7126106P2	—	. . . . POST, supporting	2	
–320	AN515–8–7	—	. . . . SCREW, mach: slot drive; RH; steel, cad pl; No. 8–32; 7/16 in lg (Att. Pt.)	4	
–321	AN936B8B	—	. . . . WASHER, lock: bronze, tinned; round, No. 8; shakeproof-type, tw ext teeth (Att. Pt.)	4	
	ML7129226G1	—	. . . . BOARD, terminal	1	
–322	K7129226P1	—	. . . . . PANEL	1	
–323	T100–3	—	. . . . . TERMINAL, stud (Bead Chain)	17	
–324	M7480544P17C	—	. . . POST, spacing	1	
	ML7481824G1	—	. . . CAPACITOR-RESISTOR SUBASSEMBLY	1	
–325	AN515–8R4	—	. . . SCREW, mach: Phillips drive; RH; steel, cad pl; No. 8–32; 1/4 in lg (Att. Pt. for ML7481824G1 and item 324)	8	
–326	AN936B8B	—	. . . WASHER, lock: bronze, tinned; round, No. 8; shakeproof-type, tw ext teeth (Att. Pt. for ML7481824G1 and item 324)	8	
–327	RC20BF221J	R1037	. . . . RESISTOR, fixed	1	
–328	RC20BF104J	R1023	. . . . RESISTOR, fixed	1	
–329	RC20BF100J	R1016	. . . . RESISTOR, fixed	1	
–330	RC40BF153J	R1018	. . . . RESISTOR, fixed	1	
–331	RC20BF683J	R1010	. . . . RESISTOR, fixed	1	
–332	RC20BF104J	R1022	. . . . RESISTOR, fixed	1	
–333	RC40BF153J	R1019	. . . . RESISTOR, fixed	1	
–334	RC30BF153J	R1026	. . . . RESISTOR, fixed	1	
–335	RC20BF682J	R1024	. . . . RESISTOR, fixed	1	
–336	RC20BF100J	R1012	. . . . RESISTOR, fixed	1	
–337	CP26A1EF104K	C1006	. . . . CAPACITOR, fixed	1	
–338	CP26A1EF103V	C1008	. . . . CAPACITOR, fixed	1	
–339	CP26A1EF104K	C1009	. . . . CAPACITOR, fixed	1	
–340	CP26A1EF103V	C1011	. . . . CAPACITOR, fixed	1	
–341	CP26A1EF104K	C1015	. . . . CAPACITOR, fixed	1	
–342	TH17	—	. . . . CLIP (Mallory)	3	
–343	TH15	—	. . . . CLIP (Mallory)	2	
–344	AN515–4R4	—	. . . . SCREW, mach: Phillips drive; RH; steel, cad pl; No. 4–40; 1/4 in lg (Att. Pt. for items 342 and 343)	5	
–345	AN936B4B	—	. . . . WASHER, lock: bronze, tinned; round, No. 4; shakeproof-type, tw ext teeth (Att. Pt. for items 342 and 343)	5	
–346	AN340–4	—	. . . . NUT, hex: steel, cad pl; No. 4–40 (Att. Pt. for items 342 and 343)	5	
	ML7481951G1	—	. . . . BOARD, terminal	1	
–347	K7481951P2	—	. . . . . PANEL	1	
–348	T100–3	—	. . . . . TERMINAL, stud (Bead Chain)	24	
–349	RC20BF331J	R1014	. . . RESISTOR, fixed	1	
–350	RC20BF152J	R1013	. . . RESISTOR, fixed	1	
–351	RC20BF104J	R1036	. . . RESISTOR, fixed	1	
–352	RC40BF222J	R1017	. . . RESISTOR, fixed	1	
–353	CM20D331J	C1018	. . . CAPACITOR, fixed	1	
–354	CM30D302J	C1002	. . . CAPACITOR, fixed	1	
–355	CM30D222J	C1003	. . . CAPACITOR, fixed	1	
–356	RC20BF682J	R1021	. . . RESISTOR, fixed	1	
–357	RC20BF474J	R1015	. . . RESISTOR, fixed	1	
–358	RC20BF102J	R1025	. . . RESISTOR, fixed	1	
–359	RC20BF472J	R1009	. . . RESISTOR, fixed	1	

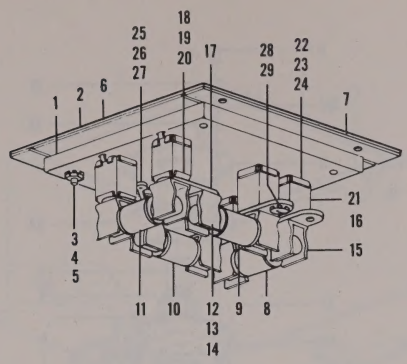

Figure 18. Cover-Resistor Subassembly

FIG. & INDEX NO.	PART NUMBER	REF SYMBOL	1 2 3 4 5 6 7 NOMENCLATURE	UNITS PER ASSY	APPLI-CATION
			COVER-RESISTOR SUBASSEMBLY		
18–	ML7771847G1	—	. . . COVER-RESISTOR SUBASSEMBLY (See Figure 17–4 for next higher assembly)	Ref	
–1	No Number	—	. . . . COVER SUBASSEMBLY (P7771847P3 and P19 assembled)	1	
–2	ML7481937G1	—	. . . . PLATE, cover	1	
–3	AN520–10–12	—	. . . . SCREW, mach: slot drive; RH; steel, cad pl; No. 10–32; 3/4 in lg (Att. Pt.)	4	
–4	AN936B10B	—	. . . . WASHER, lock: bronze, tinned; round, No. 10; shakeproof-type, tw ext teeth (Att. Pt.)	4	
–5	AN345–10	—	. . . . NUT, hex: steel, cad pl; No. 10–32 (Att. Pt.)	4	
–6	K7129206P1	—	. . . . GASKET	2	
–7	K7129206P2	—	. . . . GASKET	2	
–8	RW16F800	R1033	. . . . RESISTOR, fixed	1	
–9	RW16F800	R1030	. . . . RESISTOR, fixed	1	
–10	RW16F800	R1032	. . . . RESISTOR, fixed	1	
–11	RW16F800	R1031	. . . . RESISTOR, fixed	1	
–12	M7475006P6	—	. . . . CLIP	3	
–13	AN520–10–5	—	. . . . SCREW, mach: slot drive; RH; steel, cad pl; No. 10–32; 5/16 in lg (Att. Pt.)	3	
–14	AN936B10B	—	. . . . WASHER, lock: bronze, tinned; round, No. 10; shakeproof-type, tw ext teeth (Att. Pt.)	3	
–15	M7475006P6	—	. . . . CLIP	5	
–16	K7119193P3	—	. . . . TERMINAL, lug	2	
–17	K7129204P1	—	. . . . TERMINAL, lug	3	
–18	K7107772P1	—	. . . . CLIP	5	
–19	AN520–10–7	—	. . . . SCREW, mach: slot drive; RH; steel, cad pl; No. 10–32; 7/16 in lg (Att. Pt. for items 15 thru 18)	5	
–20	AN936B10B	—	. . . . WASHER, lock: bronze, tinned; round, No. 10; shakeproof-type, tw ext teeth (Att. Pt. for items 15 thru 18)	5	
–21	K7106961P1	—	. . . . INSULATOR, standoff	5	
–22	K7107772P1	—	. . . . CLIP	5	
–23	AN520–10–7	—	. . . . SCREW, mach: slot drive; RH; steel, cad pl; No. 10–32; 7/16 in lg (Att. Pt. for items 21 and 22)	5	
–24	AN936B10B	—	. . . . WASHER, lock: bronze, tinned; round, No. 10; shakeproof-type, tw ext teeth (Att. Pt. for items 21 and 22)	5	
–25	M7403276P1	S1004	. . . . SWITCH, thermostatic	1	
–26	AN515–6–12	—	. . . . SCREW, mach: slot drive; RH; steel, cad pl; No. 6–32; 3/4 in lg (Att. Pt.)	1	
–27	AN936B6B	—	. . . . WASHER, lock: bronze, tinned; round, No. 6; shakeproof-type, tw ext teeth (Att. Pt.)	1	
–28	AN520–10–7	—	. . . . SCREW, mach: slot drive; RH; steel, cad pl; No. 10–32; 7/16 in lg	2	
–29	AN936B10B	—	. . . . WASHER, lock: bronze, tinned; round, No. 10; shakeproof-type, tw ext teeth	2	

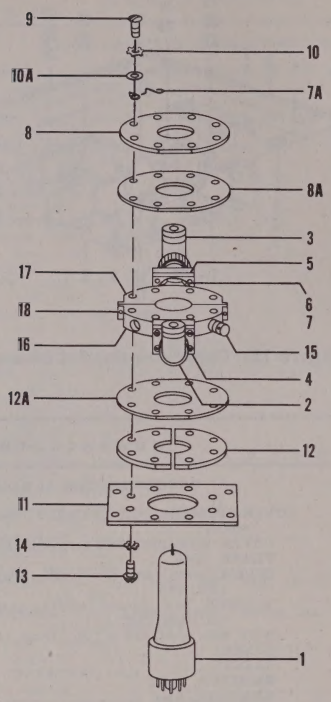

Figure 19. Tuned Cavity

FIG. & INDEX NO.	PART NUMBER	REF SYMBOL	NOMENCLATURE 1 2 3 4 5 6 7	UNITS PER ASSY	APPLI-CATION
			TUNED CAVITY		
19–	ML7771835G1	E1003	. . . TUNED CAVITY (See Figure 17-196 for next higher assembly)	Ref	
–1	2K28	V1006	. . . . TUBE, electron	1	
–2	UG27A/U	E1009	. . . . CONNECTOR, adapter (Includes J1010 and P1009)	1	
–3	UG27A/U	E1008	. . . . CONNECTOR, adapter (Includes J1014 and P1013)	1	
–4	ML7128287G1	J1009	. . . . CONNECTOR, receptacle	1	
–5	ML7128287G1	J1013	. . . . CONNECTOR, receptacle	1	
–6	Coml	—	. . . . NUT, hex: steel, cad pl; 5/16 in-24 (Att. Pt. for items 4 and 5) (Amer Screw)	2	
–7	1918	—	. . . . WASHER, lock (Att. Pt. for items 4 and 5) (Shakeproof)	2	
–7A	K7005340P1	—	. . . . SPRING	4	
–8	K7128274P1	—	. . . . PLATE, connector	1	
–8A	K7004554P1	—	. . . . SHIM	1	
–9	AN515-4-5	—	. . . . SCREW, mach: slot drive; RH; steel, cad pl; No. 4-40; 5/16 in lg (Att. Pt. for items 7A, 8 and 8A)	8	
–10	AN936B4B	—	. . . . WASHER, lock: bronze, tinned; round, No. 4; shakeproof-type, tw ext teeth (Att. Pt. for items 7A, 8 and 8A)	8	
–10A	AN960-4	—	. . . . WASHER, flat: steel, cad pl; No. 4 (Att. Pt. for items 7A, 8 and 8A)	8	
–1"	K7128276P1	—	. . . . PLATE, mounting	1	
–12	K7128275P1	—	. . . . PLATE, mounting	1	
–12A	K7004554P1	—	. . . . SHIM	1	
–13	AN515-4-6	—	. . . . SCREW, mach: slot drive; RH; steel, cad pl; No. 4-40; 3/8 in lg (Att. Pt. for items 11, 12 and 12A)	8	
–14	AN936B4B	—	. . . . WASHER, lock: bronze, tinned; round, No. 4; shakeproof-type, tw ext teeth (Att. Pt. for items 11, 12 and 12A)	8	
–15	K7128297P1	—	. . . . CORE, adjustable tuning	4	
	ML7128299G1	—	. . . . CAVITY, tuned	1	
–16	K7128298P1	—	. . . . . SECTION, tuned cavity	1	
–17	K7128298P2	—	. . . . . SECTION, tuned cavity	1	
–18	Coml	—	. . . . . PIN, dowel: SS, passivated; 0.064 in diam x 3/8 in lg (Att. Pt. for items 16 and 17) (Allen Mfg)	2	

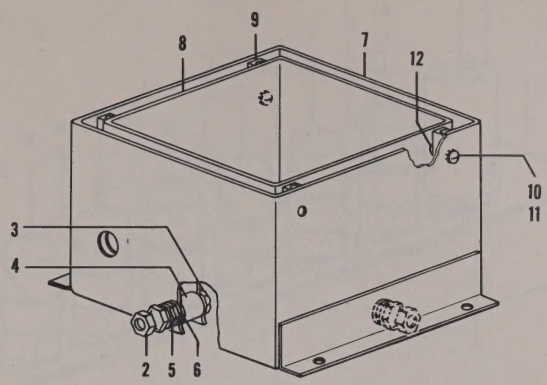

Figure 20. Oven

FIG. & INDEX NO.	PART NUMBER	REF SYMBOL	1 2 3 4 5 6 7 NOMENCLATURE	UNITS PER ASSY	APPLI-CATION
			OVEN		
20–	ML7771846G1	—	. . . OVEN (See Figure 17–143 for next higher assembly)	Ref	
✦					
–2	10061	—	. . . . COLLET (Millen)	4	
–3	K7128295P1	—	. . . . BUSHING	4	
–4	P7771846P9	—	. . . . SLEEVE, spacer	4	
–5	K7870535	—	. . . . NUT, hex (Att. Pt. for items 3 and 4)	6	
–6	AN936A616B	—	. . . . WASHER, lock: bronze, tinned; round, 3/8 in; shakeproof-type, tw int teeth (Att. Pt. for items 3 and 4)	8	
–7	ML7771848G1	—	. . . . HOUSING	1	
–8	ML7481939G1	—	. . . . CASE	1	
–9	K7129200P1	—	. . . . BLOCK, spacing	4	
–10	AN515–6–5	—	. . . . SCREW, mach: slot drive; RH; steel, cad pl; No. 6–32; 5/16 in lg (Att. Pt. for items 7, 8 and 9)	8	
–11	AN936B6B	—	. . . . WASHER, lock: bronze, tinned; round, No. 6; shakeproof-type, tw ext teeth (Att. Pt. for items 7, 8 and 9)	8	
–12	K7874555P26	—	. . . . WASHER, flat	4	
			IF AMPLIFIER AM–306/CPS–6B		
21–	ML7666709G1	—	. IF AMPLIFIER AM–306/CPS–6B (See Figure 4–9 for next higher assembly)	Ref	
–1	K7128230P3	—	. . SCREW, captive	4	
–2	T7666706P1	—	. . CHASSIS	1	
–3	ML7771810G1	—	. . COVER	1	
–4	M7472349P5	—	. . SHIELD, tube	8	
–5	6AK5	V901	. . TUBE, electron	1	
–6	6AK5	V902	. . TUBE, electron	1	
–7	6AK5	V903	. . TUBE, electron	1	
–8	6AK5	V904	. . TUBE, electron	1	
–9	6AK5	V905	. . TUBE, electron	1	
–10	6AK5	V906	. . TUBE, electron	1	
–11	6AK5	V907	. . TUBE, electron	1	
–12	6AK5	V908	. . TUBE, electron	1	
–13	SO10M	XV901	. . SOCKET, tube	1	
–14	SO10M	XV902	. . SOCKET, tube	1	
–15	SO10M	XV903	. . SOCKET, tube	1	
–16	SO10M	XV904	. . SOCKET, tube	1	
–17	SO10M	XV905	. . SOCKET, tube	1	
–18	SO10M	XV906	. . SOCKET, tube	1	
–19	SO10M	XV907	. . SOCKET, tube	1	
–20	SO10M	XV908	. . SOCKET, tube	1	
–21	AN515–4–4	—	. . SCREW, mach: slot drive; RH; steel, cad pl; No. 4–40; 1/4 in lg (Att. Pt. for items 13 thru 20)	16	
–22	AN936A4B	—	. . WASHER, lock: bronze, tinned; round, No. 4; shakeproof-type, tw int teeth (Att. Pt. for items 13 thru 20)	16	
–23	AN3102–14S5P	J902	. . CONNECTOR, receptacle	1	
–24	AN515–4–5	—	. . SCREW, mach: slot drive; RH; steel, cad pl; No. 4–40; 5/16 in lg (Att. Pt.)	4	

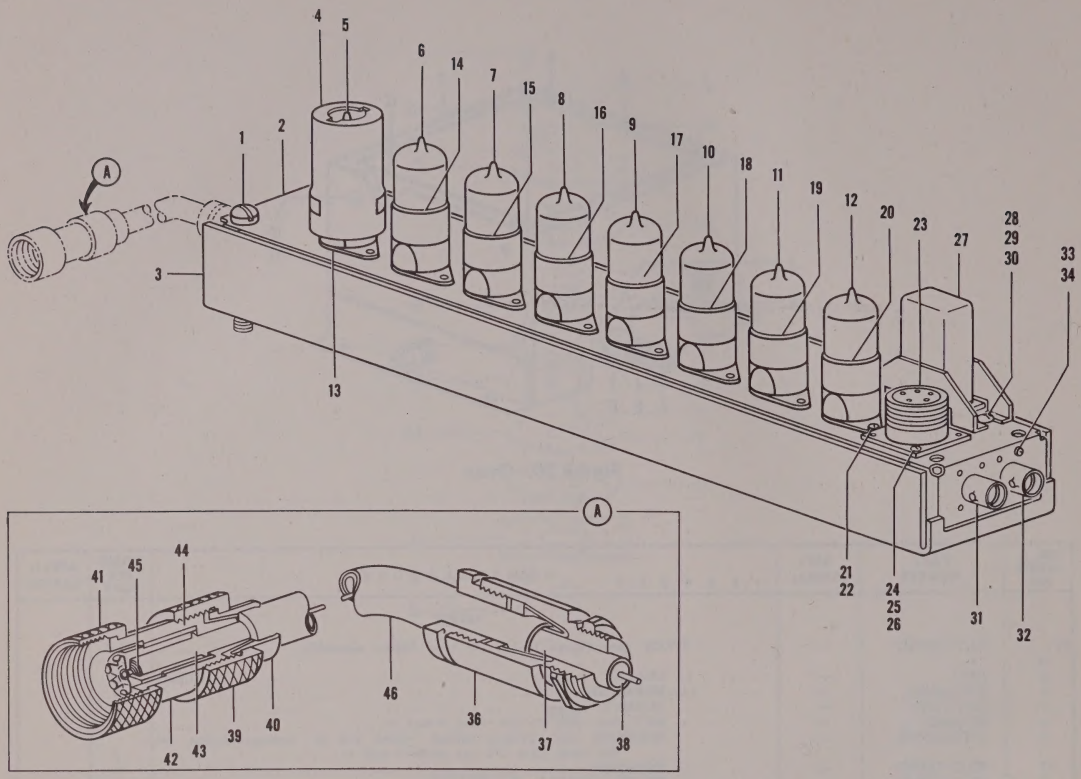

Figure 21. IF Amplifier AM–306/CPS–6B, Front View (Sheet 1 of 2 sheets, Index Nos. 1 thru 46)

FIG. & INDEX NO.	PART NUMBER	REF SYMBOL	NOMENCLATURE 1 2 3 4 5 6 7	UNITS PER ASSY	APPLI-CATION
			IF AMPLIFIER AM–306/CPS–6B (Cont)		
21–25	AN936A4B	—	. . WASHER, lock: bronze, tinned; round, No. 4; shakeproof-type, tw int teeth (Att. Pt.)	4	
–26	AN340–4	—	. . NUT, hex: steel, cad pl; No. 4–40 (Att. Pt.)	4	
–27	CP65B1FF504K	C939	. . CAPACITOR, fixed	1	
–28	AN515–6–4	—	. . SCREW, mach: slot drive; RH; steel, cad pl; No. 6–32; 1/4 in lg (Att. Pt.)	2	
–29	AN936A6B	—	. . WASHER, lock: bronze, tinned; round, No. 6; shakeproof-type, tw int teeth (Att. Pt.)	2	
–30	AN340–6	—	. . NUT, hex: steel, cad pl; No. 6–32 (Att. Pt.)	2	
–31	UG290/U	J903	. . CONNECTOR, receptacle	1	
–32	UG290/U	J901	. . CONNECTOR, receptacle	1	
–33	AN520–3–4	—	. . SCREW, mach: slot drive; RH; steel, cad pl; No. 3–56; 1/4 in lg (Att. Pt. for items 31 and 32)	8	
–34	AN936A3	—	. . WASHER, lock: steel, cad pl; round, No. 3; shakeproof-type, tw int teeth (Att. Pt. for items 31 and 32)	8	
✦					
	ML7471136G1	W901	. . CABLE ASSEMBLY, power	1	
–36	D102B	—	. . . HANGER, cable (Industrial Prod Co)	1	
–37	M7472368P14	—	. . . INSULATION, flexible sleeve	1	
–38	M7472368P1	—	. . . INSULATION, flexible sleeve	1	
	No Number	P2601	. . . CONNECTOR, plug	1	
–39	K7898666P1	—	. . . . NUT, knurled	1	
–40	K7003158P1	—	. . . . SLEEVE, plug	1	
–41	K7898757P1	—	. . . . NUT, knurled	1	
–42	K7898665P1	—	. . . . SLEEVE, coupling	2	

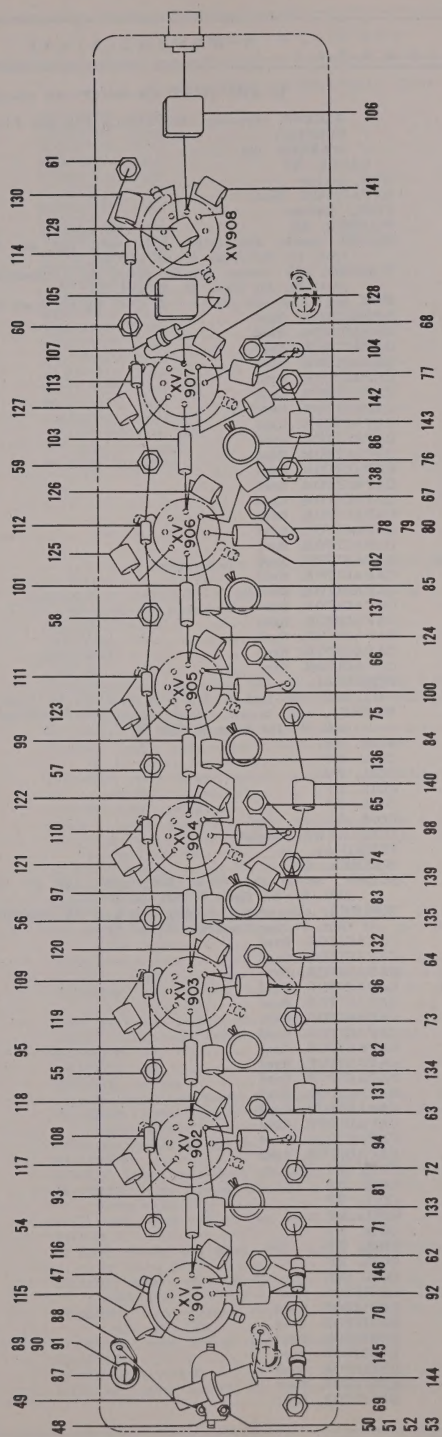

Figure 21. IF Amplifier AM–306/CPS–6B, Bottom View (Sheet 2 of 2 sheets, Index Nos. 47 thru 146)

FIG. & INDEX NO.	PART NUMBER	REF SYMBOL	NOMENCLATURE 1 2 3 4 5 6 7	UNITS PER ASSY	APPLI-CATION
			IF AMPLIFIER AM–306/CPS–6B (Cont)		
21–43	No Number	—	. . . . SLEEVE, centering (M7471136P9, P10 and P15, assembled)	1	
–44	K7898673P1	—	. . . . BUSHING	1	
–45	K7898633P1	—	. . . . WASHER, flat	1	
–46	RG6/U	—	. . . CABLE, RF	1	
–47	M7476323P5	—	. . NUT, anchor	8	
–48	CP53B1FF503K	C901	. . CAPACITOR, fixed	1	
–49	T7666709P25	—	. . POST, spacing	2	
–50	K7872446	—	. . WASHER, flat	2	
–51	AN515–4–12	—	. . SCREW, mach: slot drive; RH; steel, cad pl; No. 4–40; 3/4 in lg (Att. Pt. for items 48, 49 and 50)	2	
–52	AN936A4B	—	. . WASHER, lock: bronze, tinned; round, No. 4; shakeproof-type, tw int teeth (Att. Pt. for items 48, 49 and 50)	2	
–53	AN340–4	—	. . NUT, hex: steel, cad pl; No. 4–40 (Att. Pt. for items 48, 49 and 50)	2	
–54	K7001403P3	C930	. . CAPACITOR, fixed	1	
–55	K7001403P3	C931	. . CAPACITOR, fixed	1	
–56	K7001403P3	C932	. . CAPACITOR, fixed	1	
–57	K7001403P3	C933	. . CAPACITOR, fixed	1	
–58	K7001403P3	C934	. . CAPACITOR, fixed	1	
–59	K7001403P3	C935	. . CAPACITOR, fixed	1	
–60	K7001403P3	C936	. . CAPACITOR, fixed	1	
–61	K7001403P3	C937	. . CAPACITOR, fixed	1	
–62	K7124442P4	C903	. . CAPACITOR, fixed	1	
–63	K7124442P4	C907	. . CAPACITOR, fixed	1	
–64	K7124442P4	C911	. . CAPACITOR, fixed	1	
–65	K7124442P4	C914	. . CAPACITOR, fixed	1	
–66	K7124442P4	C917	. . CAPACITOR, fixed	1	
–67	K7124442P4	C920	. . CAPACITOR, fixed	1	
–68	K7124442P4	C923	. . CAPACITOR, fixed	1	
–69	K7001403P3	C925	. . CAPACITOR, fixed	1	
–70	K7001403P3	C926	. . CAPACITOR, fixed	1	
–71	K7001403P3	C927	. . CAPACITOR, fixed	1	
–72	K7001403P3	C905	. . CAPACITOR, fixed	1	
–73	K7001403P3	C909	. . CAPACITOR, fixed	1	
–74	K7001403P3	C928	. . CAPACITOR, fixed	1	
–75	K7001403P3	C929	. . CAPACITOR, fixed	1	
–76	K7001403P3	C941	. . CAPACITOR, fixed	1	
–77	K7001403P3	C938	. . CAPACITOR, fixed	1	
–78	K7869103	—	. . TERMINAL, lug	7	
–79	AN340–6	—	. . NUT, hex: steel, cad pl; No. 6–32 (Att. Pt. for items 54 thru 78)	24	
–80	AN936A6B	—	. . WASHER, lock: bronze, tinned; round, No. 6; shakeproof-type, tw int teeth (Att. Pt. for items 54 thru 78)	24	
–81	ML7126608G2	L903	. . COIL, RF	1	
–82	ML7126608G1	L904	. . COIL, RF	1	
–83	ML7126608G3	L905	. . COIL, RF	1	
–84	ML7126608G1	L906	. . COIL, RF	1	
–85	ML7126608G3	L907	. . COIL, RF	1	
–86	ML7126608G2	L908	. . COIL, RF	1	
–87	M7462416P2	—	. . INSULATOR, standoff	3	
–88	K7869103	—	. . TERMINAL, lug	3	
–89	K7872445	—	. . WASHER, flat	6	
–90	AN515–6–4	—	. . SCREW, mach: slot drive; RH; steel, cad pl; No. 6–32; 1/4 in lg (Att. Pt. for items 87, 88 and 89)	6	
–91	AN936A6B	—	. . WASHER, lock: bronze, tinned; round, No. 6; shakeproof-type, tw int teeth (Att. Pt. for items 87, 88 and 89)	6	
–92	K7115115P3	C902	. . CAPACITOR, fixed	1	
–93	CC26UK101J	C904	. . CAPACITOR, fixed	1	
–94	K7115115P3	C906	. . CAPACITOR, fixed	1	
–95	CC26UK101J	C908	. . CAPACITOR, fixed	1	
–96	K7115115P3	C910	. . CAPACITOR, fixed	1	
–97	CC26UK101J	C912	. . CAPACITOR, fixed	1	
–98	K7115115P3	C913	. . CAPACITOR, fixed	1	
–99	CC21UJ510J	C915	. . CAPACITOR, fixed	1	
–100	K7115115P3	C916	. . CAPACITOR, fixed	1	
–101	CC21UJ510J	C918	. . CAPACITOR, fixed	1	
–102	K7115115P3	C919	. . CAPACITOR, fixed	1	
–103	CC21UJ510J	C921	. . CAPACITOR, fixed	1	
–104	CC21UJ470K	C922	. . CAPACITOR, fixed	1	
–105	CM35B103K	C924	. . CAPACITOR, fixed	1	
–106	CM35B103K	C940	. . CAPACITOR, fixed	1	
–107	K7102205P1	L909	. . COIL, RF	1	
–108	M7475057P1	L910	. . COIL, RF	1	
–109	M7475057P1	L911	. . COIL, RF	1	
–110	M7475057P1	L912	. . COIL, RF	1	
–111	M7475057P1	L913	. . COIL, RF	1	
–112	M7475057P1	L914	. . COIL, RF	1	
–113	M7475057P1	L915	. . COIL, RF	1	
–114	M7475057P1	L916	. . COIL, RF	1	
–115	P7770419P143	R901	. . RESISTOR, fixed	1	
–116	P7770419P163	R902	. . RESISTOR, fixed	1	
–117	P7770419P143	R903	. . RESISTOR, fixed	1	
–118	P7770419P170	R904	. . RESISTOR, fixed	1	
–119	P7770419P143	R905	. . RESISTOR, fixed	1	
–120	P7770419P169	R906	. . RESISTOR, fixed	1	
–121	P7770419P143	R907	. . RESISTOR, fixed	1	
–122	P7770419P170	R908	. . RESISTOR, fixed	1	

FIG. & INDEX NO.	PART NUMBER	REF SYMBOL	NOMENCLATURE 1 2 3 4 5 6 7	UNITS PER ASSY	APPLI-CATION
			IF AMPLIFIER AM–306/CPS–6B (Cont)		
21–123	P7770419P147	R909	. . RESISTOR, fixed	1	
–124	P7770419P169	R910	. . RESISTOR, fixed	1	
–125	P7770419P147	R911	. . RESISTOR, fixed	1	
–126	P7770419P163	R912	. . RESISTOR, fixed	1	
–127	P7770419P159	R913	. . RESISTOR, fixed	1	
–128	P7770419P167	R914	. . RESISTOR, fixed	1	
–129	P7770419P223	R915	. . RESISTOR, fixed	1	
–130	P7770419P143	R916	. . RESISTOR, fixed	1	
–131	P7770419P143	R917	. . RESISTOR, fixed	1	
–132	P7770419P143	R918	. . RESISTOR, fixed	1	
–133	P7770419P139	R919	. . RESISTOR, fixed	1	
–134	P7770419P139	R920	. . RESISTOR, fixed	1	
–135	P7770419P139	R921	. . RESISTOR, fixed	1	
–136	P7770419P139	R922	. . RESISTOR, fixed	1	
–137	P7770419P139	R923	. . RESISTOR, fixed	1	
–138	P7770419P139	R924	. . RESISTOR, fixed	1	
–139	P7770419P179	R925	. . RESISTOR, fixed	1	
–140	P7770419P143	R926	. . RESISTOR, fixed	1	
–141	P7770419P163	R927	. . RESISTOR, fixed	1	
–142	P7770419P139	R928	. . RESISTOR, fixed	1	
–143	P7770419P139	R929	. . RESISTOR, fixed	1	
–144	ML7481834G1	T901	. . TRANSFORMER, AF	1	
–145	ML7128210G1	Z901	. . FILTER, low pass	1	
–146	ML7128210G1	Z902	. . FILTER, low pass	1	
			FREQUENCY CONTROL C–595/CPS–6B		
22–	ML7352780G1	—	. FREQUENCY CONTROL C–595/CPS–6B (See Figures 2–8, 3–8, 4–10, 5 and 6 for next higher assembly)	Ref	
–1	K7126123P2	—	. . SCREW, captive	4	
–2	K7128235P2	—	. . BUSHING	4	
–3	T7665275P1	—	. . CHASSIS	1	
–4	ML7665294G1	—	. . COVER	1	
–5	AN515–6–4	—	. . SCREW, mach: slot drive; RH; steel, cad pl; No. 6–32; 1/4 in lg (Att. Pt.)	4	
–6	AN936B6B	—	. . WASHER, lock: bronze, tinned; round, No. 6; shakeproof-type, tw ext teeth (Att. Pt.)	4	
–7	ML7353090G1	—	. . CONTROL UNIT, frequency (See Figure 23 for breakdown)	1	
–8	AN515–416R6	—	. . SCREW, mach: Phillips drive; RH; steel, cad pl; 1/4 in–20; 3/8 in lg (Att. Pt.)	4	
–9	AN936B416B	—	. . WASHER, lock: bronze, tinned; round, 1/4 in; shakeproof-type, tw ext teeth (Att. Pt.)	4	
–10	AN3102–28–2P	J2801	. . CONNECTOR, receptacle	1	
–11	AN515–6–6	—	. . SCREW, mach: slot drive; RH; steel, cad pl; No. 6–32; 3/8 in lg (Att. Pt.)	4	
–12	AN936B6B	—	. . WASHER, lock: bronze, tinned; round, No. 6; shakeproof-type, tw ext teeth (Att. Pt.)	4	
–13	AN340–6	—	. . NUT, hex: steel, cad pl; No. 6–32 (Att. Pt.)	4	
–14	CP70B1FF605K	C2801	. . CAPACITOR, fixed	1	
–15	CP07SB6	—	. . CLAMP (Att. Pt.)	2	
–16	AN345–10	—	. . NUT, hex: steel, cad pl; No. 10–32 (Att. Pt.)	2	
–17	AN936B10B	—	. . WASHER, lock: bronze, tinned; round, No. 10; shakeproof-type, tw ext teeth (Att. Pt.)	2	
–18	MSX8–141	TB2801	. . BOARD, terminal (Jones HB)	1	
–19	AN515–6–10	—	. . SCREW, mach: slot drive; RH; steel, cad pl; No. 6–32; 5/8 in lg (Att. Pt.)	4	
			. . WASHER, lock: bronze, tinned; round, No. 6; shakeproof-type, tw ext teeth (Att. Pt.)	4	
–20	AN936B6B	—	. . NUT, hex: steel, cad pl; No. 6–32 (Att. Pt.)	4	
–21	AN340–6	—	. . SCREW, mach: slot drive; RH; brass, tin pl; No. 6–32; 1/4 in lg	16	
–22	AN508–6–4	—	. . WRENCH	1	
–23	K7876451P1	—	. . WRENCH	1	
–23A	K7871267P1	—	. . HOLDER, wrench	2	
–24	K7126174P1	—	. . SCREW, mach: slot drive; RH; steel, cad pl; No. 4–40; 5/16 in lg (Att. Pt.)	4	
–25	AN515–4–5	—	. . WASHER, lock: bronze, tinned; round, No. 4; shakeproof-type, tw ext teeth (Att. Pt.)	4	
–26	AN936B4B	—	. . NUT, hex: steel, cad pl; No. 4–40 (Att. Pt.)	4	
–27	AN340–4	—	. . BRACKET	1	
–28	M7403990P2	—	. . SCREW, mach: slot drive; RH; steel, cad pl; No. 10–32; 3/8 in lg (Att. Pt.)	2	
–29	AN520–10–6	—	. . WASHER, lock: bronze, tinned; round, No. 10; shakeproof-type, tw ext teeth (Att. Pt.)	2	
–30	AN936B10B	—	. . NUT, hex: steel, cad pl; No. 10–32 (Att. Pt.)	2	
–31	AN345–10	—	. . PANEL	1	
–32	P7772551P4	—	. . SCREW, mach: slot drive; RH; brass, black oxidized; No. 10–32; 7/16 in lg (Att. Pt.)	4	
–33	AN520B10–7	—	. . SCREW, mach: slot drive; FH; steel, cad pl; No. 10–32; 7/16 in lg (Att. Pt.)	2	
–34	AN510–10–7	—	. . WASHER, lock: bronze, tinned; round, No. 10; shakeproof-type, tw ext teeth (Att. Pt.)	6	
–35	AN936B10B	—	. . NUT, hex: steel, cad pl; No. 10–32 (Att. Pt.)	6	
–36	AN345–10	—	. . HANDLE	2	
–37	K7126122P6	—	. . WASHER, extruded	4	
–38	K7886371P2	—	. . NUT, hex: steel, cad pl; No. 10–32 (Att. Pt. for items 37 and 38)	4	
–39	AN345–10	—			

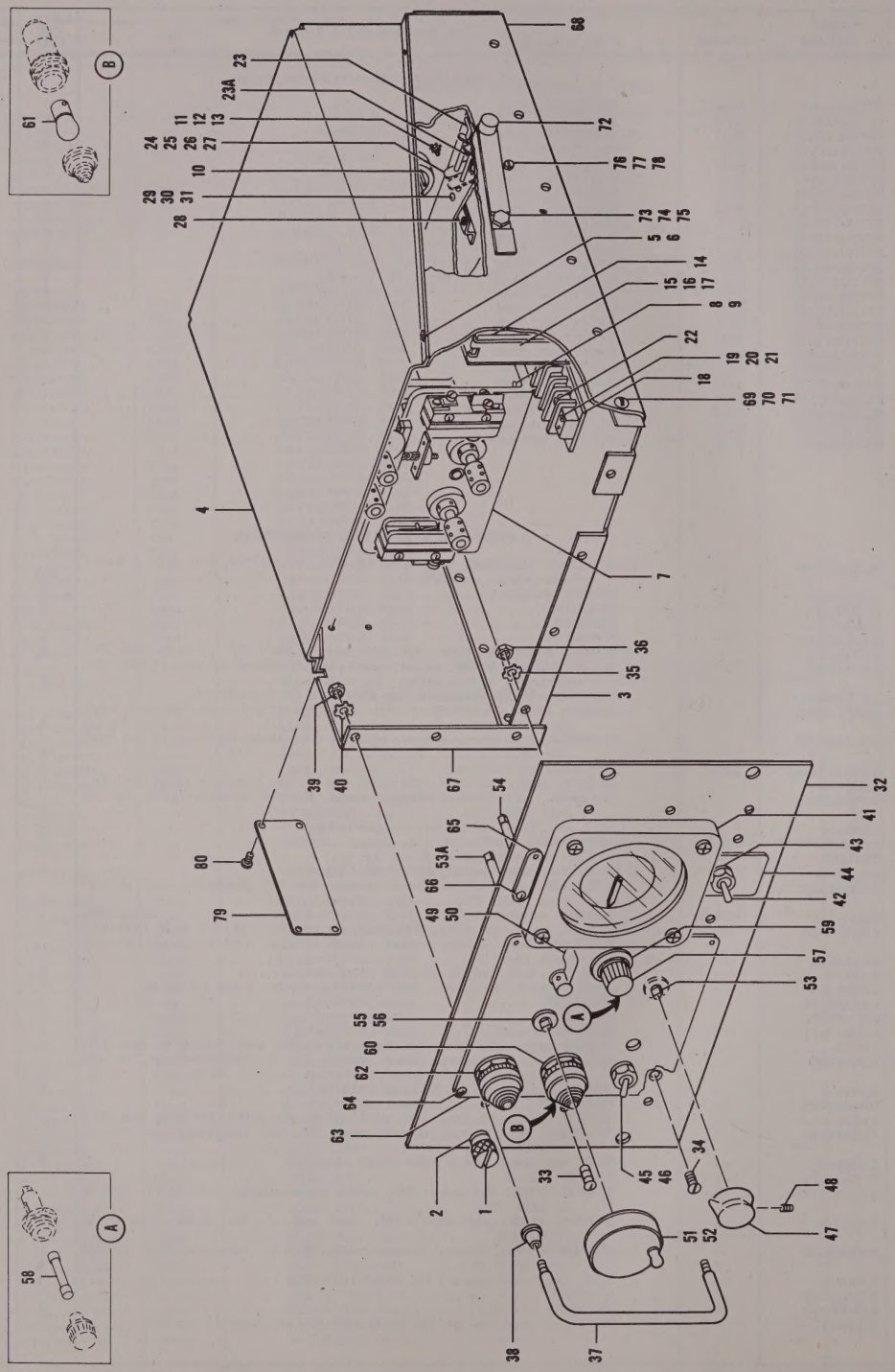

Figure 22. Frequency Control C–595/CPS–6B

FIG. & INDEX NO.	PART NUMBER	REF SYMBOL	1 2 3 4 5 6 7 NOMENCLATURE	UNITS PER ASSY	APPLI-CATION
			FREQUENCY CONTROL C–595/CPS–6B (Cont)		
22–40	AN936B10B	—	. . WASHER, lock: bronze, tinned; round, No. 10; shakeproof-type, tw ext teeth (Att. Pt. for items 37 and 38)	4	
–41	2–550	I2803	. . METER, frequency indicator (GE)	1	
–42	ST52S	S2802	. . SWITCH, toggle	1	
–43	1924–2	—	. . WASHER, lock (Att. Pt.) (Shakeproof)	1	
–44	NP136061	—	. . PLATE, identification	1	
–45	ST22N	S2801	. . SWITCH, toggle	1	
–46	1924–2	—	. . WASHER, lock (Att. Pt.) (Shakeproof)	1	
–47	M7478617P1	—	. . KNOB	2	
–48	Coml	—	. . SCREW, set: Bristo six-spline drive; headless; steel, cad pl; No. 8–32; 1/4 in lg; cup point (Att. Pt.) (Bristolco)	4	
–49	M7467488P2	—	. . KNOB	1	
–50	Coml	—	. . SCREW, set: Bristo six-spline drive; headless; steel, cad pl; No. 8–32; 1/4 in lg; cup point (Att. Pt.) (Bristolco)	2	
–51	ML7476392G1	—	. . KNOB	1	
–52	Coml	—	. . SCREW, set: Bristo six-spline drive; headless; steel, cad pl; No. 8–32; 1/4 in lg; cup point (Att. Pt.) (Bristolco)	2	
–53	K7001078P1	—	. . SHAFT	2	
–53A	K7001077P2	—	. . SHAFT	1	
–54	K7001077P1	—	. . SHAFT	1	
–55	K7102063P1	—	. . BUSHING	4	
–56	AN936B616B	—	. . WASHER, lock: bronze, tinned; round, 3/8 in; shakeproof-type, tw ext teeth (Att. Pt.)	4	
–57	HCM–R	XF2801	. . HOLDER, fuse (Buss)	1	
–58	ABS5	F2801	. . FUSE, cartridge (Buss)	1	
–59	K7126649P7	—	. . DISK, indicator	1	
–60	801002–512	XI2801	. . LIGHT, indicator (Dialco)	1	
–61	Coml	I2801	. . LAMP, incandescent: Mazda 6S6, 115 v, 6 w	1	
–62	801002–511	XI2802	. . LIGHT, indicator (Dialco)	1	
	Coml	I2802	. . LAMP, incandescent: Mazda 6S6, 115 v, 6 w (Ref item 61)	1	
–63	NP136069	—	. . PLATE, identification	1	
–64	AN504C4R5	—	. . SCREW, self-tapping: Phillips drive; RH; SS; No. 4–40; 5/16 in lg (Att. Pt.)	4	
–65	NP125845R	—	. . PLATE, identification	1	
–66	Coml	—	. . SCREW, mach: slot drive; Bind H; brass, black oxidized; No. 4–40; 1/8 in lg (Att. Pt.) (Amer Screw)	2	
–67	P7772555P1	—	. . GUSSET	1	
–68	P7772555P2	—	. . GUSSET	1	
–69	AN520–10–6	—	. . SCREW, mach: slot drive; RH; steel, cad pl; No. 10–32; 3/8 in lg (Att. Pt. for items 67 and 68)	16	
–70	AN936B10B	—	. . WASHER, lock: bronze, tinned; round, No. 10; shakeproof-type, tw ext teeth (Att. Pt. for items 67 and 68)	16	
–71	AN345–10	—	. . NUT, hex: steel, cad pl; No. 10–32 (Att. Pt. for items 67 and 68)	16	
–72	ML7005399G1	—	. . PLATE, catch	1	
–73	K7003070P1	—	. . SCREW, mach (Att. Pt.)	1	
–74	AN936B10B	—	. . WASHER, lock: bronze, tinned; round, No. 10; shakeproof-type, tw ext teeth (Att. Pt.)	1	
–75	AN345–10	—	. . NUT, hex: steel, cad pl; No. 10–32 (Att. Pt.)	1	
–76	K7003069P1	—	. . SCREW, mach	2	
–77	AN936B6B	—	. . WASHER, lock: bronze, tinned; round, No. 6; shakeproof-type, tw ext teeth	2	
–78	AN340–6	—	. . NUT, hex: steel, cad pl; No. 6–32	2	
–79	NP137555C	—	. . PLATE, identification	1	
–80	AN504C4–5	—	. . SCREW, self tapping: slot drive; RH; SS; No. 4–40; 5/16 in lg (Att. Pt.)	4	
			FREQUENCY CONTROL UNIT		
23–	ML7353090G1	—	. . FREQUENCY CONTROL UNIT (See Figure 22–7 for next higher assembly)	Ref	
–1	T7664869P1	—	. . . GEAR CASE	1	
–2	NC1–12	B2801	. . . MOTOR, AC (See Figure 24 for breakdown) (Bodine Elec)	1	
–3	AN520–10R5	—	. . . SCREW, mach: Phillips drive; RH; steel, cad pl; No. 10–32; 5/16 in lg (Att. Pt.)	4	
–4	AN936B10B	—	. . . WASHER, lock: bronze, tinned; round, No. 10; shakeproof-type, tw ext teeth (Att. Pt.)	4	
–4A	Coml	—	. . . WASHER, flat: steel, cad pl; round, No. 10 (Att. Pt.) Wrought Washer)	4	
–5	FA75	—	. . . COUPLING, rigid (Boston Gear)	1	
–6	Coml	—	. . . SCREW, set, Bristo six-spline drive; headless; steel, cad pl; No. 8–32; 1/4 in lg; cup point (Att. Pt.) (Bristolco)	4	
–7	M7481917P1	E2802	. . . DAMPER	1	
–8	AN345–10	—	. . . NUT, hex: steel, cad pl; No. 10–32 (Att. Pt.)	2	
–9	AN936B10B	—	. . . WASHER, lock: bronze, tinned; round, No. 10; shakeproof-type, tw ext teeth (Att. Pt.)	2	
–10	AN960–10L	—	. . . WASHER, flat: steel, cad pl; No. 10 (Att. Pt.)	2	
–11	TH	—	. . . WORM, gear (Boston Gear)	1	
–12	M7472146P29	—	. . . PIN, grooved (Att. Pt.)	1	
–13	K7001719P1	—	. . . RING, retainer	1	
–14	K7000611P1	—	. . . SHAFT	1	
–15	K7882388P3	—	. . . BEARING, sleeve	2	
–16	M7481918P1	E2801	. . . MAGNET	1	

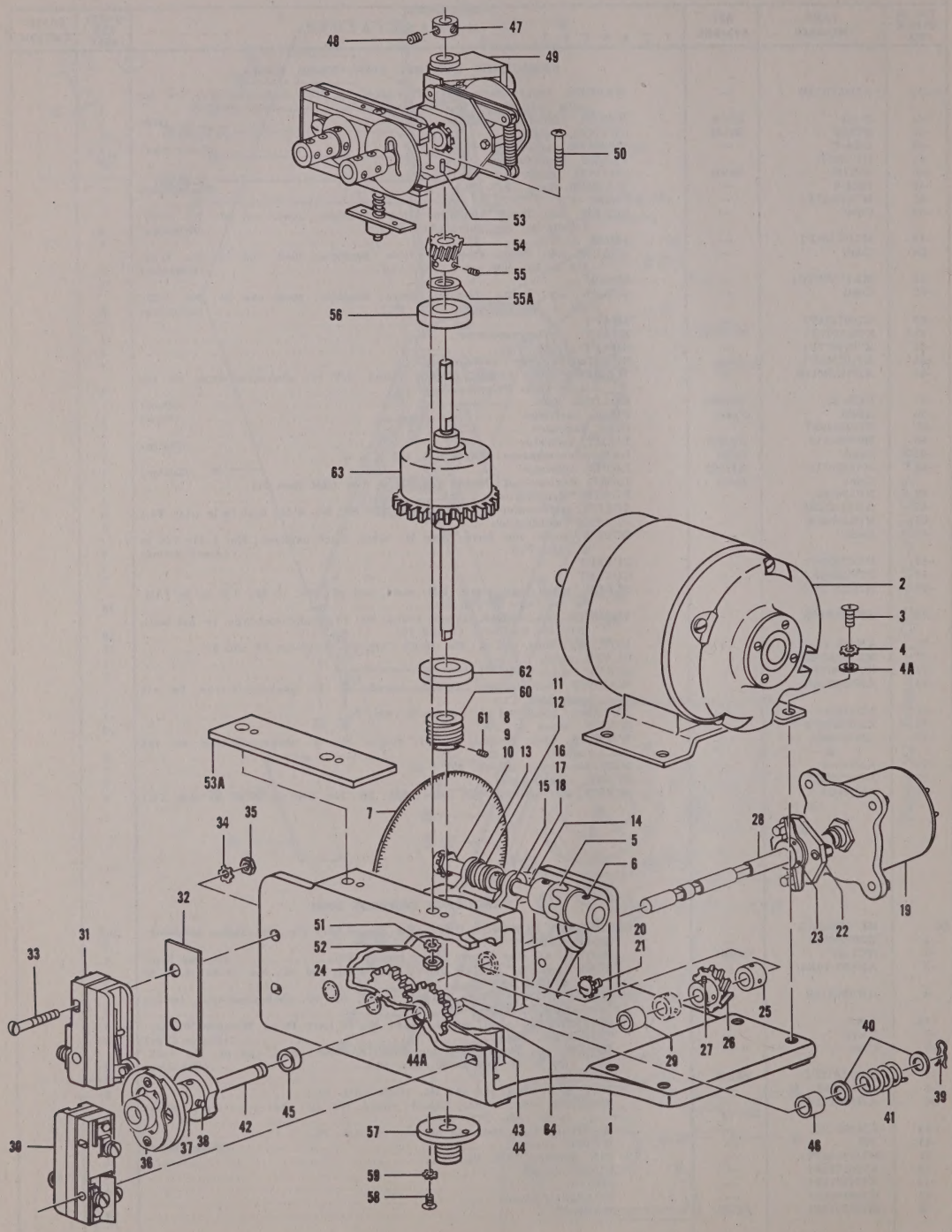

Figure 23. Frequency Control Unit

FIG. & INDEX NO.	PART NUMBER	REF SYMBOL	NOMENCLATURE 1 2 3 4 5 6 7	UNITS PER ASSY	APPLI-CATION
			FREQUENCY CONTROL UNIT (Cont)		
23–17	Coml	—	SCREW, mach: slot drive; RH; steel, cad pl; No. 10–30; 5/8 in lg (Att. Pt.) (Amer Screw)	1	
–18	AN936B10B	—	WASHER, lock: bronze, tinned; round, No. 10; shakeproof-type, tw ext teeth (Att. Pt.)	1	
–19	M7482686P1	R2801	RESISTOR, variable	1	
–20	AN515–6–10	—	SCREW, mach: slot drive; RH; steel, cad pl; No. 6–32; 5/8 in lg (Att. Pt.)	4	
–21	AN936B6B	—	WASHER, lock: bronze, tinned; round, No. 6; shakeproof-type, tw ext teeth (Att. Pt.)	4	
–22	K7119357P1	—	COUPLING, flexible	1	
–23	Coml	—	SCREW, set: Bristo six-spline drive; headless; steel, cad pl; No. 8–32; 1/4 in lg; cup point (Att. Pt.) (Bristolco)	4	
–24	G142	—	GEAR (Boston Gear)	1	
–25	K7000668P1	—	COLLAR, shaft	2	
–26	1020	—	GEAR (Boston Gear)	1	
–27	Coml	—	SCREW, set: Bristo six-spline drive; headless; steel, cad pl; No. 8–32; 1/4 in lg; cup point (Att. Pt. for items 24, 25 and 26) (Bristolco)	8	
–28	K7000612P1	—	SHAFT	1	
–29	P7772559P7	—	BEARING, sleeve	2	
–30	M7403217	S2803	SWITCH, sensitive	1	
–31	M7403217	S2804	SWITCH, sensitive	1	
–32	K7000610P1	—	PLATE, spacer	2	
–33	Coml	—	SCREW, mach: slot drive, Bind H; brass, cad pl; No. 6–32; 1-3/16 in lg (Att. Pt. for items 30, 31 and 32) (Amer Screw)	4	
–34	AN936B6B	—	WASHER, lock: bronze, tinned; round, No. 6; shakeproof-type, tw ext teeth (Att. Pt. for items 30, 31 and 32)	4	
–35	AN340–6	—	NUT, hex: steel, cad pl; No. 6–32 (Att. Pt. for items 30, 31 and 32)	4	
–36	K7124546P2	—	COUPLING, rigid	2	
–37	K7000618P1	—	CAM	2	
–38	Coml	—	SCREW, set: Bristo six-spline drive; headless; steel, cad pl; No. 8–32; 1/4 in lg; cup point (Att. Pt. for items 36 and 37) (Bristolco)	8	
–39	V2236852	—	CLIP (GE)	2	
–40	AN945–4P	—	WASHER, flat: steel, cad pl; 1/4 in	4	
–41	K7001062P1	—	SPRING	2	
–42	K7000612P1	—	SHAFT	2	
–43	G143	—	GEAR (Boston Gear)	2	
–44	Coml	—	SCREW, set: Bristo six-spline drive; headless; steel, cad pl; No. 8–32; 1/4 in lg; cup point (Att. Pt.) (Bristolco)	4	
–44A	Coml	—	WASHER, flat: steel, cad pl; round, 1/4 in (Wrought Washer)	2	
–45	P7772559P1	—	BEARING, sleeve	3	
–46	P7772559P7	—	BEARING, sleeve	2	
–47	K7000668P1	—	COLLAR, shaft	1	
–48	Coml	—	SCREW, set: Bristo six-spline drive; headless; steel, cad pl; No. 8–32; 1/4 in lg; cup point (Att. Pt.) (Bristolco)	2	
–49	ML7665282G1	—	GOVERNOR SUBASSEMBLY (See Figure 25 for breakdown)	1	
–50	AN520–10R12	—	SCREW, mach: Phillips drive; RH; steel, cad pl; No. 10–32; 3/4 in lg (Att. Pt.)	2	
–51	AN936B10B	—	WASHER, lock: bronze, tinned; round, No. 10; shakeproof-type, tw ext teeth (Att. Pt.)	2	
–52	AN345–10	—	NUT, hex: steel, cad pl; No. 10–32 (Att. Pt.)	2	
–53	K7000662P1	—	PIN, locating	2	
–53A	W7353090P50	—	SHIM	AR	
–54	M7483048P1	—	GEAR	1	
–55	Coml	—	SCREW, set: Bristo six-spline drive; headless; steel, cad pl; No. 8–32; 1/4 in lg; cup point (Att. Pt.) (Bristolco)	2	
–55A	K7004259P1	—	WASHER, flat	1	
–56	K7000474P2	—	BEARING, roller	1	
–57	K7001505P1	—	BUSHING	1	
–58	AN515–6–5	—	SCREW, mach: slot drive; RH; steel, cad pl; No. 6–32; 5/16 in lg (Att. Pt.)	3	
–59	AN936B6B	—	WASHER, lock: bronze tinned; round, No. 6; shakeproof-type, tw ext teeth (Att. Pt.)	3	
–60	LSH	—	WORM, gear (Boston Gear)	1	
–61	M7469288P27	—	PIN, grooved (Att. Pt.)	1	
–62	K7000474P2	—	BEARING, roller	1	
–63	M7403297P1	—	GEAR CASE	1	
–64	K7882388P3	—	BEARING, sleeve	1	

This information will be supplied at a later date.

Figure 24. AC Motor

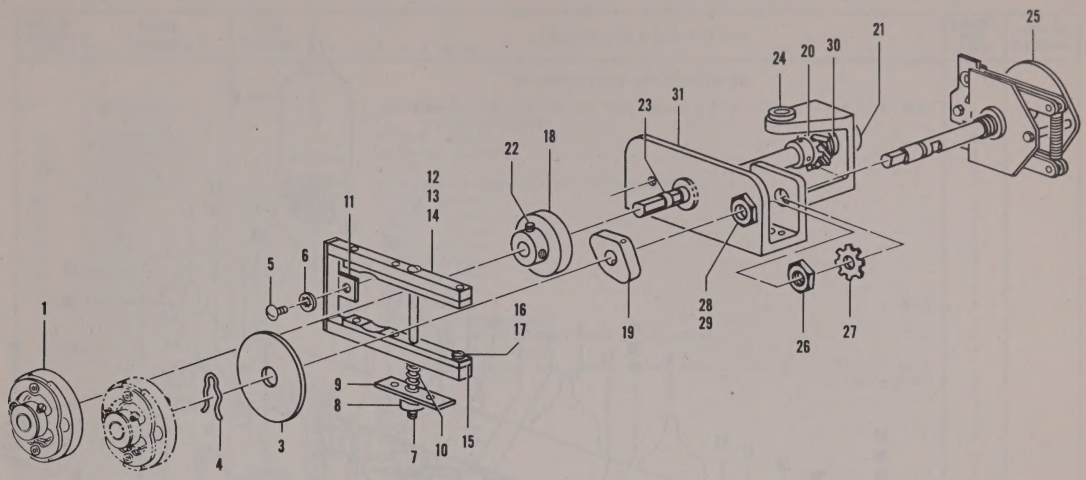

Figure 25. Governor Subassembly

FIG. & INDEX NO.	PART NUMBER	REF SYMBOL	1 2 3 4 5 6 7 NOMENCLATURE	UNITS PER ASSY	APPLI-CATION
			GOVERNOR SUBASSEMBLY		
25-	ML76665282G1	—	. . . GOVERNOR SUBASSEMBLY (See Figure 23-49 for next higher assembly)	Ref	
-1	K7124546P2	—	. . . . COUPLING, flexible	2	
✦					
-3	K7000614P1	—	. . . . DISK, retainer	1	
-4	V2236852	—	. . . . CLIP (GE)	1	
	ML7665282G1	—	. . . . BRAKE UNIT	1	
-5	AN515-8-4	—	. . . . SCREW, mach: slot drive; RH; steel, cad pl; No. 8-32; 1/4 in lg (Att. Pt.)	1	
-6	AN936A8B	—	. . . . WASHER, lock: bronze, tinned; round, No. 8; shakeproof-type, tw int teeth (Att. Pt.)	1	
-7	K7129130P1	—	. . . . . SCREW, mach: slot drive; RH; steel, cad pl; No. 6-32; 1/4 in lg (Att. Pt.)	1	
-8	K7870003P1	—	. . . . . NUT, anchor	1	
-9	K7129131P1	—	. . . . . PLATE, retainer	1	
-10	K7001059P1	—	. . . . . SPRING	1	
-11	K7129129P1	—	. . . . . SUPPORT, brake release	1	
-12	K7129128P1	—	. . . . . HOLDER, arm	2	
-13	AN515-6-4	—	. . . . . SCREW, mach: slot drive; RH; steel, cad pl; No. 6-32; 1/4 in lg (Att. Pt.)	2	
-14	AN936A6B	—	. . . . . WASHER, lock: bronze, tinned; round, No. 6; shakeproof-type, tw int teeth (Att. Pt.)	2	
-15	K7129132P1	—	. . . . . SHOE, brake	2	
-16	AN515-4-6	—	. . . . . SCREW, mach: slot drive; RH; steel, cad pl; No. 4-40; 3/8 in lg (Att. Pt.)	6	
-17	AN936A4B	—	. . . . . WASHER, lock: bronze, tinned; round, No. 4; shakeproof-type, tw int teeth (Att. Pt.)	6	
-18	K7000613P1	—	. . . . DRUM, brake	1	
-19	K7000616P1	—	. . . . CAM	1	
-20	M7483048P1	—	. . . . GEAR	1	
-21	K7000668P1	—	. . . . COLLAR, shaft	1	
-22	Coml	—	. . . . SCREW, set: Bristo six-spline drive; headless; steel, cad pl; No. 8-32; 1/4 in lg; cup point (Att. Pt. for items 18 thru 21) (Bristolco)	8	
-23	K7000617P2	—	. . . . SHAFT	1	
-24	P7772559P3	—	. . . . BEARING, sleeve	2	
-25	M7481919P1	S2805	. . . . SWITCH, rotary	1	
-26	K7870535	—	. . . . NUT, hex (Att. Pt.)	1	
-27	AN936B616B	—	. . . . WASHER, lock: bronze, tinned; round, 3/8 in; shakeproof-type, tw ext teeth (Att. Pt.)	1	
-28	K7102063P1	—	. . . . BEARING, sleeve	1	
-29	AN936B616B	—	. . . . WASHER, lock: bronze, tinned; round, 3/8 in; shakeproof-type, tw ext teeth (Att. Pt.)	1	
-30	P7772559P3	—	. . . . BEARING, sleeve	1	
-31	P7772563P1	—	. . . . SUPPORT, shaft	1	

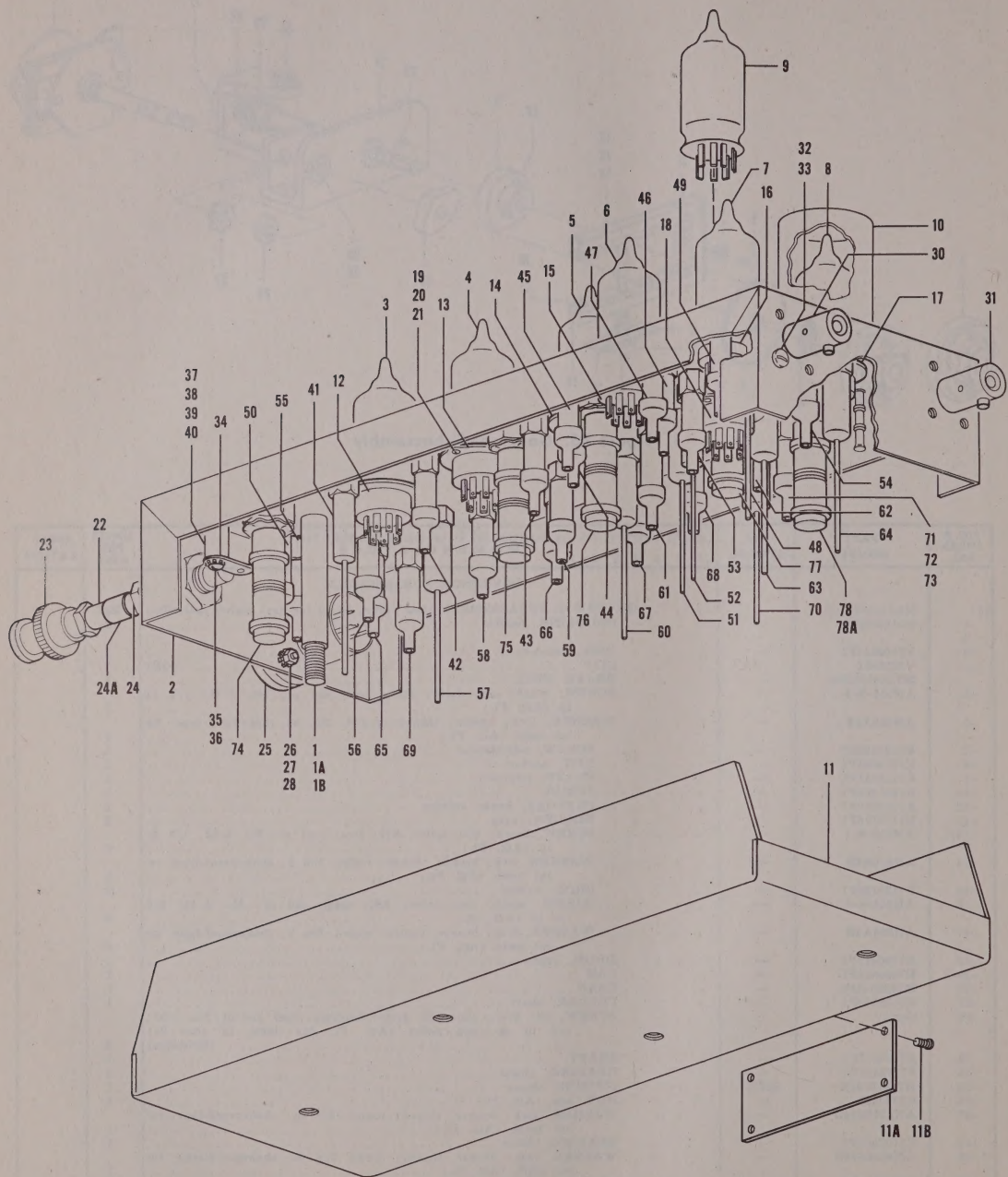

Figure 26. IF Amplifier AM–304/CPS–6B, Bottom-Front View (Sheet 1 of 2 sheets, Index Nos. 1 thru 78A)

FIG. & INDEX NO.	PART NUMBER	REF SYMBOL	NOMENCLATURE 1 2 3 4 5 6 7	UNITS PER ASSY	APPLI-CATION
			IF AMPLIFIER AM–304/CPS–6B		
26–	ML7664491G1	—	. IF AMPLIFIER AM–304/CPS–6B (See Figure 2–9, 3–9, 4–11, 5 and 6 for next higher assembly)	Ref	
–1	K7128230P2	—	. . SCREW, captive	4	
–1A	M7403661P18	—	. . SLEEVE, insulating	4	
–1B	A7010321P1	—	. . BUSHING	4	
–2	No Number	—	. . CHASSIS (W7664491P5 and P7 assembled)	1	
–3	6AK5	V101	. . TUBE, electron	1	
–4	6AK5	V102	. . TUBE, electron	1	
–5	6AK5	V103	. . TUBE, electron	1	
–6	6AK5	V105	. . TUBE, electron	1	
–7	6AK5	V107	. . TUBE, electron	1	
–8	6AK5	V106	. . TUBE, electron	1	
–9	6AK5	V104	. . TUBE, electron	1	
–10	7798	—	. . SHIELD, tube (Eby)	7	
	ML7481825G1	—	. . COVER SUBASSEMBLY	1	
–11	No Number	—	. . . COVER (M7481825P2, P4 and P5 assembled)	1	
–11A	NP140022B	—	. . . PLATE, identification	1	
–11B	Coml	—	. . . SCREW, self-tapping: Phillips drive; Bind H; SS; No. 4–40; 3/16 in lg (Att. Pt.) (Shakeproof)	4	
–12	SO10M	XV101	. . SOCKET, tube	1	
–13	SO10M	XV102	. . SOCKET, tube	1	
–14	SO10M	XV103	. . SOCKET, tube	1	
–15	SO10M	XV105	. . SOCKET, tube	1	
–16	SO10M	XV107	. . SOCKET, tube	1	
–17	SO10M	XV106	. . SOCKET, tube	1	
–18	SO10M	XV104	. . SOCKET, tube	1	
–19	AN515-4-4	—	. . SCREW, mach: slot drive; RH; steel, cad pl; No. 4–40; 1/4 in lg (Att. Pt. for items 12 thru 18)	14	
–20	AN936B4B	—	. . WASHER, lock: bronze, tinned; round, No. 4; shakeproof-type, tw ext teeth (Att. Pt. for items 12 thru 18)	14	
–21	AN340–4	—	. . NUT, hex: steel, cad pl; No. 4–40 (Att. Pt. for items 12 thru 18)	14	
	ML7001063G1	W101	. . CABLE ASSEMBLY, RF	1	
–22	RG55/U	—	. . . CABLE, RF: 7 in lg	1	
–23	UG88/U	P2501	. . . CONNECTOR, plug	1	
–24	D102A	—	. . . HANGER, cable (Industrial Prod Co)	1	
–24A	NP140241A	—	. . . MARKER, cable	1	
–25	AN3102–14S5P	J103	. . CONNECTOR, receptacle	1	
–26	AN515–4–5	—	. . SCREW, mach: slot drive; RH; steel, cad pl; No. 4–40; 5/16 in lg (Att. Pt.)	4	
–27	AN936B4B	—	. . WASHER, lock: bronze, tinned; round, No. 4; shakeproof-type, tw ext teeth (Att. Pt.)	4	
–28	AN340–4	—	. . NUT, hex: steel, cad pl; No. 4–40 (Att. Pt.)	4	
✦					
–30	UG290/U	J102	. . CONNECTOR, receptacle	1	
–31	UG290/U	J101	. . CONNECTOR, receptacle	1	
–32	AN520–3–4	—	. . SCREW, mach: slot drive; RH; steel, cad pl; No. 3–56; 1/4 in lg (Att. Pt. for items 30 and 31)	8	
–33	1903	—	. . WASHER, lock (Att. Pt. for items 30 and 31) (Shakeproof)	8	
–34	K7878455P1	—	. . TERMINAL, lug	6	
–35	AN515–6–4	—	. SCREW, mach: slot drive; RH; steel, cad pl; No. 6–32; 1/4 in lg (Att. Pt.)	6	
–36	AN936B6B	—	. . WASHER, lock: bronze, tinned; round, No. 6; shakeproof-type, tw ext teeth (Att. Pt.)	6	
–37	M7462416P9	—	. . INSULATOR, standoff	6	
–38	AN515–6–4	—	. . WASHER, flat	6	
–39	AN515–6–4	—	. . SCREW, mach: slot drive; RH; steel, cad pl; No. 6–32; 1/4 in lg (Att. Pt. for items 37 and 38)	6	
–40	AN936B6B	—	. . WASHER, lock: bronze, tinned; round, No. 6; shakeproof-type, tw ext teeth (Att. Pt. for items 37 and 38)	6	
–41	K7124442P2	C140	. . CAPACITOR, fixed	1	
–42	K7001403P1	C139	. . CAPACITOR, fixed	1	
–43	K7001403P1	C138	. . CAPACITOR, fixed	1	
–44	K7001403P1	C124	. . CAPACITOR, fixed	1	
–45	K7001403P1	C137	. . CAPACITOR, fixed	1	
–46	K7001403P1	C130	. . CAPACITOR, fixed	1	
–47	K7001403P1	C134	. . CAPACITOR, fixed	1	
–48	K7124442P2	C128	. . CAPACITOR, fixed	1	
–49	K7001403P1	C131	. . CAPACITOR, fixed	1	
–50	K7001403P1	C103	. . CAPACITOR, fixed	1	
–51	K7124442P2	C136	. . CAPACITOR, fixed	1	
–52	K7124442P2	C123	. . CAPACITOR, fixed	1	
–53	K7001403P1	C121	. . CAPACITOR, fixed	1	
–54	K7001403P1	C125	. . CAPACITOR, fixed	1	
–55	K7001403P1	C101	. . CAPACITOR, fixed	1	
–56	K7001403P1	C102	. . CAPACITOR, fixed	1	
–57	K7124442P2	C105	. . CAPACITOR, fixed	1	
–58	K7001403P1	C108	. . CAPACITOR, fixed	1	
–59	K7124442P2	C111	. . CAPACITOR, fixed	1	
–60	K7124442P2	C115	. . CAPACITOR, fixed	1	
–61	K7001403P1	C113	. . CAPACITOR, fixed	1	
–62	K7001403P1	C120	. . CAPACITOR, fixed	1	
–63	K7124442P2	C135	. . CAPACITOR, fixed	1	
–64	K7124442P2	C126	. . CAPACITOR, fixed	1	

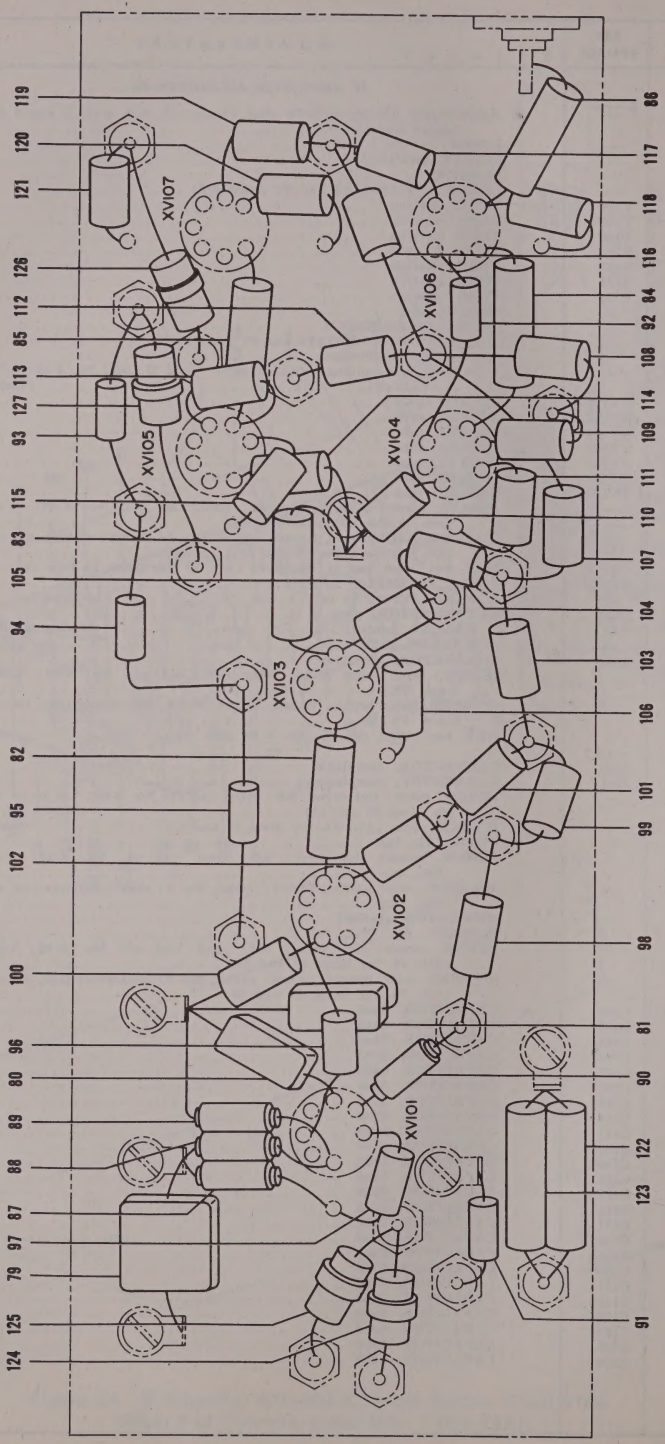

Figure 26. IF Amplifier AM–304/CPS–6B, Bottom View (Sheet 2 of 2 sheets, Index Nos. 79 thru 127)

FIG. & INDEX NO.	PART NUMBER	REF SYMBOL	NOMENCLATURE 1 2 3 4 5 6 7	UNITS PER ASSY	APPLI-CATION
			IF AMPLIFIER AM–304/CPS–6B (Cont)		
26–65	K7001403P1	C133	. . CAPACITOR, fixed	1	
–66	K7001403P1	C109	. . CAPACITOR, fixed	1	
–67	K7001403P1	C110	. . CAPACITOR, fixed	1	
–68	K7001403P1	C116	. . CAPACITOR, fixed	1	
–69	K7001403P1	C132	. . CAPACITOR, fixed	1	
–70	K7124442P2	C119	. . CAPACITOR, fixed	1	
–71	K7001403P1	C117	. . CAPACITOR, fixed	1	
–72	AN340–6	—	. . NUT, hex: steel, cad pl; No. 6–32 (Att. Pt. for items 41 thru 71)	31	
–73	AN936B6B	—	. . WASHER, lock: bronze, tinned; round, No. 6; shakeproof-type, tw ext teeth (Att. Pt. for items 41 thru 71)	31	
–74	ML7124633G1	L101	. . COIL, RF	1	
–75	ML7124633G2	L106	. . COIL, RF	1	
–76	ML7124633G1	L107	. . COIL, RF	1	
–77	ML7124633G2	L109	. . COIL, RF	1	
–78	ML7124633G2	L108	. . COIL, RF	1	
–78A	AN936A416	—	. . WASHER, lock: steel, cad pl; round, 1/4 in; shakeproof-type, tw int teeth (Att. Pt. for items 74 thru 78)	5	
–79	CM30D102J	C104	. . CAPACITOR, fixed	1	
–80	CM20D471J	C106	. . CAPACITOR, fixed	1	
–81	CM20D471J	C107	. . CAPACITOR, fixed	1	
–82	CC26UK101J	C112	. . CAPACITOR, fixed	1	
–83	CC26UK101J	C114	. . CAPACITOR, fixed	1	
–84	CC26UK101J	C118	. . CAPACITOR, fixed	1	
–85	CC26UK101J	C122	. . CAPACITOR, fixed	1	
–86	CC26UK101J	C127	. . CAPACITOR, fixed	1	
–87	ML7481012G4	L102	. . COIL, RF	1	
–88	ML7481012G10	L103	. . COIL, RF	1	
–89	ML7481012G7	L104	. . COIL, RF	1	
–90	ML7481012G5	L105	. . COIL, RF	1	
–91	7475057	L110	. . REACTOR (GE)	1	
–92	7475057	L111	. . REACTOR (GE)	1	
–93	7475057	L112	. . REACTOR (GE)	1	
–94	7475057	L113	. . REACTOR (GE)	1	
–95	7475057	L114	. . REACTOR (GE)	1	
–96	7475057	L115	. . REACTOR (GE)	1	
–97	P7770419P143	R101	. . RESISTOR, fixed	1	
–98	P7770419P147	R102	. . RESISTOR, fixed	1	
–99	P7770419P143	R103	. . RESISTOR, fixed	1	
–100	P7770419P147	R104	. . RESISTOR, fixed	1	
–101	P7770419P143	R105	. . RESISTOR, fixed	1	
–102	P7770419P163	R106	. . RESISTOR, fixed	1	
–103	P7770419P139	R107	. . RESISTOR, fixed	1	
–104	P7770419P143	R108	. . RESISTOR, fixed	1	
–105	P7770419P163	R109	. . RESISTOR, fixed	1	
–106	P7770419P143	R110	. . RESISTOR, fixed	1	
–107	P7770419P139	R111	. . RESISTOR, fixed	1	
–108	P7770419P139	R112	. . RESISTOR, fixed	1	
–109	P7770419P167	R113	. . RESISTOR, fixed	1	
–110	P7770419P111	R114	. . RESISTOR, fixed	1	
–111	P7770419P143	R115	. . RESISTOR, fixed	1	
–112	P7770419P139	R116	. . RESISTOR, fixed	1	
–113	P7770419P167	R117	. . RESISTOR, fixed	1	
–114	P7770419P111	R118	. . RESISTOR, fixed	1	
–115	P7770419P143	R119	. . RESISTOR, fixed	1	
–116	P7770419P139	R120	. . RESISTOR, fixed	1	
–117	P7770419P143	R121	. . RESISTOR, fixed	1	
–118	P7770419P139	R122	. . RESISTOR, fixed	1	
–119	P7770419P143	R123	. . RESISTOR, fixed	1	
–120	P7770419P163	R124	. . RESISTOR, fixed	1	
–121	P7770419P171	R125	. . RESISTOR, fixed	1	
–122	RC40BF681J	R126	. . RESISTOR, fixed	1	
–123	RC40BF681J	R127	. . RESISTOR, fixed	1	
–124	ML7128210G1	Z101	. . FILTER, low pass	1	
–125	ML7128210G1	Z102	. . FILTER, low pass	1	
–126	ML7128210G1	Z103	. . FILTER, low pass	1	
–127	ML7128210G1	Z104	. . FILTER, low pass	1	
			POWER SUPPLY PP–460/CPS–6B		
27–	ML7664492G1	—	. POWER SUPPLY PP–460/CPS–6B (See Figures 2–10, 3–10, 4–12, 5, 6 and 101–223 for next higher assembly)	Ref	
–1	No Number	—	. . CHASSIS (T7664492P25 and P33 assembled)	1	
–2	ML7771873G1	—	. . COVER	1	
–3	AN515–6–6	—	. . SCREW, mach: slot drive; RH; steel, cad pl; No. 6–32; 3/8 in lg (Att. Pt.)	5	
–4	AN936B6B	—	. . WASHER, lock: bronze, tinned; round, No. 6; shakeproof-type, tw ext teeth (Att. Pt.)	5	
–5	ML7460330G4	S3501	. . SWITCH, interlock	1	
–6	AN515–6–10	—	. . SCREW, mach: slot drive; RH; steel, cad pl; No. 6–32; 5/8 in lg (Att. Pt.)	2	
–7	AN936B6B	—	. . WASHER, lock: bronze, tinned; round, No. 6; shakeproof-type, tw ext teeth (Att. Pt.)	2	

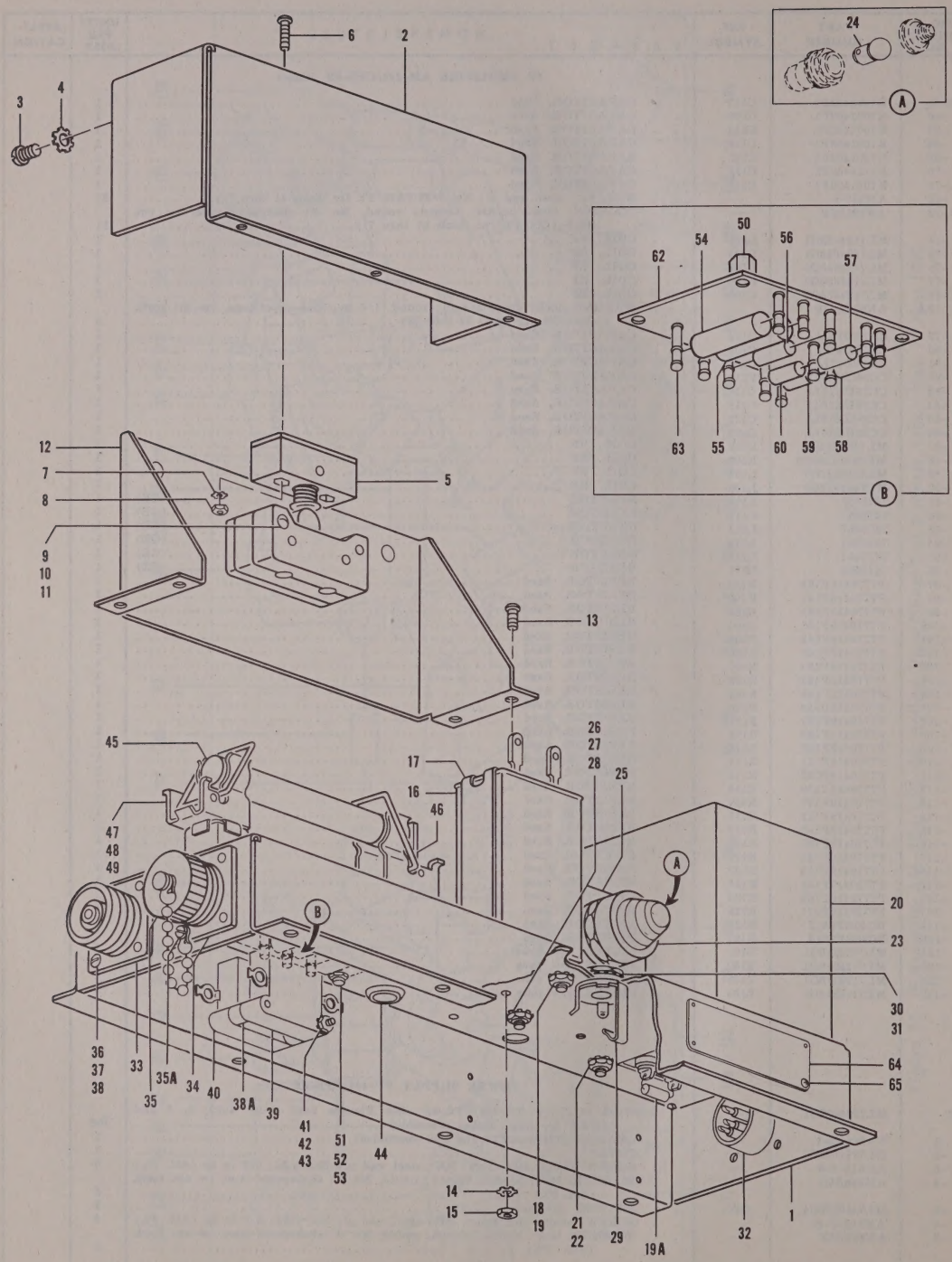

Figure 27. Power Supply PP–460/CPS–6B

FIG. & INDEX NO.	PART NUMBER	REF SYMBOL	NOMENCLATURE 1 2 3 4 5 6 7	UNITS PER ASSY	APPLI-CATION
			POWER SUPPLY PP-460/CPS-6B (Cont)		
27-8	AN340-6	—	. . NUT, hex: steel, cad pl; No. 6-32 (Att. Pt.)	2	
-9	AN515-6-18	—	. . SCREW, mach: slot drive; RH; steel, cad pl; No. 6-32; 1-1/8 in lg (Att. Pt.)	2	
-10	AN936B6B	—	. . WASHER, lock: bronze, tinned; round, No. 6; shakeproof-type, tw ext teeth (Att. Pt.)	2	
-11	AN340-6	—	. . NUT, hex: steel, cad pl; No. 6-32 (Att. Pt.)	2	
-12	M7481974P1	—	. . BRACKET	1	
-13	AN515-6-6	—	. . SCREW, mach: slot drive; RH; steel, cad pl; No. 6-32; 3/8 in lg (Att. Pt.)	4	
-14	AN936B6B	—	. . WASHER, lock: bronze, tinned; round, No. 6; shakeproof-type, tw ext teeth (Att. Pt.)	4	
-15	AN340-6	—	. . NUT, hex: steel, cad pl; No. 6-32 (Att. Pt.)	4	
-16	CP70B1FH504K	C3501	. . CAPACITOR, fixed	1	
-17	CPO7SA3	—	. . CLAMP (Att. Pt.)	2	
-18	AN345-10	—	. . NUT, hex: steel, cad pl; No. 10-32 (Att. Pt.)	2	
-19	AN936B10B	—	. . WASHER, lock: bronze, tinned; round, No. 10; shakeproof-type, tw ext teeth (Att. Pt.)	2	
-19A	RC30BF472J	R3508	. . RESISTOR, fixed	1	
-20	7480477	T3501	. . TRANSFORMER, power (GE)	1	
-21	AN340-8	—	. . NUT, hex: steel, cad pl; No. 8-32 (Att. Pt.)	4	
-22	AN936B8B	—	. . WASHER, lock: bronze, tinned; round, No. 8; shakeproof-type, tw ext teeth (Att. Pt.)	4	
-23	801006-511	XI3501	. . LIGHT, indicator (Dialco)	1	
-24	Coml	I3501	. . LAMP, incandescent: Mazda 64, 6 v, 4-3/8 w	1	
-25	K7129240P1	—	. . BRACKET	1	
-26	AN515-6-6	—	. . SCREW, mach: slot drive; RH; steel, cad pl; No. 6-32; 3/8 in lg (Att. Pt.)	2	
-27	AN936B6B	—	. . WASHER, lock: bronze, tinned; round, No. 6; shakeproof-type, tw ext teeth (Att. Pt.)	2	
-28	AN340-6	—	. . NUT, hex: steel, cad pl; No. 6-32 (Att. Pt.)	2	
-29	K7109613P3	J3504	. . CONNECTOR, receptacle	1	
-30	K7870535	—	. . NUT, hex (Att. Pt.)	1	
-31	AN936B616	—	. . WASHER, lock: steel, cad pl; round, 3/8 in; shakeproof-type, tw ext teeth (Att. Pt.)	1	
-32	AN3102-16-10P	J3501	. . CONNECTOR, receptacle	1	
-33	AN3102-18-16S	J3502	. . CONNECTOR, receptacle	1	
-34	AN3102-18-16S	J3503	. . CONNECTOR, receptacle	1	
-35	9760-18	—	. . CAP (Amphenol)	1	
-35A	AN515-4-6	—	. . SCREW, mach: slot drive; RH; steel, cad pl; No. 4-40; 3/8 in lg (Att. Pt. for items 34 and 35)	1	
-36	AN515-4-5	—	. . SCREW, mach: slot drive; RH; steel, cad pl; No. 4-40; 5/16 in lg (Att. Pt. for items 32, 33 and 34)	11	
-37	AN936B4B	—	. . WASHER, lock: bronze, tinned; round, No. 4; shakeproof-type, tw ext teeth (Att. Pt. for items 32 thru 35)	12	
-38	AN340-4	—	. . NUT, hex: steel, cad pl; No. 4-40 (Att. Pt. for items 32 thru 35)	12	
-38A	T7664492P36	—	. . WASHER, flat	2	
-39	CM50B222K	C3502	. . CAPACITOR, fixed	1	
-40	CM50B222K	C3503	. . CAPACITOR, fixed	1	
-41	Coml	—	. . SCREW, mach: Phillips drive; RH; steel, cad pl; No. 6-32; 1-3/8 in lg (Att. Pt. for items 38A, 39 and 40) (Amer Screw)	2	
-42	AN936B6B	—	. . WASHER, lock: bronze, tinned; round, No. 6; shakeproof-type, tw ext teeth (Att. Pt. for items 38A, 39 and 40)	2	
-43	AN340-6	—	. . NUT, hex: steel, cad pl; No. 6-32 (Att. Pt. for items 38A, 39 and 40)	2	
-44	M2R53P4	—	. . GROMMET	2	
-45	123D1726	CR3501	. . RECTIFIER, metallic (Fed Tele & Rad)	1	
-46	K7126646P1	—	. . BRACKET	1	
-47	ML7770257G3	—	. . CLIP SET	1	
-48	AN520-10-6	—	. . SCREW, mach: slot drive; RH; steel, cad pl; No. 10-32; 3/8 in lg (Att. Pt.)	2	
-49	AN936B10B	—	. . WASHER, lock: bronze, tinned; round, No. 10; shakeproof-type, tw ext teeth (Att. Pt.)	2	
-50	T7664492P27	—	. . POST, spacing	4	
	ML7129257G1	—	. . RESISTOR ASSEMBLY, fixed	1	
-51	AN515-8-12	—	. . SCREW, mach: slot drive; RH; steel, cad pl; No. 8-32; 3/4 in lg (Att. Pt. for ML7129257G1 and item 50)	4	
-52	AN936B8B	—	. . WASHER, lock: bronze, tinned; round, No. 8; shakeproof-type, tw ext teeth (Att. Pt. for ML7129257G1 and item 50)	4	
-53	AN340-8	—	. . NUT, hex: steel, cad pl; No. 8-32 (Att. Pt. for ML7129257G1 and item 50)	4	
-54	RC40BF474J	R3503	. . . RESISTOR, fixed	1	
-55	RC40BF474J	R3502	. . . RESISTOR, fixed	1	
-56	RC30BF224J	R3501	. . . RESISTOR, fixed	1	
-57	RC20BF105J	R3504	. . . RESISTOR, fixed	1	
-58	RC20BF105J	R3506	. . . RESISTOR, fixed	1	
-59	RC20BF105J	R3507	. . . RESISTOR, fixed	1	
-60	RC20BF105J	R3505	. . . RESISTOR, fixed	1	
✦					
	ML7003676G1	—	. . . BOARD, terminal	1	
-62	K7129247P2	—	. . . . PANEL	1	
-63	T100-3	—	. . . . . TERMINAL, stud (Bead Chain)	14	
-64	NP140019A	—	. . PLATE, identification	1	
-65	AN504C4R4	—	. . SCREW, self-tapping: Phillips drive; RH; SS; No. 4-40; 1/4 in lg (Att. Pt.)	4	

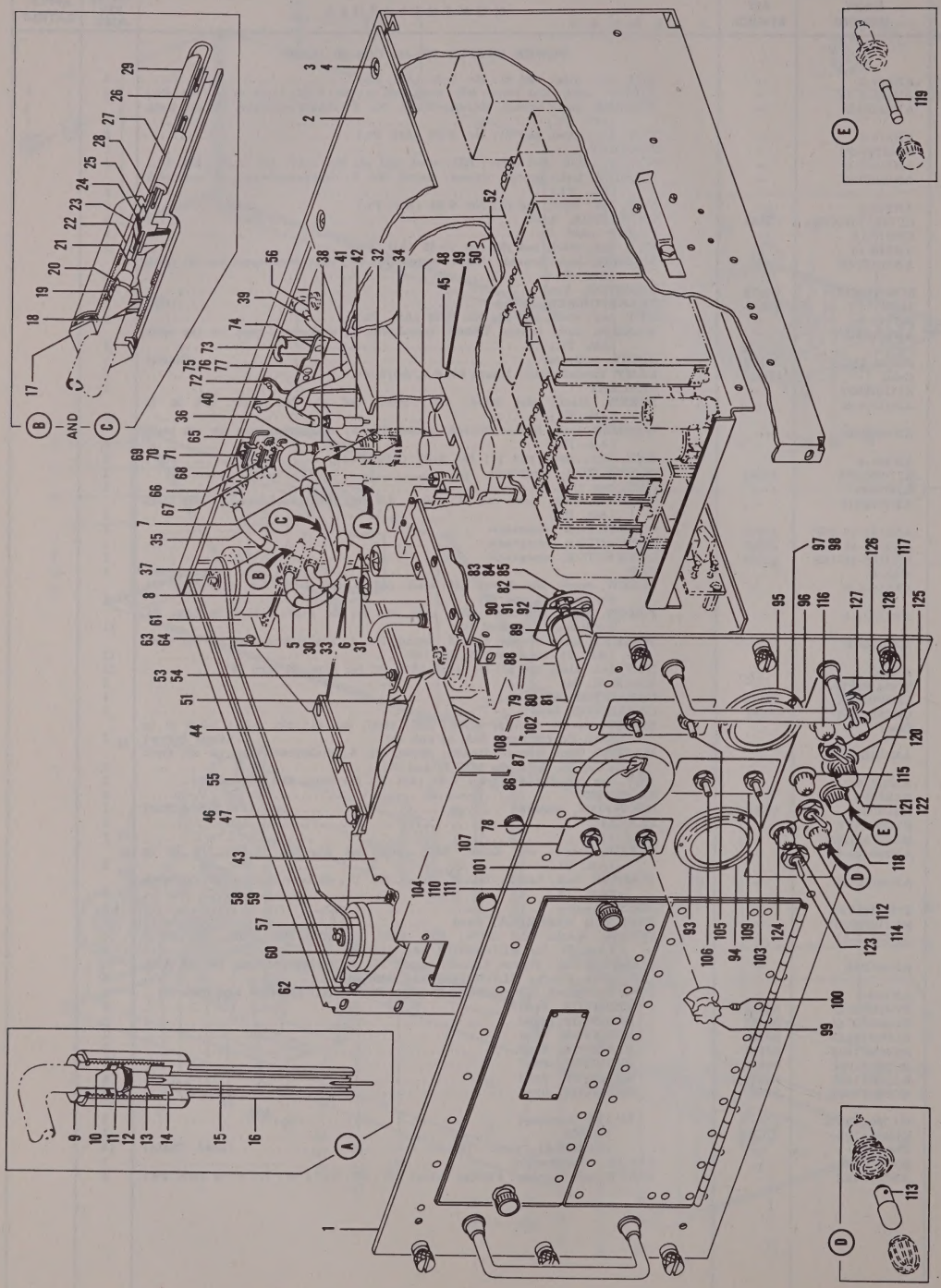

Figure 28. RF Oscillator O–94/CPS–6B, Front View (Sheet 1 of 4 sheets, Index Nos. 1 thru 128)

FIG. & INDEX NO.	PART NUMBER	REF SYMBOL	1 2 3 4 5 6 7 NOMENCLATURE	UNITS PER ASSY	APPLI-CATION
			RF OSCILLATOR O–94/CPS–6B		
28–	ML7354003G1	—	. RF OSCILLATOR O–94/CPS–6B (See Figures 2–14, 3–14, 4–16, 5 and 6 for next higher assembly)	Ref	
–1	ML7354033G1	—	. . CHASSIS (See Figure 29 for breakdown)	1	
–2	P7700896P1	—	. . COVER	1	
–3	AN515–6–6	—	. . SCREW, mach: slot drive; RH; steel, cad pl; No. 6–32; 3/8 in lg (Att. Pt.)	6	
–4	AN936B6B	—	. . WASHER, lock: bronze, tinned; round, No. 6; shakeproof-type, tw ext teeth (Att. Pt.)	6	
	ML7400981G1	W704	. . CABLE ASSEMBLY, RF	1	
–5	RG55/U	—	. . . CABLE, RF: 10 in lg	1	
–6	NP136186L	—	. . . MARKER, cable	1	
–7	NP137425D	—	. . . MARKER, cable	1	
–8	NP136187D1	—	. . . MARKER, cable	1	
	ML7700324G1	P710	. . . PROBE, RF	1	
–9	K7000218P1	—	. . . . NUT, lock	1	
–10	K7000213P1	—	. . . . WASHER, flat	1	
–11	K7000217P1	—	. . . . GASKET	1	
–12	K7000216P1	—	. . . . WASHER, cup	1	
–13	K7000211P1	—	. . . . NUT, round	1	
–14	K7000210P1	—	. . . . INSULATOR, bushing	1	
–15	K7000220P1	—	. . . . LINE SECTION, RF transmission	1	
–16	ML7000219G1	—	. . . . PROBE SUBASSEMBLY, RF	1	
	ML7700878G1	E705	. . . PROBE, RF	1	
–17	K7003938P1	—	. . . . NUT, lock	1	
–18	K7003937P1	—	. . . . WASHER, flat	2	
–19	K7003936P1	—	. . . . GASKET	1	
–20	K7000216P1	—	. . . . WASHER, cup	1	
–21	K7003737P1	—	. . . . TERMINAL, cable	1	
–22	K7003736P1	—	. . . . NUT, round	1	
–23	K7003738P1	—	. . . . DISK, retainer	1	
–24	K7103858P1	R778	. . . . RESISTOR, fixed	1	
–25	K7003738P2	—	. . . . DISK, retainer	1	
–26	K7003735P2	—	. . . . LINE SECTION, RF transmission	1	
–27	P7770419P135	R779	. . . . RESISTOR, fixed	1	
–28	K7003735P2	—	. . . . LINE SECTION, RF transmission	1	
–29	ML7403883G1	—	. . . . PROBE SUBASSEMBLY, RF	1	
	ML7400981G2	W707	. . CABLE ASSEMBLY, RF	1	
–30	RG55/U	—	. . . CABLE, RF: 10 in lg	1	
–31	NP136186P	—	. . . MARKER, cable	1	
–32	NP137425F	—	. . . MARKER, cable	1	
–33	NP136187E1	—	. . . MARKER, cable	1	
–34	ML7700324G1	P713	. . . PROBE, RF (Ref items 9 thru 16 for breakdown)	1	
	ML7700878G2	E706	. . . PROBE, RF (See Detail C)	1	
	K7103858P1	R780	. . . . RESISTOR, fixed (Ref item 24)	1	
	P7770419P135	R781	. . . . RESISTOR, fixed (Ref item 27)	1	
			NOTE: For additional breakdown, refer to items 17 thru 23, 25, 26, 28 and 29.		
	ML7400982G1	W705	. . CABLE ASSEMBLY, RF	1	
–35	RG55/U	—	. . . CABLE, RF: 8 in lg	1	
–36	NP137425E	—	. . . MARKER, cable	1	
–37	NP136186M	—	. . . MARKER, cable	1	
–38	ML7700324G1	P712	. . . PROBE, RF (Ref items 9 thru 16 for breakdown)	1	
	ML7400982G2	W706	. . CABLE ASSEMBLY, RF	1	
–39	RG55/U	—	. . . CABLE, RF: 8 in lg	1	
–40	NP137425G	—	. . . MARKER, cable	1	
–41	NP136186N	—	. . . MARKER, cable	1	
–42	ML7700324G1	P714	. . . PROBE, RF (Ref items 9 thru 16 for breakdown)	1	
–43	ML7354024G1	E701	. . CAVITY ASSEMBLY, tuned (See Figure 30 for breakdown)	1	
–44	ML7700337G1	—	. . BRACKET	1	
–45	ML7700337G2	—	. . BRACKET	1	
–46	Coml	—	. . SCREW, mach: hex head; brass, cad pl; 5/16 in–24; 3/4 in lg (Att. Pt. for items 43, 44 and 45) (Amer Screw)	4	
–47	AN936B516B	—	. . WASHER, lock: bronze, tinned; round, 5/16 in; shakeproof-type, tw ext teeth (Att. Pt. for items 43, 44 and 45)	4	
–48	ML7354011G1	—	. . AMPLIFIER, DC (See Figure 31 for breakdown)	1	
–49	AN515–8–4	—	. . SCREW, mach: slot drive; RH; steel, cad pl; No. 8–32; 1/4 in lg (Att. Pt.)	6	
–50	AN936B8B	—	. . WASHER, lock: bronze, tinned; round, No. 8; shakeproof-type, tw ext teeth (Att. Pt.)	6	
–51	M7400853P1	—	. . BRACKET	1	
–52	M7400853P2	—	. . BRACKET	1	
–53	AN515–6–6	—	. . SCREW, mach: slot drive; RH; steel, cad pl; No. 6–32; 3/8 in lg (Att. Pt. for items 51 and 52)	4	
–54	AN936B6B	—	. . WASHER, lock: bronze, tinned; round, No. 6; shakeproof-type, tw ext teeth (Att. Pt. for items 51 and 52)	4	
–55	ML7666848G2	—	. . BRACKET	1	
–56	ML7666848G1	—	. . BRACKET	1	
–57	M112–7	—	. . MOUNT, vibration (LN Barry)	4	
–58	AN515–8–7	—	. . SCREW, mach: slot drive; RH; steel, cad pl; No. 8–32; 7/16 in lg (Att. Pt.)	16	
–59	AN936A8B	—	. . WASHER, lock: bronze, tinned; round, No. 8; shakeproof-type, tw int teeth (Att. Pt.)	16	
–60	ML7400965G2	—	. . BRACKET	2	
–61	ML7400965G1	—	. . BRACKET	2	
–62	AN515–8–6	—	. . SCREW, mach: slot drive; RH; steel, cad pl; No. 8–32; 3/8 in lg (Att. Pt. for item 60)	4	

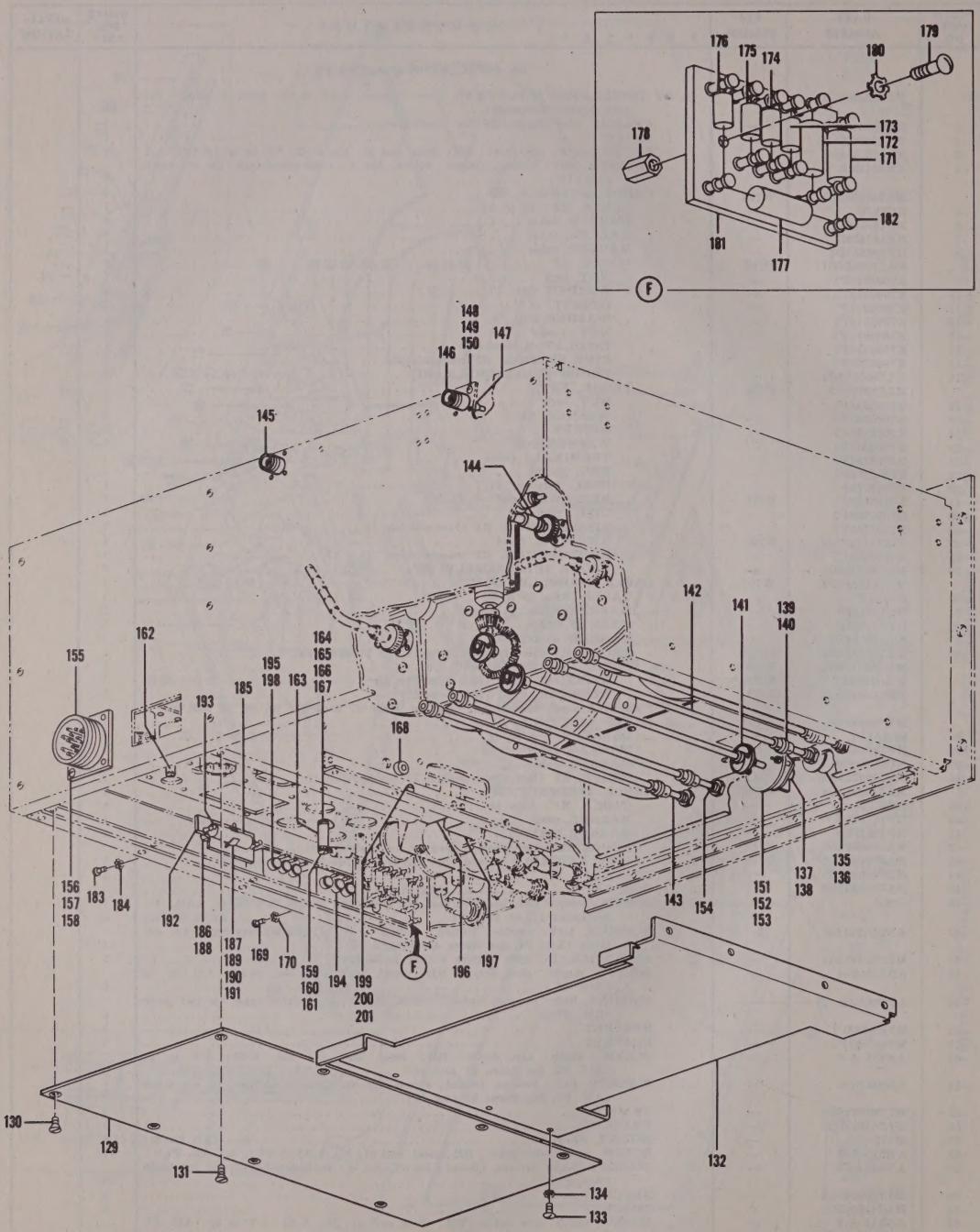

Figure 28. RF Oscillator O–94/CPS–6B, Bottom-Rear View (Sheet 2 of 4 sheets, Index Nos. 129 thru 201)

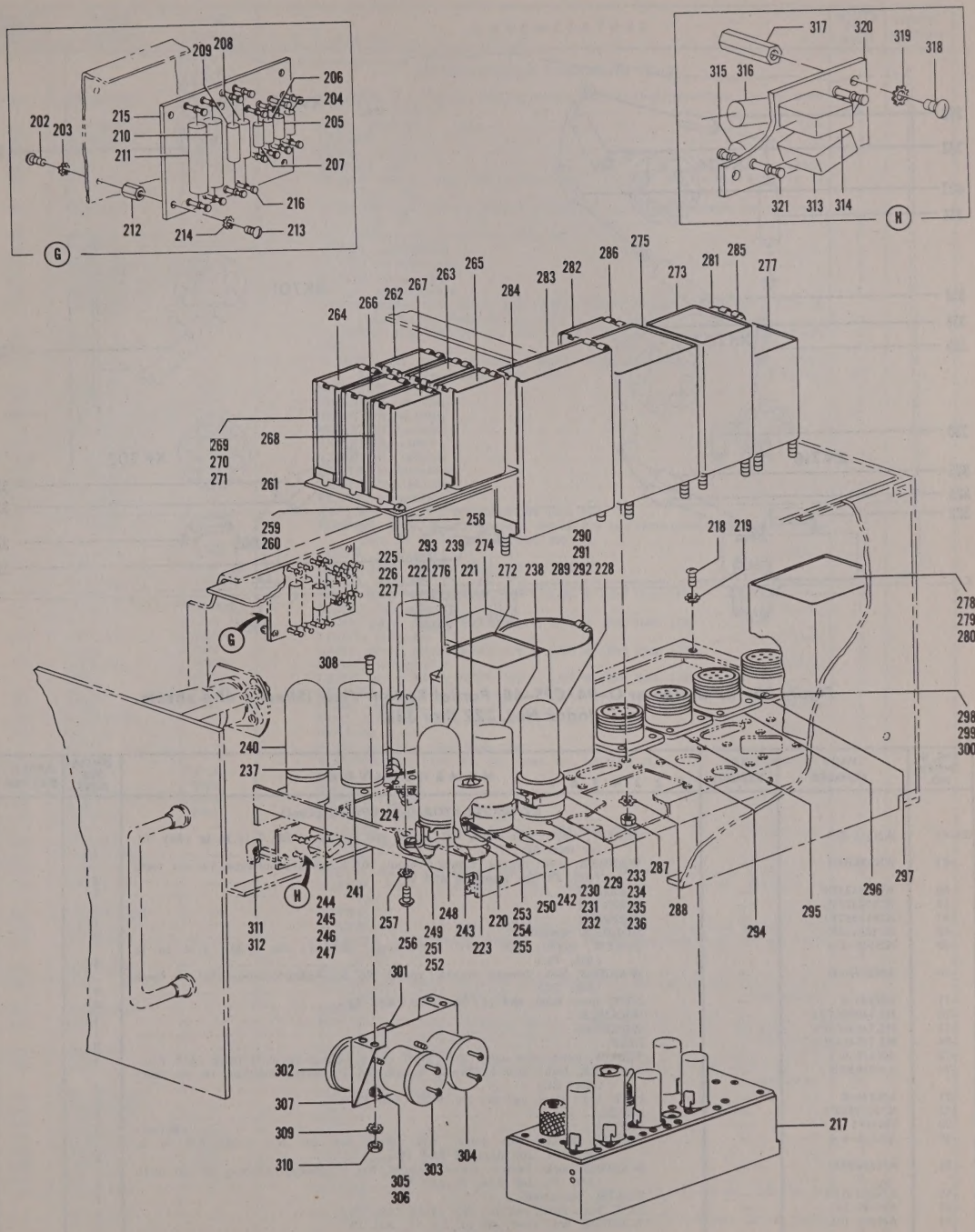

Figure 28. RF Oscillator O–94/CPS–6B, Partial Front View (Sheet 3 of 4 sheets, Index Nos. 202 thru 321)

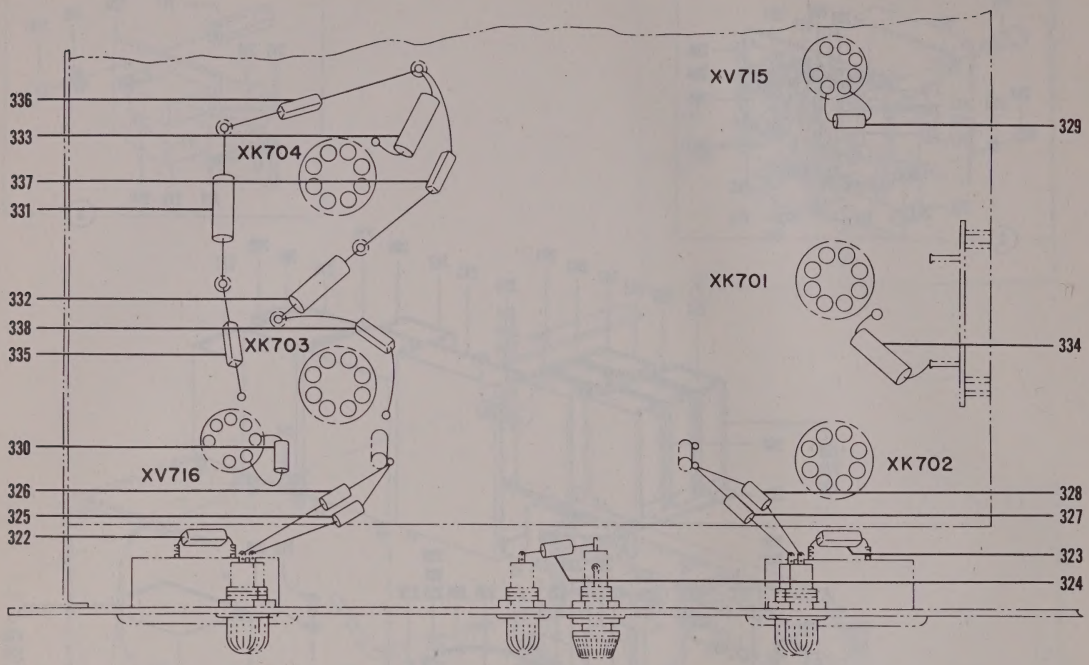

Figure 28. RF Oscillator O–94/CPS–6B, Partial Bottom View (Sheet 4 of 4 sheets, Index Nos. 322 thru 338)

FIG. & INDEX NO.	PART NUMBER	REF SYMBOL	1 2 3 4 5 6 7 NOMENCLATURE	UNITS PER ASSY	APPLI-CATION
			RF OSCILLATOR O–94/CPS–6B (Cont)		
28–63	AN515–8–7	—	. . SCREW, mach: slot drive, RH; steel, cad pl; No. 8–32; 7/16 in lg (Att. Pt. for item 61)	4	
–64	AN936B8B	—	. . WASHER, lock: bronze, tinned; round, No. 8; shakeproof-type, tw ext teeth (Att. Pt. for items 60 and 61)	8	
–65	K7876451P3	—	. . WRENCH	1	
–66	K7876451P1	—	. . WRENCH	1	
–67	K7871267P1	—	. . WRENCH	1	
–68	K7126174P1	—	. . HOLDER, wrench	3	
–69	AN515–4–5	—	. . SCREW, mach: slot drive; RH; steel, cad pl; No. 4–40; 5/16 in lg (Att. Pt.)	6	
–70	AN936B4B	—	. . WASHER, lock: bronze, tinned; round, No. 4; shakeproof-type, tw ext teeth (Att. Pt.)	6	
–71	AN340–4	—	. . NUT, hex: steel, cad pl; No. 4–40 (Att. Pt.)	6	
–72	ML7400961P1	—	. . WRENCH	1	
–73	ML7404464P1	—	. . WRENCH	1	
–74	ML7004242G1	—	. . CLIP	2	
–75	AN515–6–5	—	. . SCREW, mach: slot drive; RH; steel, cad pl; No. 6–32; 5/16 in lg (Att. Pt.)	4	
–76	AN936B6B	—	. . WASHER, lock: bronze, tinned; round, No. 6; shakeproof-type, tw ext teeth (Att. Pt.)	4	
–77	AN340–6	—	. . NUT, hex: steel, cad pl; No. 6–32 (Att. Pt.)	4	
–78	K7000260P1	—	. . BEZEL	1	
–79	80042–1	—	. . SHIELD, tube (Millen)	1	
–80	AN515–6–6	—	. . SCREW, mach: slot drive; RH; steel, cad pl; No. 6–32; 3/8 in lg (Att. Pt. for item 78 and 79)	4	
–81	AN936B6B	—	. . WASHER, lock: bronze, tinned; round, No. 6; shakeproof-type, tw ext teeth (Att. Pt. for item 78 and 79)	4	
–82	K7000381P1	—	. . PLATE, mounting	1	
–83	AN345–10	—	. . NUT, hex: steel, cad pl; No. 10–32 (Att. Pt.)	4	
–84	AN960–10L	—	. . WASHER, flat: steel, cad pl; No. 10 (Att. Pt.)	4	

FIG. & INDEX NO.	PART NUMBER	REF SYMBOL	1 2 3 4 5 6 7 NOMENCLATURE	UNITS PER ASSY	APPLI-CATION
			RF OSCILLATOR O–94/CPS–6B (Cont)		
28–85	AN936B10B	—	. . WASHER, lock: bronze, tinned; round, No. 10; shakeproof-type, tw ext teeth (Att. Pt.)	2	
–86	K7000305P1	—	. . DISK, window	1	
–87	K7000306P1	—	. . GASKET	1	
–88	2BP1	V717	. . TUBE, electron	1	
–89	9024	XV717	. . SOCKET, tube (Eby)	1	
–90	AN515–4–7	—	. . SCREW, mach: slot drive; RH; steel, cad pl; No. 4–40; 7/16 in lg (Att. Pt.)	2	
–91	AN936B4B	—	. . WASHER, lock: bronze, tinned; round, No. 4; shakeproof-type, tw ext teeth (Att. Pt.)	2	
–92	AN340–4	—	. . NUT, hex: steel, cad pl; No. 4–40 (Att. Pt.)	2	
–93	MR26W010DCVV	M702	. . METER, multimeter	1	
–94	NP136185B	—	. . PLATE, identification	1	
–95	MR26W002DCMA	M701	. . METER, multimeter	1	
–96	NP136185C	—	. . PLATE, identification	1	
–97	AN515B4–6	—	. . SCREW, mach: slot drive; RH; brass, black oxidized; No. 4–40; 3/8 in lg (Att. Pt. for items 93 thru 96)	6	
–98	1904	—	. . WASHER, lock (Att. Pt. for items 93 thru 96) (Shakeproof)	6	
–99	M7478617P1	—	. . KNOB	6	
–100	Coml	—	. . SCREW, set: Bristo six-spline drive; headless; steel, cad pl; No. 8–32; 3/16 in lg; cup point (Att. Pt.) (Bristolco)	12	
–101	P7768146P5	R774	. . RESISTOR, variable	1	
–102	P7768146P5	R773	. . RESISTOR, variable	1	
–103	RA30A2SD501AK	R746	. . RESISTOR, variable	1	
–104	P7770834P30	R771	. . RESISTOR, variable	1	
–105	P7770834P30	R770	. . RESISTOR, variable	1	
–106	P7770835P9	R765	. . RESISTOR, variable	1	
–107	NP136189	—	. . PLATE, identification	1	
–108	NP136188A	—	. . PLATE, identification	1	
–109	NP136188B	—	. . PLATE, identification	1	
–110	K7870535	—	. . NUT, hex (Att. Pt. for items 104 thru 109)	3	
–111	AN936A616B	—	. . WASHER, lock: bronze, tinned; round, 3/8 in; shakeproof-type, tw int teeth (Att. Pt. for items 104 thru 109)	3	
–112	53410–995	XI701	. . LIGHT, indicator (Dialco)	1	
–113	Coml	I701	. . LAMP, glow: Mazda NE51, 110 v, 1/25 w	1	
–114	53410–995	XI702	. . LIGHT, indicator (Dialco)	1	
	Coml	I702	. . LAMP, glow: Mazda NE51, 110 v, 1/25 w (Ref item 113)	1	
–115	53410–995	XI705	. . LIGHT, indicator (Dialco)	1	
	Coml	I705	. . LAMP, glow: Mazda NE51, 110 v, 1/25 w (Ref item 113)	1	
–116	53410–995	XI704	. . LIGHT, indicator (Dialco)	1	
	Coml	I704	. . LAMP, glow: Mazda NE51, 110 v, 1/25 w (Ref item 113)	1	
–117	53410–995	XI703	. . LIGHT, indicator (Dialco)	1	
	Coml	I703	. . LAMP, glow: Mazda NE51, 110 v, 1/25 w (Ref item 113)	1	
–118	HCM–R	XF701	. . HOLDER, fuse (Buss)	1	
–119	ABS2	F701	. . FUSE, cartridge (Buss)	1	
–120	K7126649P6	—	. . DISK, indicator	2	
–121	HCM–R	—	. . HOLDER, fuse (Buss)	1	
	ABS2	—	. . FUSE, cartridge (Ref item 119) (Buss)	1	
–122	1228–2	—	. . WASHER, lock (Att. Pt. for items 118, 120 and 121) (Shakeproof)	2	
–123	ST52S	S702	. . SWITCH, toggle	1	
–124	ST52N	S703	. . SWITCH, toggle	1	
–125	ST52N	S706	. . SWITCH, toggle	1	
–126	ST52S	S707	. . SWITCH, toggle	1	
–127	1222–1	—	. . WASHER, lock (Att. Pt. for items 123 thru 126) (Shakeproof)	4	
–128	NP136191	—	. . PLATE, identification	1	
–129	T7666833P1	—	. . COVER	1	
–130	AN505–8–6	—	. . SCREW, mach: slot drive; FH; steel, cad pl; No. 8–32; 3/8 in lg (Att. Pt.)	4	
–131	AN505–8–7	—	. . SCREW, mach: slot drive; FH; steel, cad pl; No. 8–32; 7/16 in lg (Att. Pt.)	4	
–132	ML7666846G1	—	. . COVER	1	
–133	AN515–8–7	—	. . SCREW, mach: slot drive; RH; steel, cad pl; No. 8–32; 7/16 in lg (Att. Pt.)	8	
–134	AN936B8B	—	. . WASHER, lock: bronze, tinned; round, No. 8; shakeproof-type, tw ext teeth (Att. Pt.)	8	
–135	M7478617P1	—	. . KNOB	4	
–136	Coml	—	. . SCREW, set: Bristo six-spline drive; headless; steel, cad pl; No. 8–32; 3/16 in lg; cup point (Att. Pt.) (Bristolco)	8	
–137	M7467488P3	—	. . KNOB	1	
–138	Coml	—	. . SCREW, set: Bristo six-spline drive; headless; steel, cad pl; No. 8–32; 1/8 in lg; cup point (Att. Pt.) (Bristolco)	2	
–139	SK1947–8	—	. . COUPLING, flexible (Lord)	8	
–140	Coml	—	. . SCREW, set: Bristo six-spline drive; headless; steel, cad pl; No. 6–32; 1/8 in lg (Att. Pt.) (Bristolco)	32	
–141	ML7463830G1	—	. . COUPLING, flexible	3	
–142	K7000382P2	—	. . SHAFT	5	
–143	K7000382P1	—	. . SHAFT	4	
–144	UG306/U	E707	. . CONNECTOR, adaptor	1	
–145	UG58/U	J715	. . CONNECTOR, receptacle	1	
–146	UG58/U	J711	. . CONNECTOR, receptacle	1	
–147	UG177/U	—	. . SHELL, connector	2	
–148	AN515–4–6	—	. . SCREW, mach: slot drive; RH; steel, cad pl; No. 4–40; 3/8 in lg (Att. Pt. for items 145, 146 and 147)	8	
–149	AN936B4B	—	. . WASHER, lock: bronze, tinned; round, No. 4; shakeproof-type, tw ext teeth (Att. Pt. for items 145, 146 and 147)	8	
–150	AN340–4	—	. . NUT, hex: steel, cad pl; No. 4–40 (Att. Pt. for items 145, 146 and 147)	8	
–151	K7001764P1	S701	. . SWITCH, rotary	1	

FIG. & INDEX NO.	PART NUMBER	REF SYMBOL	NOMENCLATURE 1 2 3 4 5 6 7	UNITS PER ASSY	APPLI-CATION
			RF OSCILLATOR O–94/CPS–6B (Cont)		
28–152	K7870535	—	. . NUT, hex (Att. Pt.)	1	
–153	AN936A616B	—	. . WASHER, lock: bronze, tinned; round, 3/8 in; shakeproof-type, tw int teeth (Att. Pt.)	1	
–154	K7102063P1	—	. . BUSHING	4	
–155	AN3102–28–2P	J719	. . CONNECTOR, receptacle	1	
–156	AN515–6–7	—	. . SCREW, mach: slot drive; RH; steel, cad pl; No. 6–32; 7/16 in lg (Att. Pt.)	4	
–157	AN936B6B	—	. . WASHER, lock: bronze, tinned; round, No. 6; shakeproof-type, tw ext teeth (Att. Pt.)	4	
–158	AN340–6	—	. . NUT, hex: steel, cad pl; No. 6–32 (Att. Pt.)	4	
–159	K7878455P1	—	. . TERMINAL, lug	8	
–160	AN515–6–4	—	. . SCREW, mach: slot drive; RH; steel, cad pl; No. 6–32; 1/4 in lg (Att. Pt.)	8	
–161	AN936B6B	—	. . WASHER, lock: bronze, tinned; round, No. 6; shakeproof-type, tw ext teeth (Att. Pt.)	8	
–162	M7480544P8K	—	. . INSULATOR, standoff	2	
–163	M7462416P1	—	. . INSULATOR, standoff	6	
–164	K7872445P1	—	. . WASHER, flat	6	
–165	K7878455P1	—	. . TERMINAL, lug	6	
–166	AN515–6–6	—	. . SCREW, mach: slot drive; RH; steel, cad pl; No. 6–32; 3/8 in lg (Att. Pt. for items 162 thru 165)	8	
–167	AN936B6B	—	. . WASHER, lock: bronze, tinned; round, No. 6; shakeproof-type, tw ext teeth (Att. Pt. for items 162 thru 165)	8	
–168	M2R53P21	—	. . GROMMET	4	
	ML7000272G1	—	. . RESISTOR ASSEMBLY, fixed	1	
–169	AN515–4–4	—	. . SCREW, mach: slot drive; RH; steel, cad pl; No. 4–40; 1/4 in lg (Att. Pt.)	2	
–170	AN936B4B	—	. . WASHER, lock: bronze, tinned; round, No. 4; shakeproof-type, tw ext teeth (Att. Pt.)	2	
–171	RC30BF472J	R777	. . . RESISTOR, fixed	1	
–172	RC30BF224J	R772	. . . RESISTOR, fixed	1	
–173	RC20BF104J	R764	. . . RESISTOR, fixed	1	
–174	RC20BF152J	R761	. . . RESISTOR, fixed	1	
–175	RC20BF104J	R763	. . . RESISTOR, fixed	1	
–176	RC20BF104J	R769	. . . RESISTOR, fixed	1	
–177	RC30BF472J	R760	. . . RESISTOR, fixed	1	
–178	M7480544P5C	—	. . . POST, spacing	2	
–179	AN515–4–4	—	. . . SCREW, mach: slot drive; RH; steel, cad pl; No. 4–40; 1/4 in lg (Att. Pt.)	2	
–180	AN936B4B	—	. . . WASHER, lock: bronze, tinned; round, No. 4; shakeproof-type, tw ext teeth (Att. Pt.)	2	
	ML7000313G1	—	. . . BOARD, terminal	1	
–181	K7000313P2	—	. . . . PANEL	1	
–182	T100–3	—	. . . . TERMINAL, stud (Bead Chain)	14	
	ML7000314G1	—	. . RESISTOR SUBASSEMBLY, fixed	1	
–183	AN515–4–4	—	. . SCREW, mach: slot drive; RH; steel, cad pl; No. 4–40; 1/4 in lg (Att. Pt.)	2	
–184	AN936B4B	—	. . WASHER, lock: bronze, tinned; round, No. 4; shakeproof-type, tw ext teeth (Att. Pt.)	2	
–185	M7482914P86	R745	. . . RESISTOR, fixed	1	
–186	M7480544P5C	—	. . . POST, spacing	2	
–187	TH13	—	. . . CLIP (Mallory)	1	
–188	AN515–4–4	—	. . . SCREW, mach: slot drive; RH; steel, cad pl; No. 4–40; 1/4 in lg (Att. Pt. for item 186)	2	
–189	AN515–4–5	—	. . . SCREW, mach: slot drive; RH; steel, cad pl; No. 4–40; 5/16 in lg (Att. Pt. for item 187)	1	
–190	AN936B4B	—	. . . WASHER, lock: bronze, tinned; round, No. 4; shakeproof-type, tw ext teeth (Att. Pt. for items 186 and 187)	3	
–191	AN340–4	—	. . . NUT, hex: steel, cad pl; No. 4–40 (Att. Pt. for item 187)	1	
	ML7000315G1	—	. . . BOARD, terminal	1	
–192	K7000315P2	—	. . . . PANEL	1	
–193	T100–3	—	. . . . TERMINAL, stud (Bead Chain)	2	
–194	CP54B4FG104V	C737	. . CAPACITOR, fixed	1	
–195	CP54B4FG104V	C738	. . CAPACITOR, fixed	1	
–196	CP54B4FG104V	C728	. . CAPACITOR, fixed	1	
–197	CP54B4FG104V	C730	. . CAPACITOR, fixed	1	
–198	AN515–6–5	—	. . SCREW, mach: slot drive; RH; steel, cad pl; No. 6–32; 5/16 in lg (Att. Pt. for items 194 and 195)	4	
–199	AN515–6–24	—	. . SCREW, mach: slot drive; RH; steel, cad pl; No. 6–32; 1-1/2 in lg (Att. Pt. for items 196 and 197)	4	
–200	AN936B6B	—	. . WASHER, lock: bronze, tinned; round, No. 6; shakeproof-type, tw ext teeth (Att. Pt. for items 194 thru 197)	8	
–201	AN340–6	—	. . NUT, hex: steel, cad pl; No. 6–32 (Att. Pt. for items 194 thru 197)	8	
	ML7000271G1	—	. . RESISTOR ASSEMBLY, fixed	1	
–202	AN515–4–4	—	. . SCREW, mach: slot drive; RH; steel, cad pl; No. 4–40; 1/4 in lg (Att. Pt.)	2	
–203	AN936B4B	—	. . WASHER, lock: bronze, tinned; round, No. 4; shakeproof-type, tw ext teeth (Att. Pt.)	2	
–204	RC20BF104J	R747	. . . RESISTOR, fixed	1	
–205	RC20BF104J	R748	. . . RESISTOR, fixed	1	
–206	RC20BF104J	R750	. . . RESISTOR, fixed	1	
–207	RC20BF152J	R752	. . . RESISTOR, fixed	1	
–208	RC30BF472J	R753	. . . RESISTOR, fixed	1	
–209	RC30BF472J	R776	. . . RESISTOR, fixed	1	
–210	RC40BF330K	R754	. . . RESISTOR, fixed	1	
–211	RC40BF330K	R755	. . . RESISTOR, fixed	1	
–212	M7480544P5C	—	. . . POST, spacing	2	
–213	AN515–4–4	—	. . . SCREW, mach: slot drive; RH; steel, cad pl; No. 4–40; 1/4 in lg (Att. Pt.)	2	
–214	AN936B4B	—	. . . WASHER, lock: bronze, tinned; round, No. 4; shakeproof-type, tw ext teeth (Att. Pt.)	2	
	ML7000270G1	—	. . . BOARD, terminal	1	

FIG. & INDEX NO.	PART NUMBER	REF SYMBOL	NOMENCLATURE 1 2 3 4 5 6 7	UNITS PER ASSY	APPLI-CATION
			RF OSCILLATOR O–94/CPS–6B (Cont)		
28–215	K7000270P2	—	. . . . PANEL	1	
–216	T100–3	—	. . . . TERMINAL, stud (Bead Chain)	12	
–217	ML7666812G1	—	. . AFC SERVO AMPLIFIER (See Figure 34 for breakdown)	1	
–218	AN515–6–5	—	. . SCREW, mach: slot drive; RH; steel, cad pl; No. 6–32; 5/16 in lg (Att. Pt.)	4	
–219	AN936B6B	—	. . WASHER, lock: bronze, tinned; round, No. 6; shakeproof-type, tw ext teeth (Att. Pt.)	4	
–220	SOS6	—	. . SHIELD, tube	2	
–221	6J6	V716	. . TUBE, electron	1	
–222	6J6	V715	. . TUBE, electron	1	
–223	S010M	XV716	. . SOCKET, tube	1	
–224	S010M	XV715	. . SOCKET, tube	1	
–225	AN515–4–6	—	. . SCREW, mach: slot drive; RH; steel, cad pl; No. 4–40; 3/8 in lg (Att. Pt. for items 223 and 224)	4	
–226	AN936B4B	—	. . WASHER, lock: bronze, tinned; round, No. 4; shakeproof-type, tw ext teeth (Att. Pt. for items 223 and 224)	4	
–227	AN340–4	—	. . NUT, hex: steel, cad pl; No. 4–40 (Att. Pt. for items 223 and 224)	4	
–228	6X5GT	V713	. . TUBE, electron	1	
–229	TSB8T101	XV713	. . SOCKET, tube	1	
–230	AN515–6–6	—	. . SCREW, mach: slot drive; RH; steel, cad pl; No. 6–32; 3/8 in lg (Att. Pt.)	2	
–231	AN936B6B	—	. . WASHER, lock: bronze, tinned; round, No. 6; shakeproof-type, tw ext teeth (Att. Pt.)	2	
–232	AN340–6	—	. . NUT, hex: steel, cad pl; No. 6–32 (Att. Pt.)	2	
–233	M7476737P4	—	. . CLAMP	1	
–234	AN515–8–6	—	. . SCREW, mach: slot drive; RH; steel, cad pl; No. 8–32; 3/8 in lg (Att. Pt.)	1	
–235	AN936B8B	—	. . WASHER, lock: bronze, tinned; round, No. 8; shakeproof-type, tw ext teeth (Att. Pt.)	1	
–236	AN340–8	—	. . NUT, hex: steel, cad pl; No. 8–32 (Att. Pt.)	1	
–237	275C	K701	. . RELAY, armature (WECo)	1	
–238	275C	K704	. . RELAY, armature (WECo)	1	
–239	K7887522P2	K703	. . RELAY, thermal	1	
–240	K7887522P6	K702	. . RELAY, thermal	1	
–241	TSB8T101	XK701	. . SOCKET, tube	1	
–242	TSB8T101	XK704	. . SOCKET, tube	1	
–243	TSB8T101	XK703	. . SOCKET, tube	1	
–244	TSB8T101	XK702	. . SOCKET, tube	1	
–245	AN515–6–6	—	. . SCREW, mach: slot drive; RH; steel, cad pl; No. 6–32; 3/8 in lg (Att. Pt. for items 241 thru 244)	8	
–246	AN936B6B	—	. . WASHER, lock: bronze, tinned; round, No. 6; shakeproof-type, tw ext teeth (Att. Pt. for items 241 thru 244)	8	
–247	AN340–6	—	. . NUT, hex: steel, cad pl; No. 6–32 (Att. Pt. for items 241 thru 244)	8	
–248	926B	—	. . CLAMP (Birtcher)	4	
–249	AN515–8–6	—	. . SCREW, mach: slot drive; RH; steel, cad pl; No. 8–32; 3/8 in lg (Att. Pt.)	3	
–250	AN515–8–4	—	. . SCREW, mach: slot drive; RH; steel, cad pl; No. 8–32; 1/4 in lg (Att. Pt.)	1	
–251	AN936B8B	—	. . WASHER, lock: bronze, tinned; round, No. 8; shakeproof-type, tw ext teeth (Att. Pt.)	4	
–252	AN340–8	—	. . NUT, hex: steel, cad pl; No. 8–32 (Att. Pt.)	3	
–253	M7480544P17D	—	. . POST, spacing	1	
–254	AN515–8–5	—	. . SCREW, mach: slot drive; RH; steel, cad pl; No. 8–32; 5/16 in lg (Att. Pt.)	1	
–255	AN936B8B	—	. . WASHER, lock: bronze, tinned; round, No. 8; shakeproof-type, tw ext teeth (Att. Pt.)	1	
	ML7700364G1	—	. . MOUNTING, capacitor	1	
–256	AN515–8–6	—	. . SCREW, mach: slot drive; RH; steel, cad pl; No. 8–32; 3/8 in lg (Att. Pt.)	4	
–257	AN936B8B	—	. . WASHER, lock: bronze, tinned; round, No. 8; shakeproof-type, tw ext teeth (Att. Pt.)	4	
–258	M7480544P10M	—	. . . POST, spacing	4	
–259	AN515–8–6	—	. . . SCREW, mach: slot drive; RH; steel, cad pl; No. 8–32; 3/8 in lg (Att. Pt.)	4	
–260	AN936B8B	—	. . . WASHER, lock: bronze, tinned; round, No. 8; shakeproof-type, tw ext teeth (Att. Pt.)	4	
–261	P7700364P2	—	. . . PANEL	1	
–262	CP70B1FF205K	C731	. . CAPACITOR, fixed	1	
–263	CP70B1FF205K	C732	. . CAPACITOR, fixed	1	
–264	CP70B1FG104K	C733	. . CAPACITOR, fixed	1	
–265	CP70B1FG104K	C734	. . CAPACITOR, fixed	1	
–266	CP70B1FF205K	C735	. . CAPACITOR, fixed	1	
–267	CP70B1FF205K	C736	. . CAPACITOR, fixed	1	
–268	CP07SA3	—	. . CLAMP (Att. Pt. for items 262, 263, 266 and 267)	8	
–269	CP07SA1	—	. . CLAMP (Att. Pt. for items 264 and 265)	4	
–270	AN345–10	—	. . NUT, hex: steel, cad pl; No. 10–32 (Att. Pt. for items 262 thru 267)	12	
–271	AN936B10B	—	. . WASHER, lock: bronze, tinned; round, No. 10; shakeproof-type, tw ext teeth (Att. Pt. for items 262 thru 267)	12	
–272	7481554	L706	. . REACTOR (GE)	1	
–273	7403301	L704	. . REACTOR (GE)	1	
–274	7483766	T703	. . TRANSFORMER, power (GE)	1	
–275	7482717	T702	. . TRANSFORMER, power (GE)	1	
–276	7403301	L707	. . REACTOR (GE)	1	
–277	7403300	T705	. . TRANSFORMER, power (GE)	1	
–278	7403300	T704	. . TRANSFORMER, power (GE)	1	
–279	AN340–6	—	. . NUT, hex: steel, cad pl; No. 6–32 (Att. Pt. for items 272 thru 278)	26	
–280	AN936B6B	—	. . WASHER, lock: bronze, tinned; round, No. 6; shakeproof-type, tw ext teeth (Att. Pt. for items 272 thru 278)	26	
–281	CP70B1FF205K	C724	. . CAPACITOR, fixed	1	
–282	CP70B1FG205K	C726	. . CAPACITOR, fixed	1	
–283	CP70B1FF106K	C725	. . CAPACITOR, fixed	1	
–284	CP07SC4	—	. . CLAMP (Att. Pt.)	2	

FIG. & INDEX NO.	PART NUMBER	REF SYMBOL	NOMENCLATURE 1 2 3 4 5 6 7	UNITS PER ASSY	APPLI-CATION
			RF OSCILLATOR O–94/CPS–6B (Cont)		
28–285	CP07SA3	—	. . CLAMP (Att. Pt. for item 281)	2	
–286	CP07SA5	—	. . CLAMP (Att. Pt. for item 282)	2	
–287	AN345–10	—	. . NUT, hex: steel, cad pl; No. 10–32 (Att. Pt. for items 281, 282 and 283)	6	
–288	AN936B10B	—	. . WASHER, lock: bronze, tinned; round, No. 10; shakeproof-type, tw ext teeth (Att. Pt. for items 281, 282 and 283)	6	
–289	6RS5C37	CR703	. . RECTIFIER, metallic (GE)	1	
–290	CP07SA3	—	. . CLAMP (Att. Pt.)	2	
–291	AN345–10	—	. . NUT, hex: steel, cad pl; No. 10–32 (Att. Pt.)	2	
–292	AN936B10B	—	. . WASHER, lock: bronze, tinned; round, No. 10; shakeproof-type, tw ext teeth (Att. Pt.)	2	
–293	CE41C122F	C727	. . CAPACITOR, fixed	1	
–294	AN3102–22–33S	J703	. . CONNECTOR, receptacle	1	
–295	AN3102–22–33S	J718	. . CONNECTOR, receptacle	1	
–296	AN3102–22–33S	J717	. . CONNECTOR, receptacle	1	
–297	AN3102–22–33S	J716	. . CONNECTOR, receptacle	1	
–298	AN515–4–6	—	. . SCREW, mach: slot drive; RH; steel, cad pl; No. 4–40; 3/8 in lg (Att. Pt. for items 294 thru 297)	16	
–299	AN936B4B	—	. . WASHER, lock: bronze, tinned; round, No. 4; shakeproof-type, tw ext teeth (Att. Pt. for items 294 thru 297)	16	
–300	AN340–4	—	. . NUT, hex: steel, cad pl; No. 4–40 (Att. Pt. for items 294 thru 297)	16	
–301	M7474939P24	L708	. . COIL, RF	1	
–302	M7474939P24	L709	. . COIL, RF	1	
–303	M7474939P24	L710	. . COIL, RF	1	
–304	M7474939P23	L711	. . COIL, RF	1	
–305	AN340–6	—	. . NUT, hex: steel, cad pl; No. 6–32 (Att. Pt. for items 301 thru 304)	8	
–306	AN936B6B	—	. . WASHER, lock: bronze, tinned; round, No. 6; shakeproof-type, tw ext teeth (Att. Pt. for items 301 thru 304)	8	
–307	ML7400978G1	—	. . MOUNTING, bracket	1	
–308	AN515–6–6	—	. . SCREW, mach: slot drive; RH; steel, cad pl; No. 6–32; 3/8 in lg (Att. Pt.)	4	
–309	AN936B6B	—	. . WASHER, lock: bronze, tinned; round, No. 6; shakeproof-type, tw ext teeth (Att. Pt.)	4	
–310	AN340–6	—	. . NUT, hex: steel, cad pl; No. 6–32 (Att. Pt.)	4	
	ML7007778G1	—	. . CAPACITOR-RESISTOR SUBASSEMBLY	1	
–311	AN515–8–6	—	. . SCREW, mach: slot drive; RH; steel, cad pl; No. 8–32; 3/8 in lg (Att. Pt.)	2	
–312	AN936B8B	—	. . WASHER, lock: bronze, tinned; round, No. 8; shakeproof-type, tw ext teeth (Att. Pt.)	2	
–313	CM35D472J	C740	. . . CAPACITOR, fixed	1	
–314	CM35D472J	C741	. . . CAPACITOR, fixed	1	
–315	RC40BF330J	R783	. . . RESISTOR, fixed	1	
–316	RC40BF330J	R785	. . . RESISTOR, fixed	1	
–317	M7480544P11F	—	. . . POST, spacing	2	
–318	AN515–4–5	—	. . . SCREW, mach: slot drive; RH; steel, cad pl; No. 4–40; 5/16 in lg (Att. Pt.)	2	
–319	AN936B4B	—	. . . WASHER, lock: bronze, tinned; round, No. 4; shakeproof-type, tw ext teeth (Att. Pt.)	2	
	ML7007777G1	—	. . . BOARD, terminal	1	
–320	K7000777P2	—	. . . . PANEL	1	
–321	T100–3	—	. . . . TERMINAL, stud (Bead Chain)	1	
–322	CM35D472J	C715	. . CAPACITOR, fixed	1	
–323	CM35D472J	C739	. . CAPACITOR, fixed	1	
–324	RC20BF104J	R775	. . RESISTOR, fixed	1	
–325	RC20BF104J	R718	. . RESISTOR, fixed	1	
–326	RC20BF104J	R719	. . RESISTOR, fixed	1	
–327	RC20BF104J	R756	. . RESISTOR, fixed	1	
–328	RC20BF104J	R757	. . RESISTOR, fixed	1	
–329	RC20BF104J	R751	. . RESISTOR, fixed	1	
–330	RC20BF471J	R762	. . RESISTOR, fixed	1	
–331	RC40BF330J	R758	. . RESISTOR, fixed	1	
–332	RC40BF330J	R759	. . RESISTOR, fixed	1	
–333	RC40BF330J	R786	. . RESISTOR, fixed	1	
–334	RC40BF330J	R784	. . RESISTOR, fixed	1	
–335	CM35D472J	C744	. . CAPACITOR, fixed	1	
–336	CM35D472J	C742	. . CAPACITOR, fixed	1	
–337	CM35D472J	C743	. . CAPACITOR, fixed	1	
–338	CM35D472J	C745	. . CAPACITOR, fixed	1	
			CHASSIS		
29–	ML7354033G1	—	. . CHASSIS (See Figure 28–1 for next higher assembly)	Ref	
–1	K7126123P1	—	. . . SCREW, captive	6	
–2	K7128235P2	—	. . . BUSHING	6	
–3	T7666834P1	—	. . . COVER	1	
–4	AN515–8–7	—	. . . SCREW, mach: slot drive; RH; steel, cad pl; No. 8–32; 7/16 in lg (Att. Pt.)	2	
–5	AN936B8B	—	. . . WASHER, lock: bronze, tinned; round, No. 8; shakeproof-type, tw ext teeth (Att. Pt.)	2	
–6	AN515–8–8	—	. . . SCREW, mach: slot drive; RH; steel, cad pl; No. 8–32; 1/2 in lg (Att. Pt.)	9	
–7	AN936B8B	—	. . . WASHER, lock: bronze, tinned; round, No. 8; shakeproof-type, tw ext teeth (Att. Pt.)	9	
–8	AN340–8	—	. . . NUT, hex: steel, cad pl; No. 8–32 (Att. Pt.)	9	

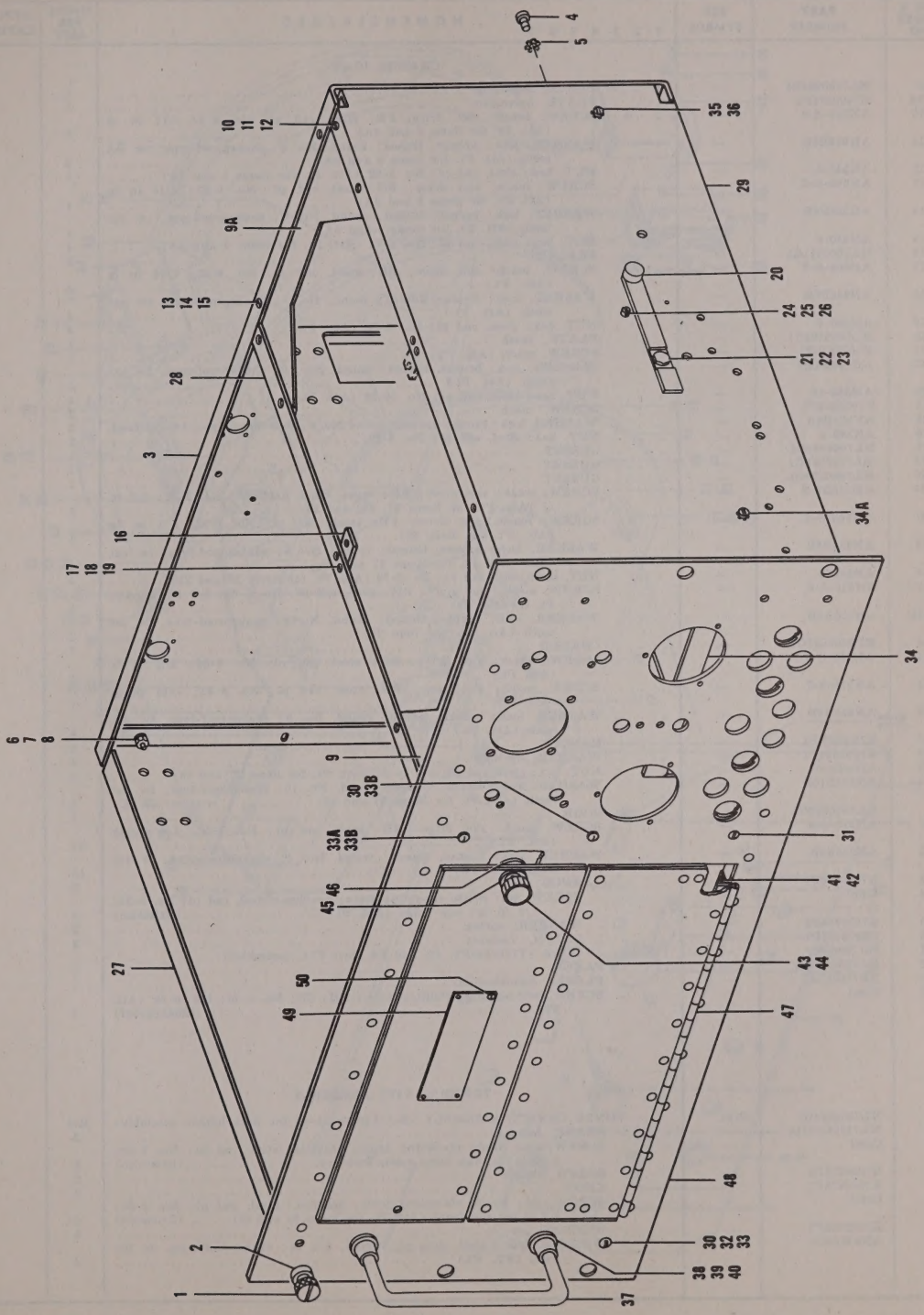

Figure 29. Chassis

FIG. & INDEX NO.	PART NUMBER	REF SYMBOL	NOMENCLATURE 1 2 3 4 5 6 7	UNITS PER ASSY	APPLI-CATION
			CHASSIS (Cont)		
29–9	ML7400964G1	—	. . . PLATE, mounting	1	
–9A	M7400964P4	—	. . . PLATE, mounting	1	
–10	AN505–8–8	—	. . . SCREW, mach: slot drive; FH; steel, cad pl; No. 8–32; 1/2 in lg (Att. Pt. for items 9 and 9A)	8	
–11	AN936B8B	—	. . . WASHER, lock: bronze, tinned; round, No. 8; shakeproof-type, tw ext teeth (Att. Pt. for items 9 and 9A)	8	
–12	AN340–8	—	. . . NUT, hex: steel, cad pl; No. 8–32 (Att. Pt. for items 9 and 9A)	8	
–13	AN505–6–7	—	. . . SCREW, mach: slot drive; FH; steel, cad pl; No. 6–32; 7/16 in lg (Att. Pt. for items 9 and 9A)	4	
–14	AN936B6B	—	. . . WASHER, lock: bronze, tinned; round, No. 6; shakeproof-type, tw ext teeth (Att. Pt. for items 9 and 9A)	4	
–15	AN340–6	—	. . . NUT, hex: steel, cad pl; No. 6–32 (Att. Pt. for items 9 and 9A)	4	
–16	ML7000311G1	—	. . . BRACKET	2	
–17	AN505–6–7	—	. . . SCREW, mach: slot drive; FH; steel, cad pl; No. 6–32; 7/16 in lg (Att. Pt.)	4	
–18	AN936B6B	—	. . . WASHER, lock: bronze, tinned; round, No. 6; shakeproof-type, tw ext teeth (Att. Pt.)	4	
–19	AN340–6	—	. . . NUT, hex: steel, cad pl; No. 6–32 (Att. Pt.)	4	
–20	ML7005399G1	—	. . . PLATE, catch	1	
–21	K7003070P1	—	. . . SCREW, mach (Att. Pt.)	1	
–22	AN936B10B	—	. . . WASHER, lock: bronze, tinned; round, No. 10; shakeproof-type, tw ext teeth (Att. Pt.)	1	
–23	AN345–10	—	. . . NUT, hex: steel, cad pl; No. 10–32 (Att. Pt.)	1	
–24	K7003069P1	—	. . . SCREW, mach	2	
–25	AN936B6B	—	. . . WASHER, lock: bronze, tinned; round No. 6; shakeproof-type, tw ext teeth	2	
–26	AN340–6	—	. . . NUT, hex: steel, cad pl; No. 6–32	2	
–27	ML7666835G1	—	. . . GUSSET	1	
–28	ML7666836G1	—	. . . GUSSET	1	
–29	ML7666839G1	—	. . . GUSSET	1	
–30	AN515B8–8	—	. . . SCREW, mach: slot drive; RH; brass, black oxidized; No. 8–32; 1/2 in lg (Att. Pt. for items 27, 28, and 29)	5	
–31	AN505–8–8	—	. . . SCREW, mach: slot drive; FH; steel, cad pl; No. 8–32; 1/2 in lg (Att. Pt. for item 28)	1	
–32	AN936B8B	—	. . . WASHER, lock: bronze, tinned; round, No. 8; shakeproof-type, tw ext teeth (Att. Pt. for items 27 and 29)	4	
–33	AN340–8	—	. . . NUT, hex: steel, cad pl; No. 8–32 (Att. Pt. for items 27 and 29)	4	
–33A	AN515–8–6	—	. . . SCREW, mach: slot drive; RH; steel, cad pl; No. 8–32; 3/8 in lg (Att. Pt. for item 28)	1	
–33B	AN936A8B	—	. . . WASHER, lock: bronze, tinned; round, No. 8; shakeproof-type, tw int teeth (Att. Pt. for item 28)	2	
–34	ML7666832G1	—	. . . CHASSIS	1	
–34A	AN515–8–6	—	. . . SCREW, mach: slot drive; RH; steel, cad pl; No. 8–32; 3/3 in lg (Att. Pt.)	1	
–35	AN515–8–7	—	. . . SCREW, mach: slot drive; RH; steel, cad pl; No. 8–32; 7/16 in lg (Att. Pt.)	7	
–36	AN936B8B	—	. . . WASHER, lock: bronze, tinned; round, No. 8; shakeproof-type, tw ext teeth (Att. Pt.)	8	
–37	K7002870P1	—	. . . HANDLE	2	
–38	K7002869P1	—	. . . WASHER, extruded	4	
–39	AN345–10	—	. . . NUT, hex: steel, cad pl; No. 10–32 (Att. Pt. for items 37 and 38)	4	
–40	AN936B10B	—	. . . WASHER, lock: bronze, tinned; round, No. 10; shakeproof-type, tw ext teeth (Att. Pt. for items 37 and 38)	4	
	ML7666838G1	—	. . . DOOR	1	
–41	AN515–4–4	—	. . . SCREW, mach: slot drive; RH; steel, cad pl; No. 4–40; 1/4 in lg (Att. Pt.)	10	
–42	AN936B4B	—	. . . WASHER, lock: bronze, tinned; round, No. 4; shakeproof-type, tw ext teeth (Att. Pt.)	10	
–43	K7000310P1	—	. . . . KNOB	2	
–44	Coml	—	. . . . SCREW, set: Bristo six-spline drive; headless; steel, cad pl; No. 8–32; 1/8 in lg; cup point (Att. Pt.) (Bristolco)	2	
–45	K7870294P2	—	. . . . WASHER, spring	2	
–46	K7000307P1	—	. . . . CATCH, fastener	2	
–47	No Number	—	. . . . DOOR (T7666838P2, P3 and P8 thru P12, assembled)	1	
–48	ML7666837G1	—	. . . PANEL	1	
–49	NP140020A	—	. . . PLATE, identification	1	
–50	Coml	—	. . . SCREW, self-tapping: Phillips drive; RH; SS; No. 4–40; 1/4 in lg (Att. Pt.) (Shakeproof)	4	
			TUNED CAVITY ASSEMBLY		
30–	ML7354024G1	E701	. . TUNED CAVITY ASSEMBLY (See Figure 28–43 for next higher assembly)	Ref	
–1	ML7400930G1	—	. . . CRANK, hand	2	
–2	Coml	—	. . . SCREW, set: Bristo six-spline drive; headless; steel, cad pl; No. 8–32; 3/16 in lg; cup point (Att. Pt.) (Bristolco)	2	
–3	K7000276P1	—	. . . SCREW, thumb	2	
–4	K7000275P1	—	. . . KNOB	2	
–5	Coml	—	. . . SCREW, set: Bristo six-spline drive; headless; steel, cad pl; No. 4–40; 1/8 in lg; cup point (Att. Pt. for items 39 and 40) (Bristolco)	6	
–6	K7102063P1	—	. . . BUSHING	4	
–7	AN936A616	—	. . . WASHER, lock: steel, zinc pl; round, 3/8 in; shakeproof-type, tw int teeth (Att. Pt.)	4	

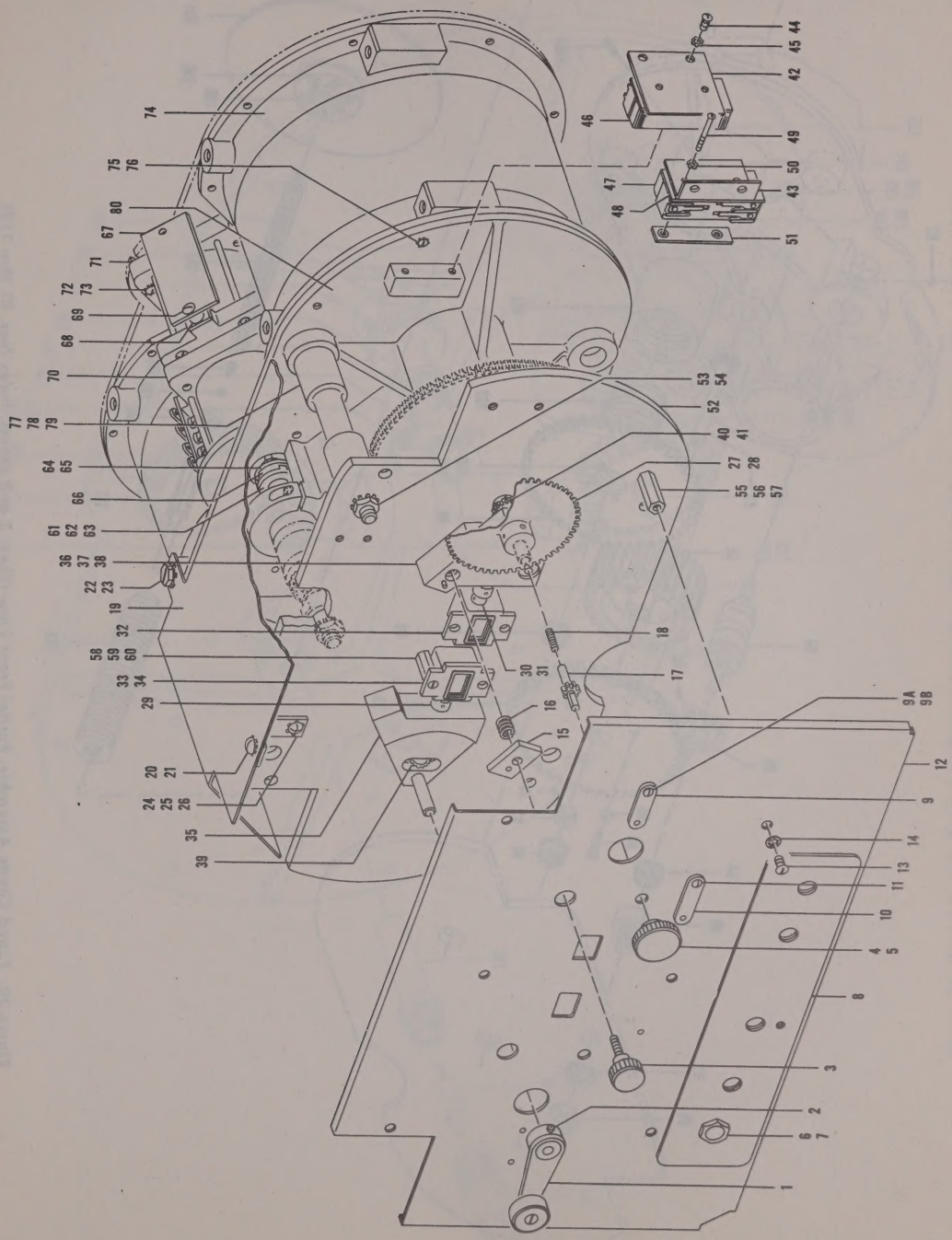

Figure 30. Tuned Cavity Assembly, Front View (Sheet 1 of 3 sheets, Index Nos. 1 thru 80)

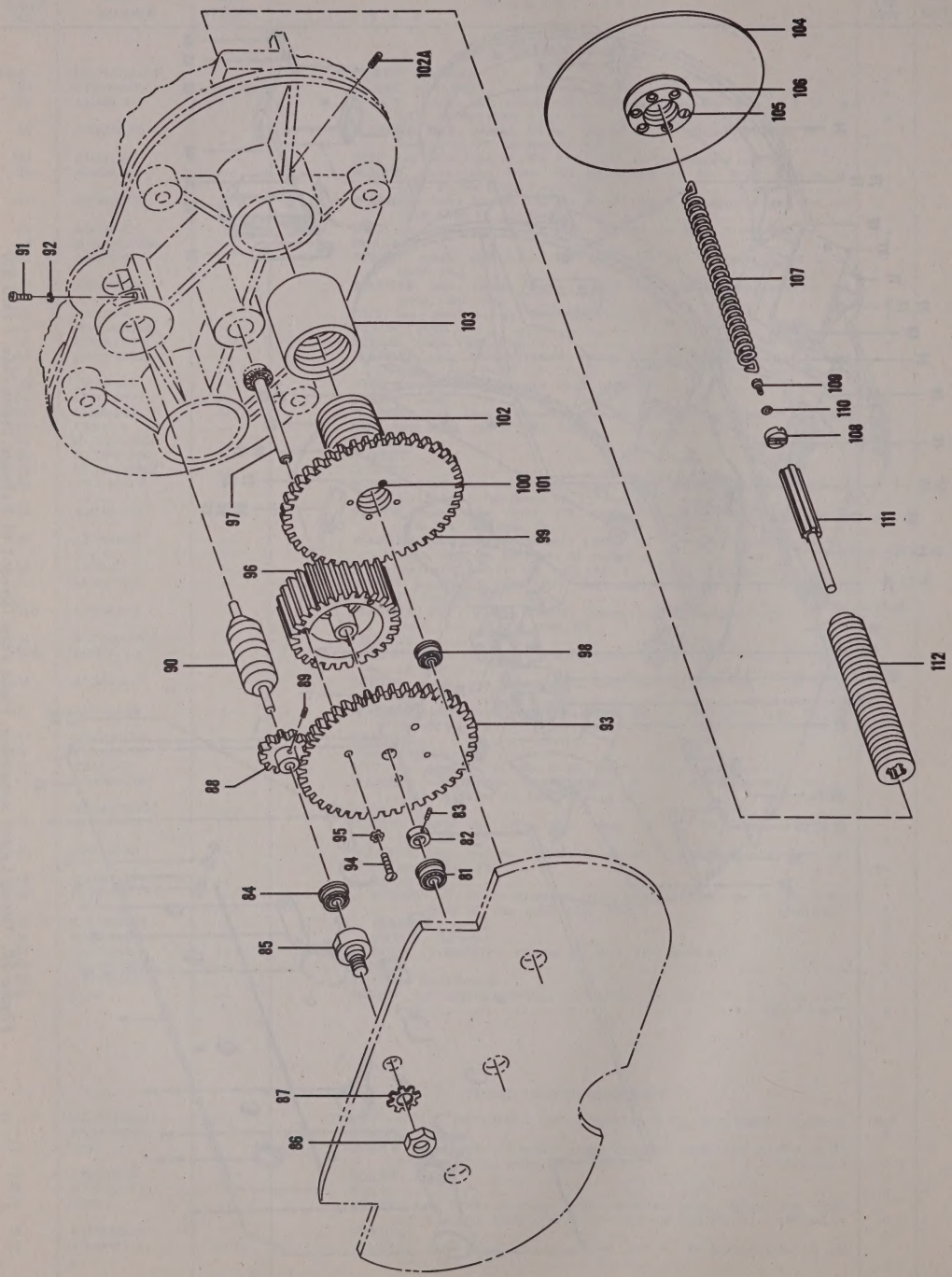

Figure 30. Tuned Cavity Assembly, Partial Front View (Sheet 2 of 3 sheets, Index Nos. 81 thru 112)

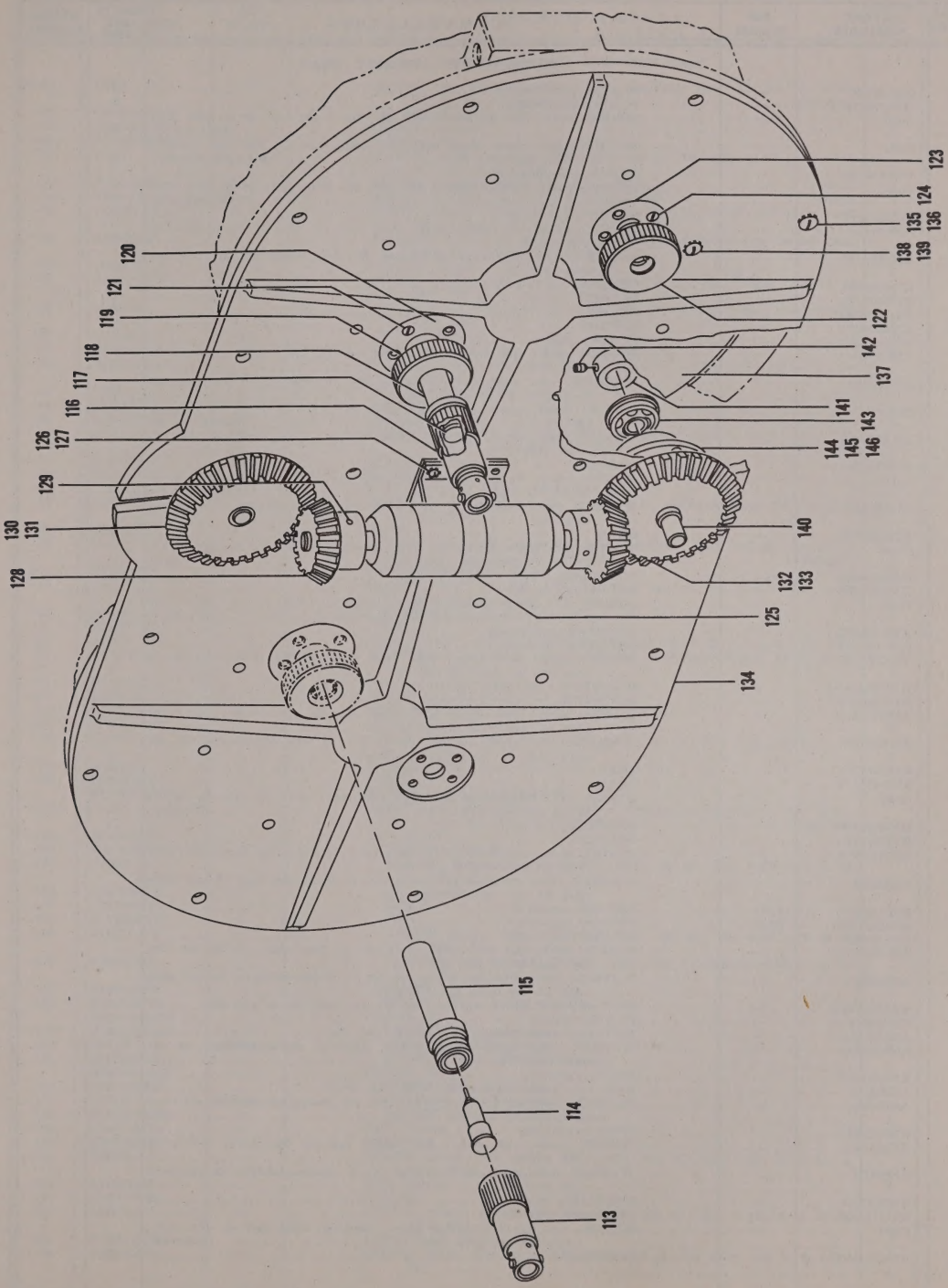

Figure 30. Tuned Cavity Assembly, Partial Rear View (Sheet 3 of 3 sheets, Index Nos. 113 thru 146)

FIG. & INDEX NO.	PART NUMBER	REF SYMBOL	NOMENCLATURE 1 2 3 4 5 6 7	UNITS PER ASSY	APPLI-CATION
			TUNED CAVITY ASSEMBLY (Cont)		
30–8	NP136190	—	PLATE, identification	1	
–9	NP137567R	—	PLATE, identification	2	
–9A	Coml	—	SCREW, mach: Phillips drive; RH; SS; No. 4–40; 3/16 in lg (Att. Pt.) (Shakeproof)	4	
–9B	Coml	—	WASHER, flat: brass, black oxidized; round, 0.125 in ID, 0.312 in OD, 0.016 in thk (Att. Pt.) (Wrought Washer)	4	
–10	NP137567S	—	PLATE, identification	2	
–11	Coml	—	SCREW, mach: Phillips drive; RH; SS; No. 4–40; 3/16 in lg (Att. Pt.) (Shakeproof)	4	
–12	T7666819P1	—	PANEL	1	
–13	AN520–10–4	—	SCREW, mach: slot drive; RH; steel, cad pl; No. 10–32; 1/4 in lg (Att. Pt.)	6	
–14	AN936A10	—	WASHER, lock: steel, cad pl; round, No. 10; shakeproof-type, tw int teeth (Att. Pt.)	6	
–15	K7000263P1	—	CLAMP	2	
–16	K7000250P1	—	SPRING	2	
–17	M7400917P1	—	GEAR	2	
–18	K7000248P1	—	SPRING	2	
–19	M7404452P1	—	PLATE, cover	1	
–20	AN520–10–4	—	SCREW, mach: slot drive; RH; steel, cad pl; No. 10–32; 1/4 in lg (Att. Pt.)	2	
–21	AN936B10	—	WASHER, lock: steel, cad pl; round, No. 10; shakeproof-type, tw ext teeth (Att. Pt.)	2	
–22	Coml	—	SCREW, mach: slotted, hex hd; steel, cad pl; 1/4 in–28; 3/8 in lg (Att. Pt.) (Amer Screw)	2	
–23	AN936B416	—	WASHER, lock: steel, cad pl; round, 1/4 in; shakeproof-type, tw ext teeth (Att. Pt.)	2	
–24	K7004064P1	—	BRACKET	2	
–25	Coml	—	SCREW, mach: Phillips drive; RH; steel, cad pl; No. 8–32; 9/16 in lg (Att. Pt.) (Amer Screw)	4	
–26	AN936B8	—	WASHER, lock: steel, cad pl; round, No. 8; shakeproof-type, tw ext teeth (Att. Pt.)	4	
–27	M7400929P1	—	GEAR	2	
–28	Coml	—	SCREW, set: Bristo six-spline drive; headless; steel, cad pl; No. 4–40; 1/4 in lg; cup point (Att. Pt.) (Bristolco)	4	
–29	K7000274P2	—	COUPLING, flexible	1	
–30	K7000274P1	—	COUPLING, flexible	1	
–31	Coml	—	SCREW, set: Bristo six-spline drive; headless; steel, cad pl; No. 4–40; 1/8 in lg; cup-point (Att. Pt. for items 29 and 30) (Bristolco)	2	
–32	K7001864P2	—	COUNTER, mechanical	1	
–33	K7001864P1	—	COUNTER, mechanical	1	
–34	AN515–4–4	—	SCREW, mach: slot drive; RH; steel, cad pl; No. 4–40; 1/4 in lg (Att. Pt. for items 32 and 33)	4	
–35	ML7700328G1	—	MOUNTING, mechanical counter	1	
–36	ML7700328G2	—	MOUNTING, mechanical counter	1	
–37	AN520–10–8	—	SCREW, mach: slot drive; RH; steel, cad pl; No. 10–32; 1/2 in lg (Att. Pt. for items 35 and 36)	6	
–38	AN936B10	—	WASHER, lock: steel, cad pl; round, No. 10; shakeproof-type, tw ext teeth (Att. Pt. for items 35 and 36)	6	
–39	K7000256P1	—	GEAR	2	
–40	K7000252P1	—	GEAR	2	
–41	Coml	—	SCREW, set: Bristo six-spline drive; headless; steel, cad pl; No. 4–40; 1/8 in lg; cup point (Att. Pt.) (Bristolco)	2	
–42	M7400923P2	—	BRACKET	1	
–43	M7400923P1	—	BRACKET	1	
–44	AN515B8–6	—	SCREW, mach: slot drive; RH; brass, black oxidized; No. 8–32; 3/8 in lg (Att. Pt. for items 42 and 43)	4	
–45	AN936B8	—	WASHER, lock: steel, cad pl; round, No. 8; shakeproof-type, tw ext teeth (Att. Pt. for items 42 and 43)	4	
–46	M7474049P6	S704	SWITCH, sensitive	1	
–47	M7474049P6	S705	SWITCH, sensitive	1	
–48	K7000266P1	—	INSULATOR, plate	2	
–49	AN515–6–16	—	SCREW, mach: slot drive; RH; steel, cad pl; No. 6–32; 1 in lg (Att. Pt. for items 46, 47 and 48)	4	
–50	AN936B4	—	WASHER, lock: steel, cad pl; round, No. 4; shakeproof-type, tw ext teeth (Att. Pt. for items 46, 47 and 48)	4	
–51	ML7000244G1	—	NUT SUBASSEMBLY, anchor (Att. Pt. for items 46, 47 and 48)	2	
–52	T7666818P1	—	PLATE, bearing	1	
–53	AN304–516	—	NUT, hex: steel, cad pl; 5/16 in–18 (Att. Pt.)	4	
–54	AN936B516	—	WASHER, lock: steel, cad pl; round, 5/16 in; shakeproof-type, tw ext teeth (Att. Pt.)	4	
–55	K7000251P1	—	POST, supporting	6	
–56	AN345–10	—	NUT, hex: steel, cad pl; No. 10–32 (Att. Pt.)	6	
–57	AN936B10	—	WASHER, lock: steel, cad pl; round, No. 10; shakeproof-type, tw ext teeth (Att. Pt.)	6	
–58	K7000349P1	—	POST, supporting	4	
–59	AN515–4–8	—	SCREW, mach: slot drive; RH; steel, cad pl; No. 4–40; 1/2 in lg (Att. Pt.)	4	
–60	AN936B4	—	WASHER, lock: steel, cad pl; round, No. 4; shakeproof-type, tw ext teeth (Att. Pt.)	4	
–61	K7000239P1	—	COUPLING, flexible	1	
–62	M7461888P4	—	PIN, taper (Att. Pt.)	1	
–63	Coml	—	SCREW, set: Bristo six-spline drive; headless; steel, cad pl; No. 4–40; 1/8 in lg; cup point (Att. Pt.) (Bristolco)	2	
–64	K7000240P1	—	COUPLING	1	

FIG. & INDEX NO.	PART NUMBER	REF SYMBOL	NOMENCLATURE 1 2 3 4 5 6 7	UNITS PER ASSY	APPLI-CATION
			TUNED CAVITY ASSEMBLY (Cont)		
30–65	Coml	—	. . . SCREW, set: Bristo six-spline drive; headless; steel, cad pl; No. 4–40; 1/4 in lg; cup point (Att. Pt.) (Bristolco)	2	
–66	K700241P1	—	. . . COUPLING, rigid	1	
–67	K7004207P1	—	. . . SHIELD, contact	1	
–68	W7354024P104	—	. . . POST, spacing	2	
–69	Coml	—	. . . SCREW, mach: slot drive; RH; steel, cad pl; No. 6–32; 11/16 in lg (Att. Pt. for item 67 and 68)	2	
–70	FPE–25–22	B701	. . . MOTOR, AC (See Figure 31 for breakdown) (Diehl)	1	
–71	FPE–25–22	B702	. . . MOTOR, AC (See Figure 31 for breakdown) (Diehl)	1	
–72	AN520–10–8	—	. . . SCREW, mach: slot drive; RH; steel, cad pl; No. 10–32; 1/2 in lg (Att. Pt. for items 70 and 71)	8	
–73	AN936B10	—	. . . WASHER, lock: steel, cad pl; round, No. 10; shakeproof-type, tw ext teeth (Att. Pt. for items 70 and 71)	8	
–74	P7700330P1	—	. . . CAVITY, tuned	2	
–75	AN515–8–7	—	. . . SCREW, mach: slot drive; RH; steel, cad pl; No. 8–32; 7/16 in lg (Att. Pt.)	16	
–76	AN936B8	—	. . . WASHER, lock: steel, cad pl; round, No. 8; shakeproof-type, tw ext teeth (Att. Pt.)	16	
–77	M7400927P1	—	. . . POST, supporting	4	
–78	AN340–516	—	. . . NUT, hex: steel, cad pl; 5/16 in–18 (Att. Pt.)	4	
–79	AN936B516	—	. . . WASHER, lock: steel, cad pl; round, 5/16 in; shakeproof-type, tw ext teeth (Att. Pt.)	4	
–80	T7666816P1	—	. . . PLATE, mounting	1	
–81	K7000286P1	—	. . . BEARING	2	
–82	K7000273P1	—	. . . COLLAR, spacing	1	
–83	Coml	—	. . . SCREW, set: Bristo six-spline drive; headless; steel, cad pl; No. 4–40; 1/8 in lg; cup point (Att. Pt.) (Bristolco)	2	
–84	K7000285P1	—	. . . BEARING, ball	1	
–85	K7000297P1	—	. . . CUP, bearing	1	
–86	AN345–6	—	. . . NUT, hex: steel, cad pl; 3/8 in–24 (Att. Pt.)	1	
–87	AN936B616	—	. . . WASHER, lock: steel, cad pl; round, 3/8 in; shakeproof-type, tw ext teeth (Att. Pt.)	1	
–88	M7400924P1	—	. . . GEAR	1	
–89	Coml	—	. . . SCREW, set: Bristo six-spline drive; headless; steel, cad pl; No. 4–40; 1/8 in lg; cup point (Att. Pt.) (Bristolco)	2	
–90	B7408180P1	—	. . . REDUCTION UNIT, speed	1	
–91	AN501–10–7	—	. . . SCREW, mach: slot drive; Fil H; steel, cad pl; No. 10–32; 7/16 in lg (Att. Pt.)	1	
–92	AN935–10	—	. . . WASHER, lock: steel, cad pl; No. 8 (Att. Pt.)	1	
–93	M7400918P1	—	. . . GEAR	1	
–94	AN515–6–12	—	. . . SCREW, mach: slot drive; RH; steel, cad pl; No. 6–32; 3/4 in lg (Att. Pt.)	3	
–95	AN936B6	—	. . . WASHER, lock: steel, cad pl: round, No. 6; shakeproof-type, tw ext teeth (Att. Pt.)	3	
–96	M7400926P1	—	. . . GEAR	1	
–97	K7000264P1	—	. . . SHAFT	1	
–98	K7000285P1	—	. . . BEARING, ball	1	
–99	M7400921P1	—	. . . GEAR	2	
–100	AN515–4–5	—	. . . SCREW, mach: slot drive; RH; steel, cad pl; No. 4–40; 5/16 in lg (Att. Pt.)	8	
–101	AN935–4	—	. . . WASHER, lock: steel, cad pl; No. 4 (Att. Pt.)	8	
–102	K7000282P1	—	. . . SCREW, drive	2	
	ML7407580G1	—	. . . REFLECTOR SUBASSEMBLY	2	
–102A	Coml	—	. . . SCREW, set: Bristo six-spline drive; headless; steel, cad pl; No. 10–32; 3/16 in lg; cup point (Att. Pt.) (Bristolco)	2	
–103	K7000269P1	—	. . . . BUSHING	2	
–104	M7400936P1	—	. . . . PLATE, adjusting	1	
–105	AN505–6–8	—	. . . . SCREW, mach: slot drive; FH; steel, cad pl; No. 6–32; 1/2 in lg (Att. Pt.)	6	
–106	K7000238P1	—	. . . . NUT, anchor	1	
–107	A7019458P1	—	. . . . SPRING	1	
–108	K7000259P1	—	. . . . CAP	1	
–109	AN515–4–4	—	. . . . SCREW, mach: slot drive; RH; steel, cad pl; No. 4–40; 1/4 in lg (Att. Pt.)	1	
–110	AN936A4B	—	. . . . WASHER, lock: bronze, tinned; round, No. 4; shakeproof-type, tw int teeth (Att. Pt.)	1	
–111	K7000258P1	—	. . . . SHAFT	1	
–112	M7400920P1	—	. . . . SHAFT	1	
	ML7400960G2	—	. . . PROBE, RF	1	
–113	ML7400958G1	—	. . . . CONNECTOR, receptacle	1	
–114	1N21B	CR702	. . . . CRYSTAL UNIT, quartz	1	
–115	ML7400959G1	—	. . . . SOCKET SUBASSEMBLY, crystal	1	
	ML7400960G1	—	. . . PROBE, RF	1	
–116	ML7400958G1	—	. . . . CONNECTOR, receptacle	1	
–117	1N21B	CR701	. . . . CRYSTAL UNIT, quartz	1	
–118	ML7400959G1	—	. . . . SOCKET SUBASSEMBLY, crystal	1	
–119	K7000242P1	—	. . . NUT, thumb	2	
–120	K7000243P1	—	. . . COLLET	2	
–121	AN505–4–3	—	. . . SCREW, mach: slot drive; FH; steel, cad pl; No. 4–40; 3/16 in lg (Att. Pt.)	8	
–122	K7000265P1	—	. . . NUT, thumb	2	
–123	K7000267P1	—	. . . COLLET	2	
–124	AN505–4–3	—	. . . SCREW, mach: slot drive; FH; steel, cad pl; No. 4–40; 3/16 in lg (Att. Pt.)	8	
–125	P7700718P32	—	. . . REDUCTION UNIT, speed	1	
–126	AN515–4–8	—	. . . SCREW, mach: slot drive; RH; steel, cad pl; No. 4–40; 1/2 in lg (Att. Pt.)	4	

FIG. & INDEX NO.	PART NUMBER	REF SYMBOL	NOMENCLATURE 1 2 3 4 5 6 7	UNITS PER ASSY	APPLI-CATION
			TUNED CAVITY ASSEMBLY (Cont)		
30–127	AN936B4	—	. . . WASHER, lock: steel, cad pl; round, No. 4; shakeproof-type, tw ext teeth (Att. Pt.)	4	
–128	K7000318P1	—	. . . GEAR, bevel	2	
–129	Coml	—	. . . SCREW, set: Bristo six-spline drive; headless; steel, cad pl; No. 4–40; 1/4 in lg; cup point (Att. Pt.) (Bristolco)	4	
–130	ML7000300G1	—	. . . GEAR	1	
–131	Coml	—	. . . SCREW, set: Bristo six-spline drive; headless; steel, cad pl; No. 4–40; 1/4 in lg; cup point (Att. Pt.) (Bristolco)	2	
–132	K7000348P1	—	. . . GEAR	1	
–133	Coml	—	. . . SCREW, set: Bristo six-spline drive; headless; steel, cad pl; No. 4–40; 1/8 in lg; cup point (Att. Pt.) (Bristolco)	2	
–134	T7666817P1	—	. . . PLATE, mounting	1	
–135	AN515–8–7	—	. . . SCREW, mach: slot drive; RH; steel, cad pl; No. 8–32; 7/16 in lg (Att. Pt.)	16	
–136	AN936B8	—	. . . WASHER, lock: steel, cad pl; round, No. 8; shakeproof-type, tw ext teeth (Att. Pt.)	16	
–137	M7400919P1	—	. . . PLATE, end	2	
–138	AN515–8–6	—	. . . SCREW, mach: slot drive; RH; steel, cad pl; No. 6–32; 3/8 in lg (Att. Pt.)	16	
–139	AN936B6	—	. . . WASHER, lock: steel, cad pl; round, No. 6; shakeproof-type, tw ext teeth (Att. Pt.)	16	
–140	K7000302P1	—	. . . SHAFT	1	
–141	K7000273P1	—	. . . COLLAR, spacing	2	
–142	Coml	—	. . . SCREW, set: Bristo six-spline drive; headless; steel, cad pl; No. 4–40; 1/8 in lg; cup point (Att. Pt.) (Bristolco)	2	
–143	K7000286P1	—	. . . BEARING	2	
–144	K7000301P1	—	. . . BUSHING	1	
–145	AN515–6–7	—	. . . SCREW, mach: slot drive; RH; steel, cad pl; No. 6–32; 7/16 in lg (Att. Pt.)	4	
–146	AN936B6B	—	. . . WASHER, lock: bronze, tinned; round, No. 6; shakeproof-type, tw ext teeth (Att. Pt.)	4	

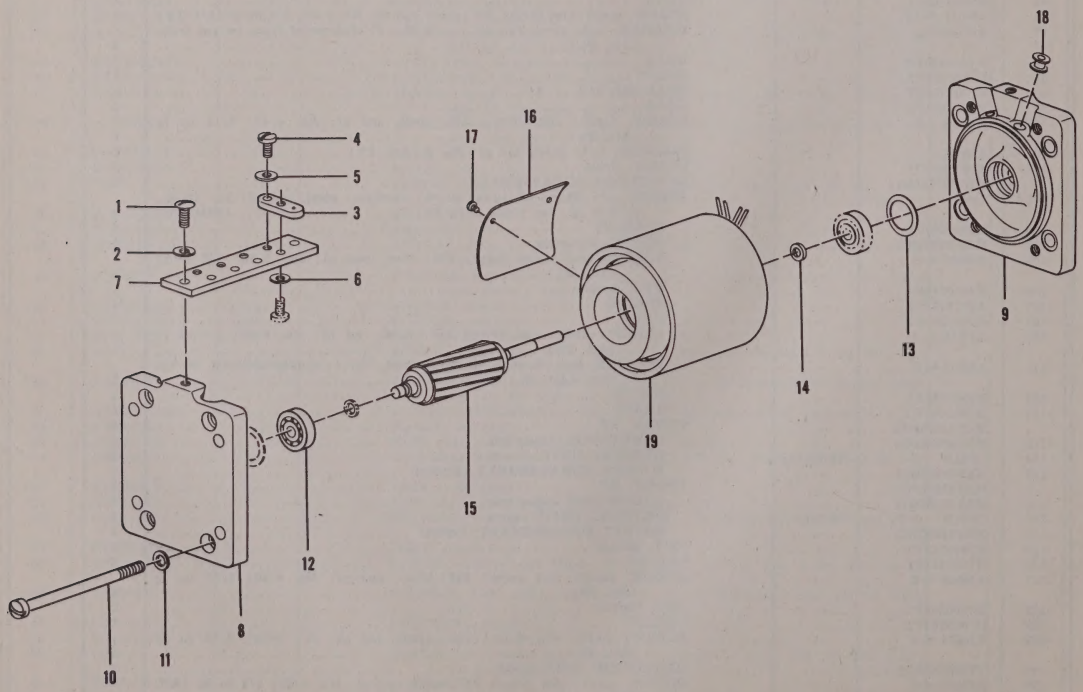

Figure 31. AC Motor

FIG. & INDEX NO.	PART NUMBER	REF SYMBOL	NOMENCLATURE 1 2 3 4 5 6 7	UNITS PER ASSY	APPLI-CATION
			AC MOTOR		
31–	FPE25–22	B701, B702	. . . AC MOTOR (See Figure 30–70 and –71 for next higher assembly) (Diehl)	Ref	
	5A97	—	. . . . BOARD, terminal (Diehl)	1	
–1	AN515–6–4	—	. . . . SCREW, mach: slot drive; RH; steel, cad pl; No. 6–32; 1/4 in lg (Att. Pt.)	2	
–2	AN935–6	—	. . . . WASHER, lock: steel, cad pl; No. 6 (Att. Pt.)	2	
–3	982556	—	. . . . . TERMINAL, lug (Diehl)	4	
–4	Coml	—	. . . . . SCREW, mach: slot drive; Fil H; brass, tin pl; No. 6–32; 1/4 in lg (Att. Pt.) (Amer Screw)	8	
–5	190232	—	. . . . . WASHER, flat (Att. Pt.) (Diehl)	4	
–6	701865	—	. . . . . WASHER, flat (Diehl)	4	
–7	895538	—	. . . . . PANEL (Diehl)	1	
–8	895707–1	—	. . . . COVER (Diehl)	1	
–9	895707–2	—	. . . . COVER (Diehl)	1	
–10	Coml	—	. . . . SCREW, mach: slot drive; Fil H; steel, cad pl; No. 8–32; 2-3/4 in lg; threaded portion 9/16 in lg (Att. Pt. for items 8 and 9) (Amer Screw)	4	
–11	AN935–8	—	. . . . WASHER, lock: steel, cad pl; No. 8 (Att. Pt. for items 8 and 9)	4	
–12	7034	—	. . . . BEARING, ball (ND)	2	
–13	913587	—	. . . . SHIM (Diehl)	2	
–14	1A283	—	. . . . COLLAR, spacing (Diehl)	2	
–15	1B204	—	. . . . ROTOR, motor (Diehl)	1	
–16	NP	—	. . . . PLATE, identification (Diehl)	1	
–17	Coml	—	. . . . SCREW, self-tapping: Phillips drive; Bind H; SS; No. 4–40; 3/16 in lg (Att. Pt.) (Shakeproof)	4	
–18	M2R53P1	—	. . . . GROMMET	4	
–19	1B166	—	. . . . MOTOR STATOR-HOUSING SUBASSEMBLY (Diehl)	1	
			DC AMPLIFIER		
32–	ML7354011G1	—	. . DC AMPLIFIER (See Figure 28–48 for next higher assembly)	Ref	
–1	M7400852P2	—	. . . COVER	1	
–2	AN515–6–7	—	. . . SCREW, mach: slot drive; RH; steel, cad pl; No. 6–32; 7/16 in lg (Att. Pt.)	4	
–3	ML7666446G1	—	. . . CHASSIS	2	
–4	ML7666842G1	E702	. . . CAVITY, tuned (See Figure 33 for breakdown)	1	
–5	M7403797P1	—	. . . SHIM	1	
–6	AN520–12–8	—	. . . SCREW, mach: slot drive; RH; steel, cad pl; No. 10–32; 3/4 in lg (Att. Pt. for items 4 and 5)	2	
–7	AN960–10L	—	. . . WASHER, flat: steel, cad pl; No. 10 (Att. Pt. for items 4 and 5)	2	
–8	AN936B10	—	. . . WASHER, lock: steel, cad pl; round, No. 10; shakeproof-type, tw ext teeth (Att. Pt. for items 4 and 5)	2	
–9	P7770822P6	—	. . . SHIELD, tube	2	
–10	12AX7	V706	. . . TUBE, electron	1	
–11	12AX7	V707	. . . TUBE, electron	1	
–12	P7770822P3	XV706	. . . SOCKET, tube	1	
–13	P7770822P3	XV707	. . . SOCKET, tube	1	
–14	K7878455P1	—	. . . TERMINAL, lug	1	
–15	AN515–4–4	—	. . . SCREW, mach: slot drive; RH; steel, cad pl; No. 4–40; 1/4 in lg (Att. Pt. for items 12, 13 and 14)	4	
–16	AN936B4B	—	. . . WASHER, lock: bronze, tinned; round, No. 4; shakeproof-type, tw ext teeth (Att. Pt. for items 12, 13 and 14)	4	
–17	AN340–4	—	. . . NUT, hex: steel, cad pl; No. 4–40 (Att. Pt. for items 12, 13 and 14)	4	
–18	SOS3	—	. . . SHIELD, tube	1	
–19	SOS6	—	. . . SHIELD, tube	2	
–20	8698	—	. . . SHIELD, tube (Cinch)	2	
–21	6J6	V708	. . . TUBE, electron	1	
–22	6AK5	V710	. . . TUBE, electron	1	
–23	6J6	V709	. . . TUBE, electron	1	
–24	OB2	V711	. . . TUBE, electron	1	
–25	OA2	V712	. . . TUBE, electron	1	
–26	SO10M	XV708	. . . SOCKET, tube	1	
–27	SO10M	XV710	. . . SOCKET, tube	1	
–28	SO10M	XV709	. . . SOCKET, tube	1	
–29	SO10M	XV711	. . . SOCKET, tube	1	
–30	SO10M	XV712	. . . SOCKET, tube	1	
–31	AN515–4–3	—	. . . SCREW, mach: slot drive; RH; steel, cad pl; No. 4–40; 3/16 in lg (Att. Pt. for items 26 thru 30)	10	
–32	AN936B4B	—	. . . WASHER, lock: bronze, tinned; round, No. 4; shakeproof-type, tw ext teeth (Att. Pt. for items 26 thru 30)	10	
–33	1060	—	. . . NUT, anchor (Att. Pt. for items 27 and 29) (Cinch)	2	
–34	1052	—	. . . NUT, anchor (Att. Pt. for items 26, 28 and 30) (Cinch)	3	
–35	2K28	V714	. . . TUBE, electron	1	
–36	K7113396P1	XV714	. . . SOCKET, tube	1	
	ML7400979G1	W703	. . . CABLE ASSEMBLY, RF	1	
–37	AN936B516B	—	. . . WASHER, lock: bronze, tinned; round, 5/16 in; shakeproof-type, tw ext teeth (Att. Pt.)	1	
–38	RG71/U	—	. . . . CABLE, RF: 9 in lg	1	
–39	NP136186K	—	. . . . MARKER, cable	1	
–40	NP137425A	—	. . . . MARKER, cable	1	

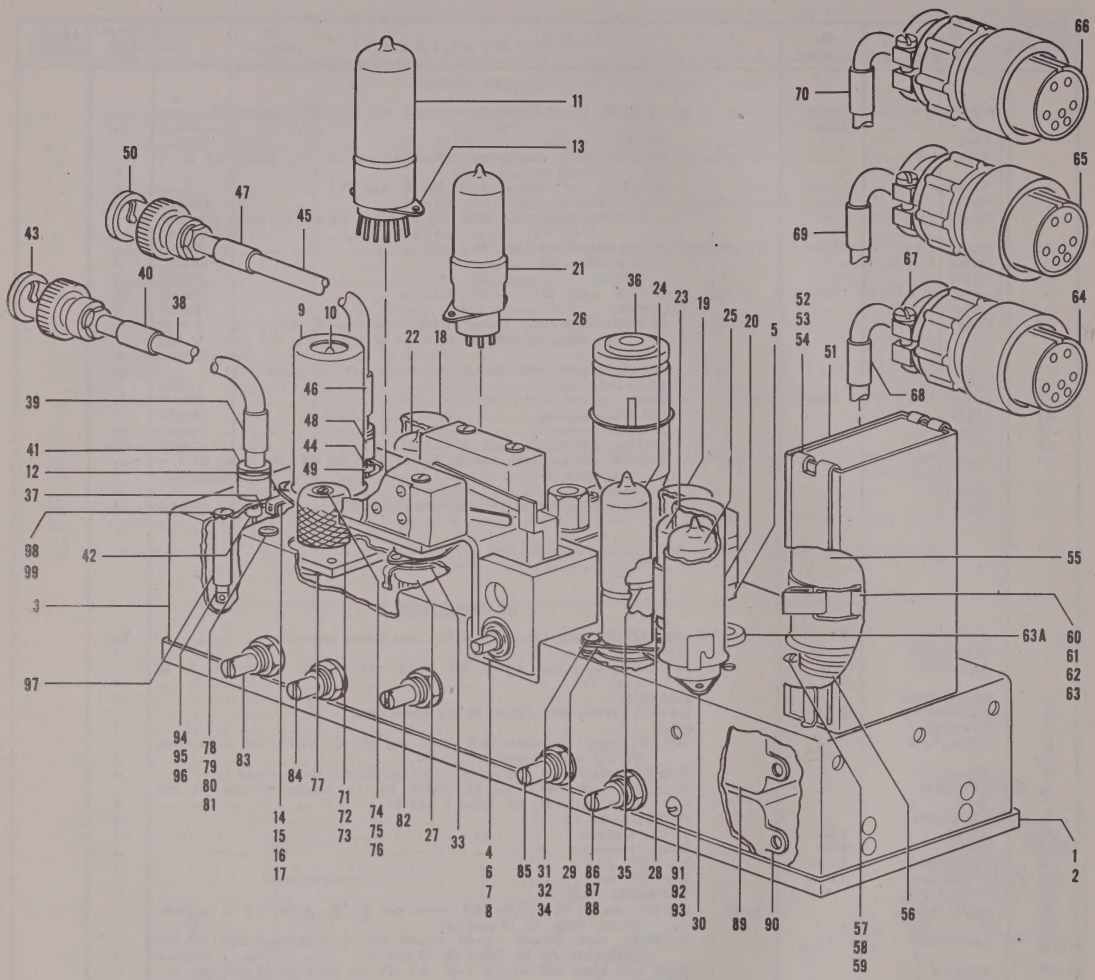

Figure 32. DC Amplifier, Front View (Sheet 1 of 3 sheets, Index Nos. 1 thru 99)

FIG. & INDEX NO.	PART NUMBER	REF SYMBOL	NOMENCLATURE (1 2 3 4 5 6 7)	UNITS PER ASSY	APPLI-CATION
			DC AMPLIFIER (Cont)		
32-41	D102B	—	. . . . HANGER, cable ..... (Industrial Prod Co)	1	
-42	K7874681P1	—	. . . . CAP	1	
-43	UG260/U	P705	. . . . CONNECTOR, plug	1	
	ML7400979G2	W708	. . . CABLE ASSEMBLY, RF	1	
-44	AN936B516B	—	. . . WASHER, lock: bronze, tinned; round, 5/16 in; shakeproof-type, tw ext teeth (Att. Pt.)	1	
-45	RG71/U	—	. . . . CABLE, RF: 16 in lg	1	
-46	NP136186R	—	. . . . MARKER, cable	1	
-47	NP137425C	—	. . . . MARKER, cable	1	
-48	D102B	—	. . . . HANGER, cable ..... (Industrial Prod Co)	1	
-49	K7874681P1	—	. . . . CAP	1	
-50	UG260/U	P709	. . . . CONNECTOR, plug	1	
-51	CP70B1FF605K	C721	. . . CAPACITOR fixed	1	
-52	CPO7SB6	—	. . . CLAMP (Att. Pt.)	2	

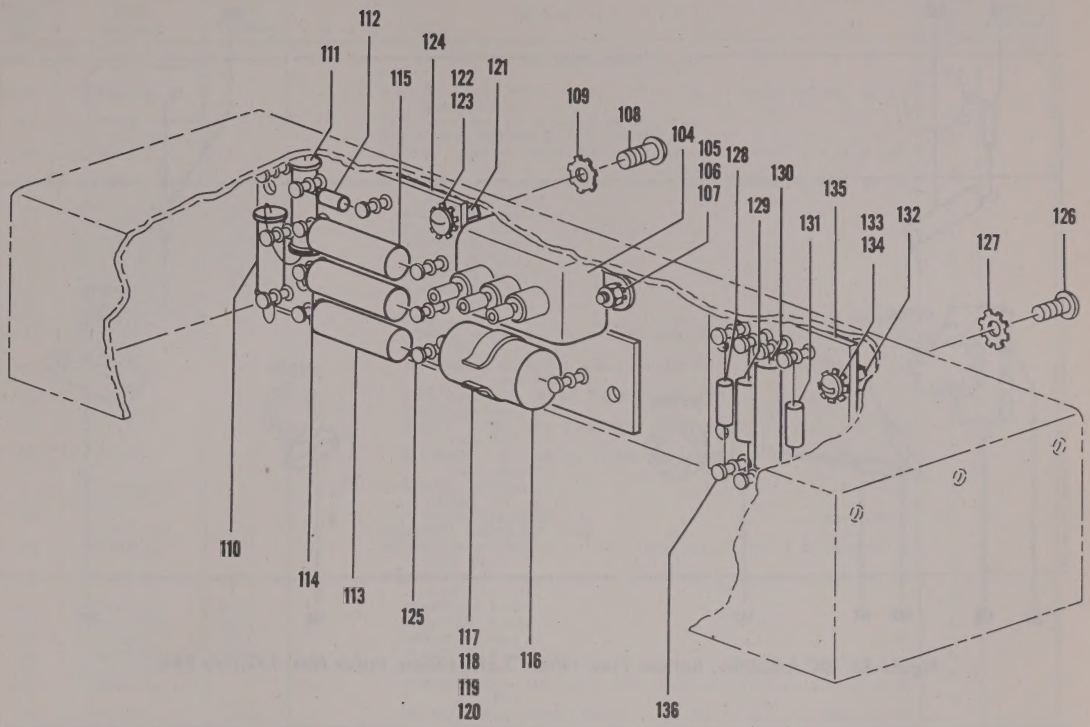

Figure 32. DC Amplifier, Front View (Sheet 2 of 3 sheets, Index Nos. 104 thru 136)

FIG. & INDEX NO.	PART NUMBER	REF SYMBOL	1 2 3 4 5 6 7 NOMENCLATURE	UNITS PER ASSY	APPLI-CATION
			DC AMPLIFIER (Cont)		
32–53	AN345–10	—	. . . NUT, hex: steel, cad pl; No. 10–32 (Att. Pt.)	2	
–54	AN936B10B	—	. . . WASHER, lock: bronze, tinned; round, No. 10; shakeproof-type, tw ext teeth (Att. Pt.)	2	
–55	SK5161	K705	. . . RELAY, armature (Clare CP)	1	
–56	TSB8T101	XK705	. . . SOCKET, tube	1	
–57	AN515–6–5	—	. . . SCREW, mach: slot drive; RH; steel, cad pl; No. 6–32; 5/16 in lg (Att. Pt.)	2	
–58	AN936B6	—	. . . WASHER, lock: steel, cad pl; round, No. 6; shakeproof-type, tw ext teeth (Att. Pt.)	2	
–59	AN340–6	—	. . . NUT, hex: steel, cad pl; No. 6–32 (Att. Pt.)	2	
–60	926D	—	. . . CLAMP (Birtcher)	1	
–61	AN515–8–5	—	. . . SCREW, mach: slot drive; RH; steel, cad pl; No. 8–32; 5/16 in lg (Att. Pt.)	1	
–62	AN936B8B	—	. . . WASHER, lock: bronze, tinned; round, No. 8; shakeproof-type, tw ext teeth (Att. Pt.)	1	
–63	AN340–8	—	. . . NUT, hex: steel, cad pl; No. 8–32 (Att. Pt.)	1	
–63A	M2R53P4	—	. . . GROMMET	1	
–64	AN3106–22–33P	P716	. . . CONNECTOR, plug	1	
–65	AN3106–22–33P	P717	. . . CONNECTOR, plug	1	
–66	AN3106–22–33P	P718	. . . CONNECTOR, plug	1	
–67	AN3057–12	—	. . . CLAMP	3	
–68	NP140089F	—	. . . PLATE, identification	1	
–69	NP140089G	—	. . . PLATE, identification	1	
–70	NP140089H	—	. . . PLATE, identification	1	
–71	B7408835P1	—	. . . NUT, lock	1	
–72	10061	—	. . . COLLET (Millen)	1	
–73	AN936A616B	—	. . . WASHER, lock: bronze, tinned; round, 3/8 in; shakeproof-type, tw int teeth (Att. Pt.)	1	
–74	P7768146P1	R734	. . . RESISTOR, variable	1	
–75	K7870535	—	. . . NUT, hex (Att. Pt.)	1	
–76	AN936A616B	—	. . . WASHER, lock: bronze, tinned; round, 3/8 in; shakeproof-type, tw int teeth (Att. Pt.)	1	

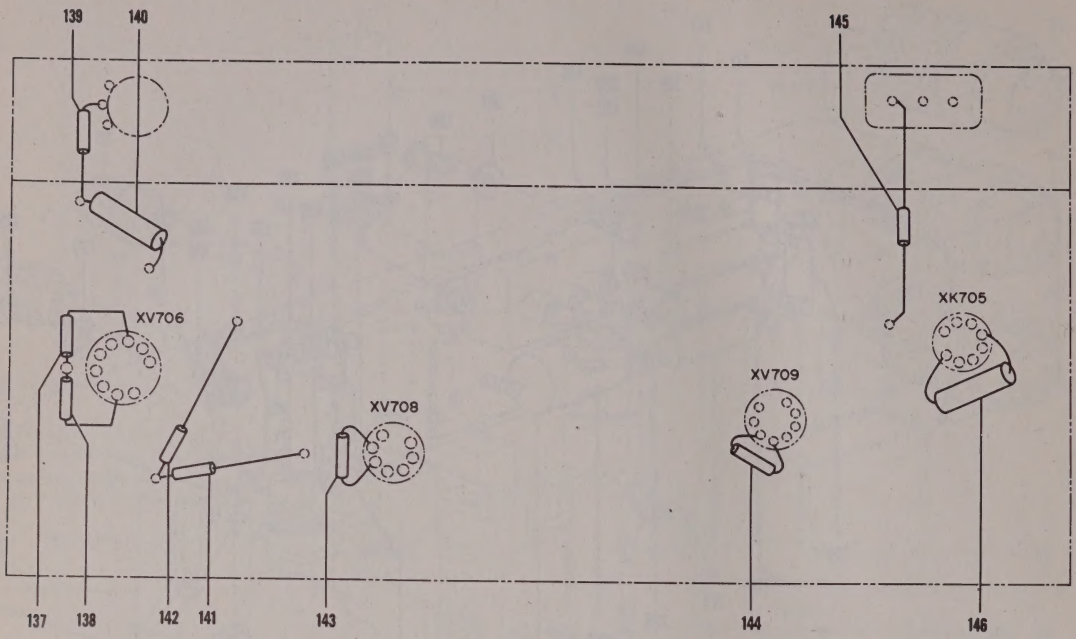

Figure 32. DC Amplifier, Bottom View (Sheet 3 of 3 sheets, Index Nos. 137 thru 146)

FIG. & INDEX NO.	PART NUMBER	REF SYMBOL	1 2 3 4 5 6 7 NOMENCLATURE	UNITS PER ASSY	APPLI-CATION
			DC AMPLIFIER (Cont)		
32–77	K7000072P1	—	. . . MOUNTING, resistor	1	
–78	AN515–6–6	—	. . . SCREW, mach: slot drive; RH; steel, cad pl; No. 6–32; 3/8 in lg (Att. Pt.)	3	
–79	Coml	—	. . . WASHER, flat: brass, cad pl; round, 5/32 in ID, 5/16 in OD, 0.032 in thk (Att. Pt.) (Wrought Washer)	6	
–80	AN936B6B	—	. . . WASHER, lock: bronze, tinned; round, No. 6; shakeproof-type, tw ext teeth (Att. Pt.)	3	
–81	AN340–6	—	. . . NUT, hex: steel, cad pl; No. 6–32 (Att. Pt.)	3	
–82	P7770998P11	S711	. . . SWITCH, rotary	1	
–83	P7770835P9	R723	. . . RESISTOR, variable	1	
–84	P7770835P22	R733	. . . RESISTOR, variable	1	
–85	P7768146P4	R739	. . . RESISTOR, variable	1	
–86	P7768146P5	R742	. . . RESISTOR, variable	1	
–87	K7870535	—	. . . NUT, hex (Att. Pt. for items 82 thru 86)	5	
–88	AN936A616B	—	. . . WASHER, lock: bronze, tinned; 3/8 in; shakeproof-type, tw int teeth (Att. Pt. for items 82 thru 86)	5	
–89	CP54B4FG104V	C720	. . . CAPACITOR, fixed	1	
–90	CP54B4FG104V	C722	. . . CAPACITOR, fixed	1	
–91	AN515–6–4	—	. . . SCREW, mach: slot drive; RH; steel, cad pl; No. 6–32; 1/4 in lg (Att. Pt. for items 89 and 90)	4	
–92	AN936B6B	—	. . . WASHER, lock: bronze, tinned; round, No. 6; shakeproof-type, tw ext teeth (Att. Pt. for items 89 and 90)	4	
–93	AN340–6	—	. . . NUT, hex: steel, cad pl; No. 6–32 (Att. Pt. for items 89 and 90)	4	
–94	K7878455P1	—	. . . TERMINAL, lug	8	
–95	AN515–6–4	—	. . . SCREW, mach: slot drive; RH; steel, cad pl; No. 6–32; 1/4 in lg (Att. Pt.)	6	
–96	AN936B6B	—	. . . WASHER, lock: bronze, tinned; round, No. 6; shakeproof-type, tw ext teeth (Att. Pt.)	6	
–97	M7462416P3	—	. . . INSULATOR, standoff	6	
–98	AN515–6–4	—	. . . SCREW, mach: slot drive; RH; steel, cad pl; No. 6–32; 1/4 in lg (Att. Pt.)	6	
–99	AN936B6B	—	. . . WASHER, lock: bronze, tinned; round, No. 6; shakeproof-type, tw ext teeth (Att. Pt.)	6	
✦ –104	CP54B4FF503V	C717	. . . CAPACITOR, fixed	1	
–105	AN515–6–4	—	. . . SCREW, mach: slot drive; RH; steel, cad pl; No. 6–32; 1/4 in lg (Att. Pt.)	2	

FIG. & INDEX NO.	PART NUMBER	REF SYMBOL	NOMENCLATURE 1 2 3 4 5 6 7	UNITS PER ASSY	APPLI-CATION
			DC AMPLIFIER (Cont)		
32–106	AN936B6B	—	. . . WASHER, lock: bronze, tinned; round, No. 6; shakeproof-type, tw ext teeth (Att. Pt.)	2	
–107	AN340–6	—	. . . NUT, hex: steel, cad pl; No. 6–32 (Att. Pt.)	2	
	ML7400870G1	—	. . . CAPACITOR-RESISTOR SUBASSEMBLY	1	
–108	AN515–6–3	—	. . . SCREW, mach: slot drive; RH; steel, cad pl; No. 6–32; 3/16 in lg (Att. Pt.)	4	
–109	AN936B6B	—	. . . WASHER, lock: bronze, tinned; round, No. 6; shakeproof-type, tw ext teeth (Att. Pt.)	4	
–110	M7474401P48	R724	. . . . RESISTOR, fixed	1	
–111	M7474401P48	R722	. . . . RESISTOR, fixed	1	
–112	RC20BF103J	R735	. . . . RESISTOR, fixed	1	
–113	RC40BF333J	R730	. . . . RESISTOR, fixed	1	
–114	RC40BF333J	R731	. . . . RESISTOR, fixed	1	
–115	RC40BF333J	R732	. . . . RESISTOR, fixed	1	
–116	CP26A1EG103K	C719	. . . . CAPACITOR, fixed	1	
–117	TH17	—	. . . . CLIP (Mallory)	1	
–118	AN515–4–4	—	. . . . SCREW, mach: slot drive; RH; steel, cad pl; No. 4–40; 1/4 in lg (Att. Pt.)	1	
–119	AN936B4B	—	. . . . WASHER, lock: bronze, tinned; round, No. 4; shakeproof-type, tw ext teeth (Att. Pt.)	1	
–120	AN340–4	—	. . . . NUT, hex: steel, cad pl; No. 4–40 (Att. Pt.)	1	
–121	M7480544P8C	—	. . . . POST, spacing	4	
–122	AN515–6–4	—	. . . . SCREW, mach: slot drive; RH; steel, cad pl; No. 6–32; 1/4 in lg (Att. Pt.)	4	
–123	AN936B6B	—	. . . . WASHER, lock: bronze, tinned; round, No. 6; shakeproof-type, tw teeth (Att. Pt.)	4	
	ML7400871G1	—	. . . . BOARD, terminal	1	
–124	M7400871P2	—	. . . . . PANEL	1	
–125	T100–3	—	. . . . . TERMINAL, stud (Bead Chain)	13	
	ML7400879G1	—	. . . RESISTOR ASSEMBLY, fixed	1	
–126	AN515–6–3	—	. . . SCREW, mach: slot drive; RH; steel, cad pl; No. 6–32; 3/16 in lg (Att. Pt.)	4	
–127	AN936B6B	—	. . . WASHER, lock: bronze, tinned; round, No. 6; shakeproof-type, tw ext teeth (Att. Pt.)	4	
–128	RC20BF103J	R737	. . . . RESISTOR, fixed	1	
–129	RC30BF104J	R738	. . . . RESISTOR, fixed	1	
–130	RC40BF154J	R741	. . . . RESISTOR, fixed	1	
–131	RC20BF103J	R740	. . . . RESISTOR, fixed	1	
–132	M7480544P8C	—	. . . . POST, spacing	4	
–133	AN515–6–4	—	. . . . SCREW, mach: slot drive; RH; steel, cad pl; No. 6–32; 1/4 in lg (Att. Pt.)	4	
–134	AN936B6B	—	. . . . WASHER, lock: bronze, tinned; round, No. 6; shakeproof-type, tw ext teeth (Att. Pt.)	4	
	ML7400787G1	—	. . . . BOARD, terminal	1	
–135	M7400878P2	—	. . . . . PANEL	1	
–136	T100–3	—	. . . . . TERMINAL, stud (Bead Chain)	8	
–137	RC20BF103J	R720	. . . RESISTOR, fixed	1	
–138	RC20BF103J	R721	. . . RESISTOR, fixed	1	
–139	RC20BF684J	R725	. . . RESISTOR, fixed	1	
–140	RC30BF334J	R726	. . . RESISTOR, fixed	1	
–141	M7474401P50	R727	. . . RESISTOR, fixed	1	
–142	M7474401P50	R728	. . . RESISTOR, fixed	1	
–143	RC20BF471J	R729	. . . RESISTOR, fixed	1	
–144	RC20BF471J	R736	. . . RESISTOR, fixed	1	
–145	RC20BF104J	R743	. . . RESISTOR, fixed	1	
–146	RC30BF332J	R782	. . . RESISTOR, fixed	1	

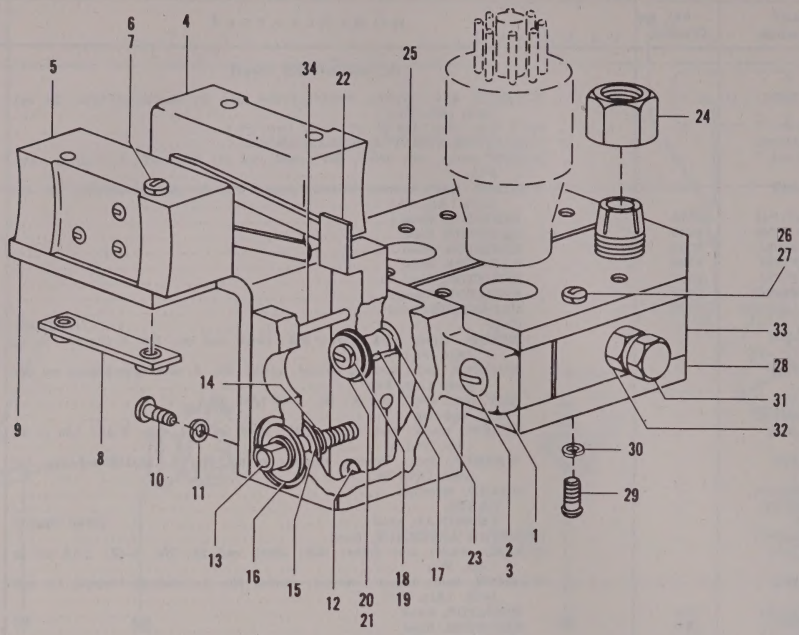

Figure 33. Tuned Cavity

FIG. & INDEX NO.	PART NUMBER	REF SYMBOL	NOMENCLATURE (1 2 3 4 5 6 7)	UNITS PER ASSY	APPLI-CATION
			TUNED CAVITY		
33–	ML7666842G1	E702	. . . TUNED CAVITY (See Figure 32–4 for next higher assembly)	Ref	
–1	P7700348P1	—	. . . . HOUSING	1	
–2	AN520–10–7	—	. . . . SCREW, mach: slot drive; RH; steel, cad pl; No. 10–32; 7/16 in lg (Att. Pt.)	2	
–3	625528	—	. . . . WASHER, lock (Att. Pt.) (Wemco)	2	
–4	SS04A20	S708	. . . . SWITCH, sensitive	1	
–5	SS04A20	S709	. . . . SWITCH, sensitive	1	
–6	AN515–6–18	—	. . . . SCREW, mach: slot drive; RH; steel, cad pl; No. 6–32; 1-1/8 in lg (Att. Pt. for items 4 and 5)	4	
–7	625528	—	. . . . WASHER, lock (Att. Pt. for items 4 and 5) (Wemco)	4	
–8	ML7000360G1	—	. . . . NUT, anchor (Att. Pt. for items 4 and 5)	2	
–9	M7400983P1	—	. . . . MOUNTING, bracket	1	
–10	AN515–4–5	—	. . . . SCREW, mach: slot drive; RH; steel, cad pl; No. 4–40; 5/16 in lg (Att. Pt.)	4	
–11	625527	—	. . . . WASHER, lock (Att. Pt.) (Wemco)	4	
–12	Coml	—	. . . . SCREW, mach: slot drive; Bind H; brass, cad pl; No. 4–40; 1/8 in lg (Amer Screw)	1	
–13	K7000352P1	—	. . . . SCREW, adjustment	1	
–14	V2236852	—	. . . . PIN, cotter (GE)	1	
–15	K7000354P1	—	. . . . WASHER, thrust	1	
–16	K7000356P1	—	. . . . WASHER, spring	1	
–17	K7000357P1	—	. . . . CORE, adjustable tuning	1	
–18	AN515–4–4	—	. . . . SCREW, mach: slot drive; RH; steel, cad pl; No. 4–40; 1/4 in lg (Att. Pt.)	1	
–19	625527	—	. . . . WASHER, lock (Att. Pt.) (Wemco)	1	
–20	Coml	—	. . . . WASHER, flat: SS, passivated; 1/8 in ID, 3/8 in OD, 0.040 in thk (Att. Pt.) (Wrought Washer)	1	
–21	K7000356P1	—	. . . . WASHER, spring (Att. Pt.)	1	
–22	M7400985P1	—	. . . . BAR, switch actuator	1	
–23	K7000350P1	—	. . . . BUSHING	1	
–24	K7000358P1	—	. . . . NUT, lock	4	
–25	P7700347P1	—	. . . . PLATE, top	1	
–26	AN515–4–6	—	. . . . SCREW, mach: slot drive; RH; steel, cad pl; No. 4–40; 3/8 in lg (Att. Pt.)	8	
–27	625527	—	. . . . WASHER, lock (Att. Pt.) (Wemco)	8	
–28	P7700346P1	—	. . . . PLATE, bottom	1	

FIG. & INDEX NO.	PART NUMBER	REF SYMBOL	NOMENCLATURE 1 2 3 4 5 6 7	UNITS PER ASSY	APPLI-CATION
			TUNED CAVITY (Cont)		
33–29	AN515–4–5	—	. . . . SCREW, mach: slot drive; RH; steel, cad pl; No. 4–40; 5/16 in lg (Att. Pt.)	8	
–30	625527	—	. . . . WASHER, lock (Att. Pt.) (Wemco)	8	
–31	K7000359P1	—	. . . . SCREW, adjustment	3	
–32	K7000351P1	—	. . . . NUT, hex	3	
–33	ML7700349G1	—	. . . . CAVITY, tuned	1	
–34	T7666842P31	—	. . . . GUIDE, shaft	1	
			AFC SERVO AMPLIFIER		
34–	ML7666812G1	—	. . AFC SERVO AMPLIFIER (See Figure 28–217 for next higher assembly)	Ref	
–1	ML7400889G1	—	. . . COVER	1	
–2	AN515–6–7	—	. . . SCREW, mach: slot drive; RH; steel, cad pl; No. 6–32; 7/16 in lg (Att. Pt.)	2	
–3	ML7700315G1	—	. . . CHASSIS	1	
–4	T100–3	—	. . . TERMINAL, stud (Bead Chain)	5	
–5	SOS3	—	. . . SHIELD, tube	3	
–6	P7770822P6	—	. . . SHIELD, tube	1	
–7	SOS6	—	. . . SHIELD, tube	1	
–8	6J6	V705	. . . TUBE, electron	1	
–9	6AL5	V703	. . . TUBE, electron	1	
–10	6AK5	V702	. . . TUBE, electron	1	
–11	6AK5	V701	. . . TUBE, electron	1	
–12	SO10M	XV705	. . . SOCKET, tube	1	
–13	SO10M	XV703	. . . SOCKET, tube	1	
–14	SO10M	XV702	. . . SOCKET, tube	1	
–15	SO10M	XV701	. . . SOCKET, tube	1	
–16	K7878455P1	—	. . . TERMINAL, lug	4	
–17	AN515–4–4	—	. . . SCREW, mach: slot drive; RH; steel, cad pl; No. 4–40; 1/4 in lg (Att. Pt. for items 12 thru 16)	8	
–18	AN936B4B	—	. . . WASHER, lock: bronze, tinned; round, No. 4; shakeproof-type, tw ext teeth (Att. Pt. for items 12 thru 16)	8	
–19	1028	—	. . . NUT, anchor (Att. Pt. for items 12 thru 16) (Cinch)	4	
–20	12AX7	V704	. . . TUBE, electron	1	
–21	P7770822P3	XV704	. . . SOCKET, tube	1	
–22	AN515–4–4	—	. . . SCREW, mach: slot drive; RH; steel, cad pl; No. 4–40; 1/4 in lg (Att. Pt.)	2	
–23	AN936B4B	—	. . . WASHER, lock: bronze, tinned; round, No. 4; shakeproof-type, tw ext teeth (Att. Pt.)	2	
–24	AN340–4	—	. . . NUT, hex: steel, cad pl; No. 4–40 (Att. Pt.)	2	
–24A	M7468534P2	—	. . . CAP	1	
–25	UG290/U	J702	. . . CONNECTOR, receptacle	1	
–26	AN520–3–4	—	. . . SCREW, mach: slot drive; RH; steel, cad pl; No. 3–56; 1/4 in lg (Att. Pt. for items 24A and 25)	4	
–27	AN936A3	—	. . . WASHER, lock: steel, cad pl; round, No. 3; shakeproof-type, tw int teeth (Att. Pt. for items 24A and 25)	4	
–28	UG58/U	J701	. . . CONNECTOR, receptacle	1	
–29	UG177/U	—	. . . SHELL, connector	1	
–30	AN515–4–4	—	. . . SCREW, mach: slot drive; RH; steel, cad pl; No. 4–40; 1/4 in lg (Att. Pt. for items 28 and 29)	4	
–31	AN936B4B	—	. . . WASHER, lock: bronze, tinned; round, No. 4; shakeproof-type, tw ext teeth (Att. Pt. for items 28 and 29)	4	
–32	AN340–4	—	. . . NUT, hex: steel, cad pl; No. 4–40 (Att. Pt. for items 28 and 29)	4	
	ML7000087G1	—	. . . RESISTOR ASSEMBLY, fixed	1	
–33	AN515–4–4	—	. . . SCREW, mach: slot drive; RH; steel, cad pl; No. 4–40; 1/4 in lg (Att. Pt.)	2	
–34	AN936B4B	—	. . . WASHER, lock: bronze, tinned; round, No. 4; shakeproof-type, tw ext teeth (Att. Pt.)	2	
–35	P7770419P227	R711	. . . . RESISTOR, fixed	1	
–36	RC30BF473J	R712	. . . . RESISTOR, fixed	1	
–37	RC30BF224J	R714	. . . . RESISTOR, fixed	1	
–38	P7770419P183	R715	. . . . RESISTOR, fixed	1	
–39	M7480544P5P	—	. . . . POST, spacing	2	
–40	AN515–4–5	—	. . . . SCREW, mach: slot drive; RH; steel, cad pl; No. 4–40; 5/16 in lg (Att. Pt.)	2	
–41	AN936B4B	—	. . . . WASHER, lock: bronze, tinned; round, No. 4; shakeproof-type, tw ext teeth (Att. Pt.)	2	
	ML7000085G1	—	. . . . BOARD, terminal	1	
–42	K7000085P2	—	. . . . . PANEL	1	
–43	T100–3	—	. . . . . TERMINAL, stud (Bead Chain)	8	
–44	M7481469P1	—	. . . NUT, lock	2	
–45	10061	—	. . . COLLET (Millen)	2	
–46	P7768146P4	R713	. . . RESISTOR, variable	1	
–47	P7770835P9	R709	. . . RESISTOR, variable	1	
–48	K7868592P1	—	. . . NUT, hex (Att. Pt. for items 46 and 47)	1	
–49	1920–2	—	. . . WASHER, lock (Att. Pt. for items 46 and 47) (Shakeproof)	4	
–50	ST22N	S710	. . . SWITCH, toggle	1	

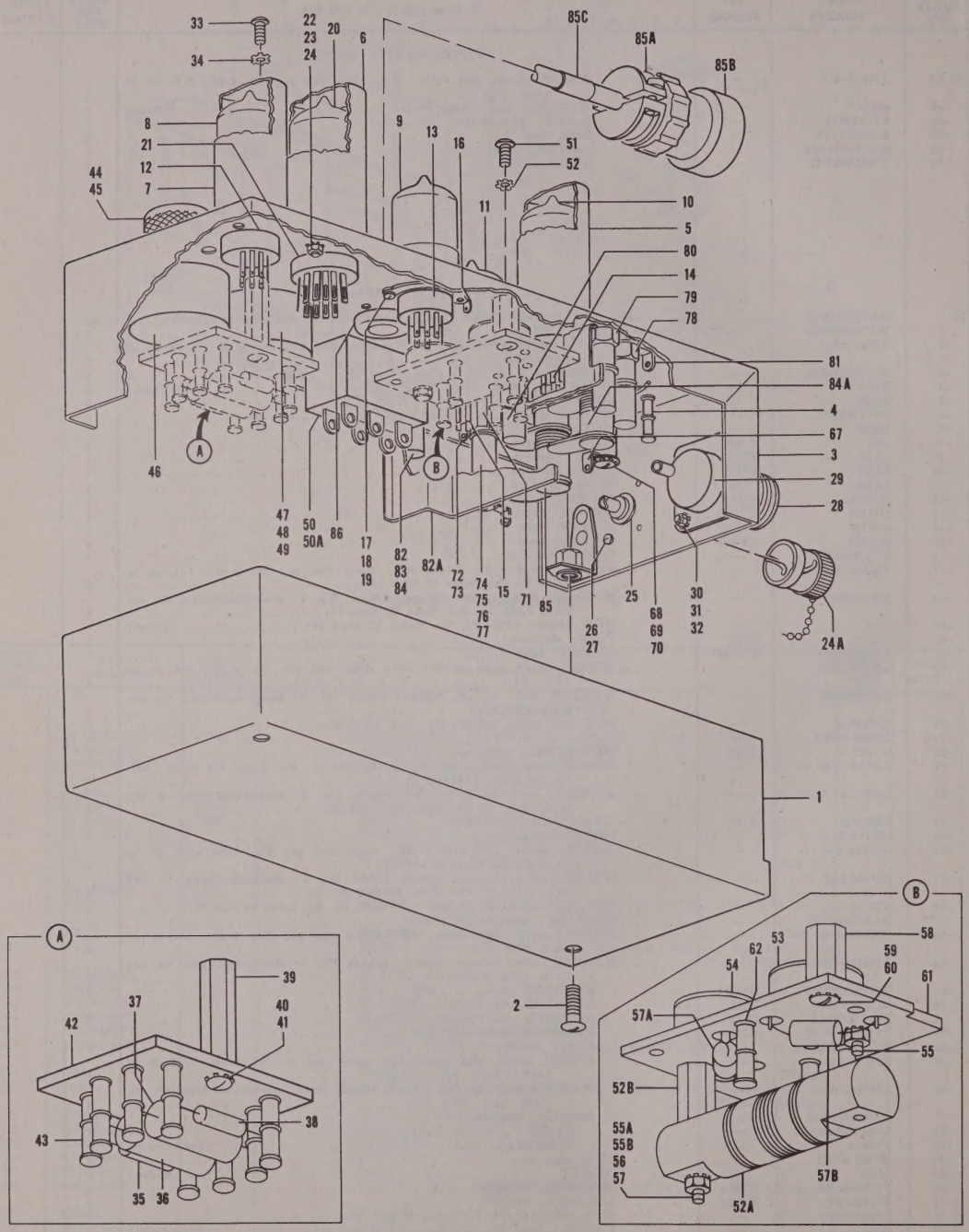

Figure 34. AFC Servo Amplifier, Bottom-Front View (Sheet 1 of 2 sheets, Index Nos. 1 thru 86)

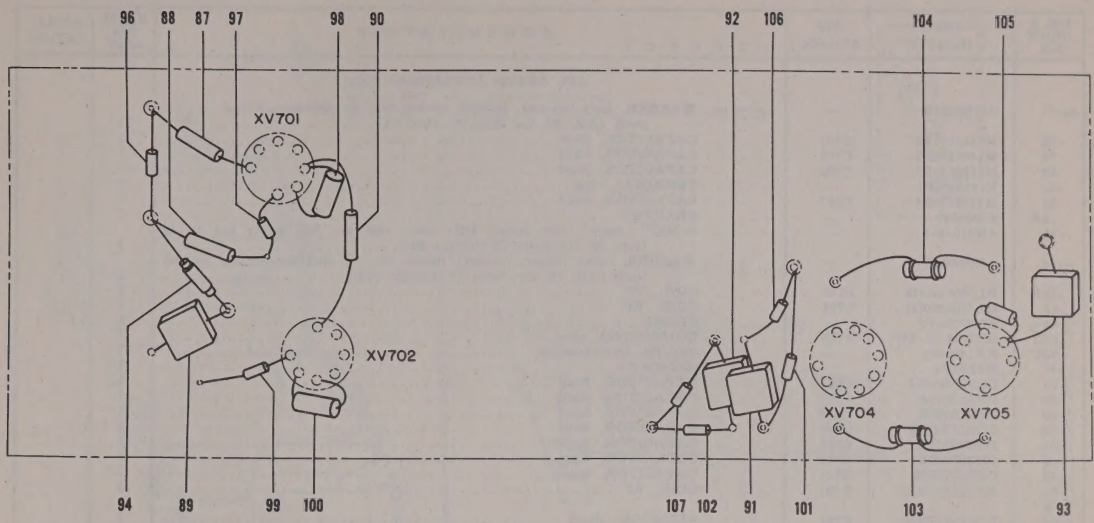

Figure 34. AFC Servo Amplifier, Bottom View (Sheet 2 of 2 sheets, Index Nos. 87 thru 107)

FIG. & INDEX NO.	PART NUMBER	REF SYMBOL	1 2 3 4 5 6 7 NOMENCLATURE	UNITS PER ASSY	APPLI-CATION
			AFC SERVO AMPLIFIER (Cont)		
34–50A	Coml	—	. . . WASHER, lock: steel, cad pl; round, 15/32 in; shakeproof-type, tw ext teeth (Att. Pt.) (Shakeproof)	1	
	ML7000207G1	—	. . . CAPACITOR-RESISTOR SUBASSEMBLY	1	
–51	AN515–4–4	—	. . . SCREW, mach: slot drive; RH; steel, cad pl; No. 4–40; 1/4 in lg (Att. Pt.)	3	
–52	AN936B4B	—	. . . WASHER, lock: bronze, tinned; round, No. 4; shakeproof-type, tw ext teeth (Att. Pt.)	3	
–52A	ML7407556G1	T701	. . . . TRANSFORMER	1	
–52B	M7480544P4D	—	. . . . SPACER	2	
–53	CV11B130	C710	. . . . CAPACITOR, variable	1	
–54	CV11B130	C711	. . . . CAPACITOR, variable	1	
–55	AN515–4–7	—	. . . . SCREW, mach: slot drive; RH; steel, cad pl; No. 4–40; 7/16 in lg (Att. Pt. for items 53 and 54)	2	
–55A	AN515–4–20	—	. . . . SCREW, mach: slot drive; RH; steel, cad pl; No. 4–40; 1-1/4 in lg (Att. Pt. for items 52A thru 54)	2	
–55B	K7872444P1	—	. . . WASHER, flat (Att. Pt. for items 52A thru 54)	4	
–56	AN936B4B	—	. . . . WASHER, lock: bronze, tinned; round, No. 4; shakeproof-type, tw ext teeth (Att. Pt. for items 52A thru 54)	4	
–57	AN340–4	—	. . . . NUT, hex: steel, cad pl; No. 4–40 (Att. Pt. for items 52A thru 54)	4	
–57A	CC26UJ560G	C747	. . . . CAPACITOR, fixed	1	
–57B	CC21UJ407K	C746	. . . . CAPACITOR, fixed	1	
–58	M7480544P5D	—	. . . . POST, spacing	3	
–59	AN515–4–4	—	. . . . SCREW, mach: slot drive; RH; steel, cad pl; No. 4–40; 1/4 in lg (Att. Pt.)	3	
–60	AN936B4B	—	. . . . WASHER, lock: bronze, tinned; round, No. 4; shakeproof-type, tw ext teeth (Att. Pt.)	3	
	ML7400931G1	—	. . . . BOARD, terminal	1	
–61	M7400931P2	—	. . . . . PANEL	1	
–62	T100–3	—	. . . . . TERMINAL, stud (Bead Chain)	3	
✦					
–67	K7878455P1	—	. . . TERMINAL, lug	13	
–68	K7872445	—	. . . WASHER, flat	12	
–69	AN515–6–4	—	. . . SCREW, mach: slot drive; RH; steel, cad pl; No. 6–32; 1/4 in lg (Att. Pt. for items 67 and 68)	12	
–70	AN936B6B	—	. . . WASHER, lock: bronze, tinned; round, No. 6; shakeproof-type, tw ext teeth (Att. Pt. for items 67 and 68)	12	
–71	M7480544P8C	—	. . . POST spacing	1	
–72	K7878455P1	—	. . . TERMINAL, lug	1	
–73	K7872445	—	. . . WASHER, flat	12	
–74	M7462416P9	—	. . . INSULATOR, standoff	12	
–75	Coml	—	. . . SCREW, mach: slot drive; RH; brass, cad pl; No. 6–32; 9/16 in lg (Att. Pt. for items 71 thru 74) (Amer Screw)	1	
–76	AN515–6–4	—	. . . SCREW, mach: slot drive; RH; steel, cad pl; No. 6–32; 1/4 in lg (Att. Pt. for items 73 and 74)	11	

FIG. & INDEX NO.	PART NUMBER	REF SYMBOL	NOMENCLATURE 1 2 3 4 5 6 7	UNITS PER ASSY	APPLI-CATION
			AFC SERVO AMPLIFIER (Cont)		
34–77	AN936B6B	—	. . . WASHER, lock: bronze, tinned; round, No. 6; shakeproof-type, tw ext teeth (Att. Pt. for items 71 thru 74)	12	
–78	M7483176P3	C708	. . . CAPACITOR, fixed	1	
–79	M7483176P2	C709	. . . CAPACITOR, fixed	1	
–80	M7483176P2	C705	. . . CAPACITOR, fixed	1	
–81	K7878455P1	—	. . . TERMINAL, lug	3	
–82	M7483176P2	C707	. . . CAPACITOR, fixed	1	
–82A	A7012340	—	. . . BRACKET	1	
–83	AN515–4–4	—	. . . SCREW, mach: slot drive; RH; steel, cad pl; No. 4–40; 1/4 in lg (Att. Pt. for items 78 through 82A)	4	
–84	AN936B4B	—	. . . WASHER, lock: bronze, tinned; round, No. 4; shakeproof-type, tw ext teeth (Att. Pt. for items 78 through 82A)	4	
–84A	ML7009440G2	L703	. . . COIL, RF	1	
–85	ML7000380G8	L702	. . . COIL, RF	1	
–85A	K7887395P6	—	. . . CLAMP	1	
–85B	AN3106–22–33P	P703	. . . CONNECTOR, plug	1	
–85C	NP140046A	—	. . . PLATE, identification	1	
–86	M2R53P4	—	. . . GROMMET	1	
–87	CC26UK101J	C701	. . . CAPACITOR, fixed	1	
–88	CM35B103K	C702	. . . CAPACITOR, fixed	1	
–89	CM35B103K	C703	. . . CAPACITOR, fixed	1	
–90	CC26UK101J	C706	. . . CAPACITOR, fixed	1	
–91	CM35B682M	C712	. . . CAPACITOR, fixed	1	
–92	CM35B682M	C713	. . . CAPACITOR, fixed	1	
–93	CM35B682M	C714	. . . CAPACITOR, fixed	1	
–94	ML7126181G2	L701	. . . COIL, RF	1	
✦					
–96	P7770419P135	R701	. . . RESISTOR, fixed	1	
–97	P7770419P119	R702	. . . RESISTOR, fixed	1	
–98	RC30BF332J	R703	. . . RESISTOR, fixed	1	
–99	P7770419P119	R704	. . . RESISTOR, fixed	1	
–100	RC30BF332J	R705	. . . RESISTOR, fixed	1	
–101	P7770419P239	R706	. . . RESISTOR, fixed	1	
–102	P7770419P239	R707	. . . RESISTOR, fixed	1	
–103	P7474401P48	R708	. . . RESISTOR, fixed	1	
–104	P7474401P48	R710	. . . RESISTOR, fixed	1	
–105	RC20BF471J	R744	. . . RESISTOR, fixed	1	
–106	P7770419P239	R766	. . . RESISTOR, fixed	1	
–107	P7770419P239	R767	. . . RESISTOR, fixed	1	
			RECEIVER CONTROL C–596/CPS–6B		
35–	ML7352793G1	—	. RECEIVER CONTROL C–596/CPS–6B (See Figures 2–15, 3–15, 4–17, 5 and 6 for next higher assembly)	Ref	
–1	K7126123P1	—	. . SCREW, captive	6	
–2	K7128235P2	—	. . BUSHING	6	
–3	T7664896P1	—	. . CHASSIS	1	
–4	ML7666705G1	—	. . IF AMPLIFIER AM–305/CPS–6B (See Figure 36 for breakdown)	1	
–5	AN520–10–8	—	. . SCREW, mach: slot drive; RH; steel, cad pl; No. 10–32; 1/2 in lg (Att. Pt.)	6	
–6	AN936B10B	—	. . WASHER, lock: bronze, tinned; round, No. 10; shakeproof-type, tw ext teeth (Att. Pt.)	6	
–7	AN3108–28–2S	P301	. . CONNECTOR, plug	1	
–8	K7887395P7	—	. . CLAMP, CABLE	1	
–9	UG260/U	P304	. . CONNECTOR, plug	1	
–10	UG260/U	P303	. . CONNECTOR, plug	1	
–11	P7771869P1	—	. . PANEL	1	
–12	AN520B10–8	—	. . SCREW, mach: slot drive; RH; brass, black oxidized; No. 10–32; 1/2 in lg (Att. Pt.)	8	
–13	AN936B10B	—	. . WASHER, lock: bronze, tinned; round, No. 10; shakeproof-type, tw ext teeth (Att. Pt.)	8	
–14	AN345–10	—	. . NUT, hex: steel, cad pl; No. 10–32 (Att. Pt.)	8	
–15	K7002870P1	—	. . HANDLE	2	
–16	K7002869P1	—	. . WASHER, extruded	4	
–17	AN345–10	—	. . NUT, hex: steel, cad pl; No. 10–32 (Att. Pt. for items 15 and 16)	4	
–18	AN936B10B	—	. . WASHER, lock: bronze, tinned; round, No. 10; shakeproof-type, tw ext teeth (Att. Pt. for items 15 and 16)	4	
–19	801002–511	XI2201	. . LIGHT, indicator (Dialco)	1	
–20	Coml	I2201	. . LAMP, incandescent: Mazda 6S6, 115 v, 6 w	1	
–21	UG262/U	J2206	. . CONNECTOR, receptacle	1	
–22	UG262/U	J2205	. . CONNECTOR, receptacle	1	
–23	UG414/U	J2207	. . CONNECTOR, receptacle	1	
–24	M7468534P2	—	. . CAP AND CHAIN SUBASSEMBLY	3	
–25	AN520B3–6	—	. . SCREW, mach: slot drive; RH; brass, black oxidized; No. 3–56; 3/8 in lg (Att. Pt. for items 21 and 24)	12	
–26	1203	—	. . WASHER, lock (Att. Pt. for items 21 thru 24) (Shakeproof)	12	
–27	MR26W100DCUA	M2201	. . METER, ammeter	1	
–28	NP136185A	—	. . PLATE, identification	1	
–29	AN515–4–4	—	. . SCREW, mach: slot drive; RH; steel, cad pl; No. 4–40; 1/4 in lg (Att. Pt. for items 27 and 28)	3	
–30	1904	—	. . WASHER, lock (Att. Pt. for items 27 and 28) (Shakeproof)	3	

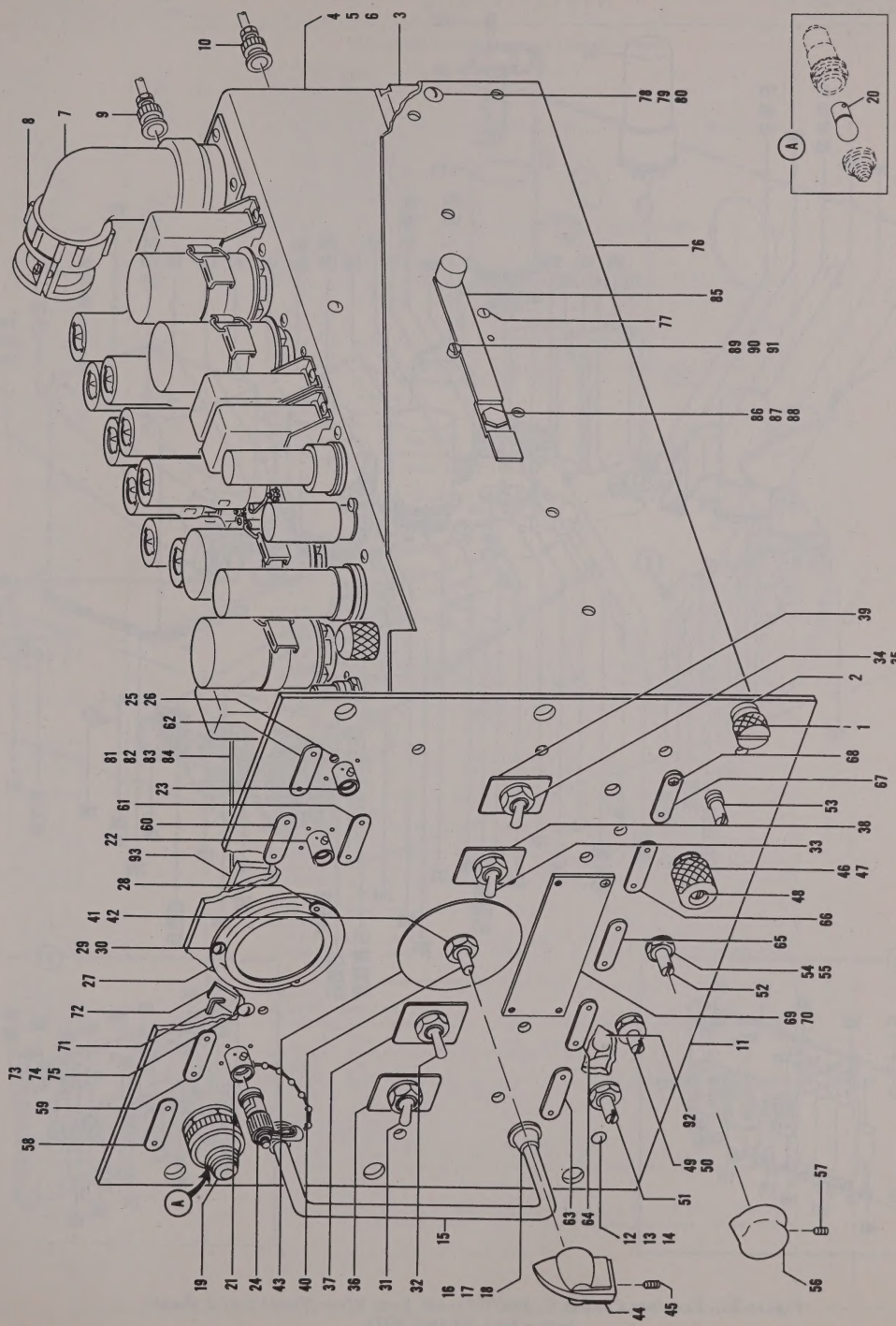

Figure 35. Receiver Control C–596/CPS–6B, Front View (Sheet 1 of 2 sheets, Index Nos. 1 thru 93)

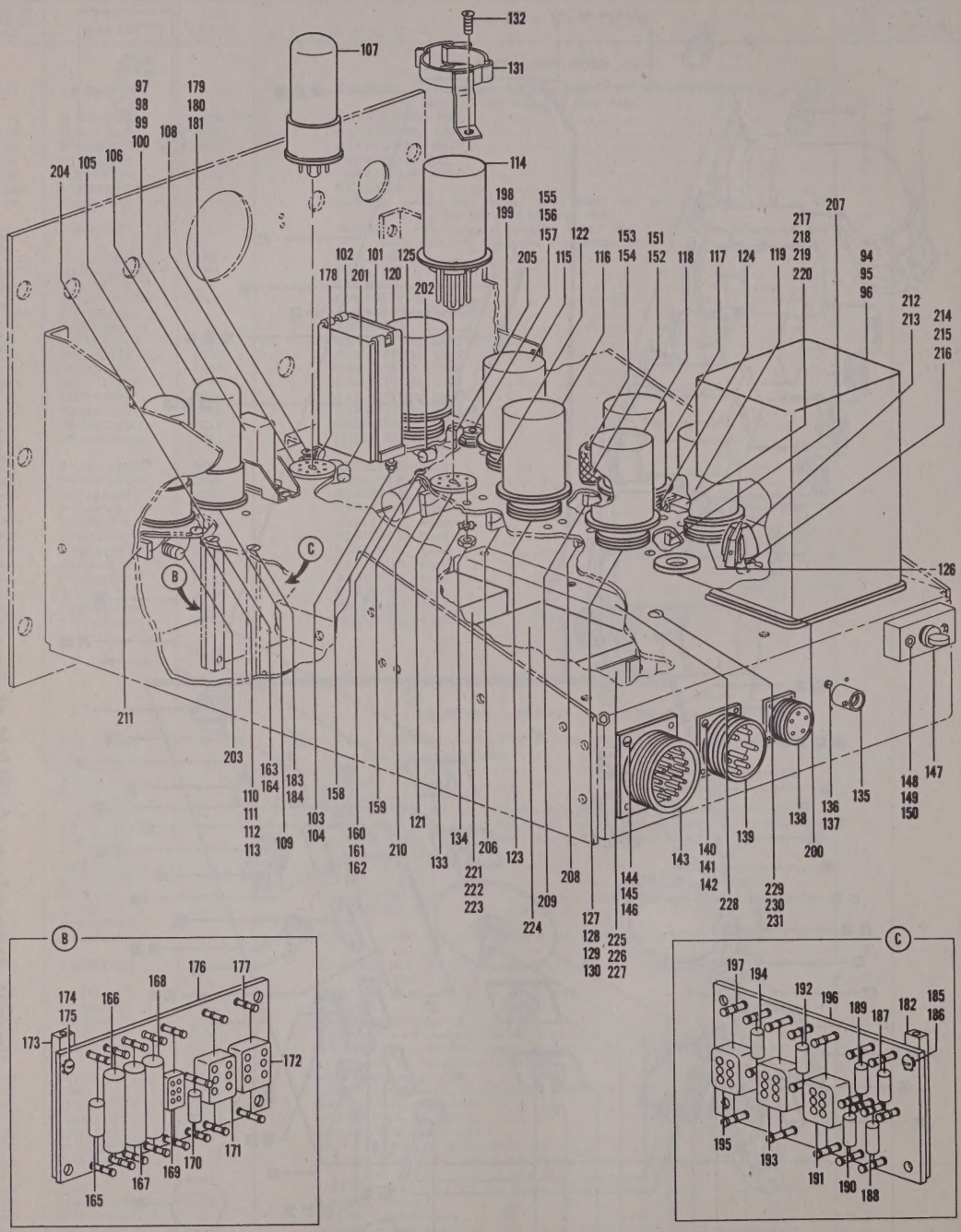

Figure 35. Receiver Control C–596/CPS–6B, Rear View (Sheet 2 of 2 sheets, Index Nos. 94 thru 231)

FIG. & INDEX NO.	PART NUMBER	REF SYMBOL	NOMENCLATURE 1 2 3 4 5 6 7	UNITS PER ASSY	APPLI-CATION
			RECEIVER CONTROL C–596/CPS–6B (Cont)		
35–31	ST22N	S2201	. . SWITCH, toggle	1	
–32	ST22N	S2202	. . SWITCH, toggle	1	
–33	ST52P	S2204	. . SWITCH, toggle	1	
–34	ST22N	S2203	. . SWITCH, toggle	1	
–35	1222–1	—	. . WASHER, lock (Att. Pt. for items 31 thru 34) (Shakeproof)	8	
–36	NP125976B	—	. . PLATE, identification	1	
–37	NP125977	—	. . PLATE, identification	1	
–38	NP125976D	—	. . PLATE, identification	1	
–39	NP125976E	—	. . PLATE, identification	1	
–40	P7770998P7	S2205	. . SWITCH, rotary	1	
–41	K7870535	—	. . NUT, hex (Att. Pt.)	1	
–42	AN936A616B	—	. . WASHER, lock: bronze, tinned; round, 3/8 in; shakeproof-type, tw int teeth (Att. Pt.)	1	
–43	NP125975	—	. . PLATE, identification	1	
–44	K7886574P2	—	. . KNOB	1	
–45	Coml	—	. . SCREW, set: Bristo six-spline drive; headless; steel, cad pl; No. 8–32; 1/4 in lg; cup point (Att. Pt.) (Bristolco)	1	
–46	M7481469P1	—	. . NUT, lock	2	
–47	10061	—	. . COLLET (Millen)	2	
–48	RA20A2SD500AK	R2201	. . RESISTOR, variable	1	
–49	P7768146P5	R2203	. . RESISTOR, variable	1	
–50	AN936A616B	—	. . WASHER, lock: bronze, tinned; round, 3/8 in; shakeproof-type, tw int teeth (Att. Pt. for items 48 and 49)	4	
–51	P7768146P1	R2206	. . RESISTOR, variable	1	
–52	P7770835P22	R2210	. . RESISTOR, variable	1	
–53	P7770835P17	R2212	. . RESISTOR, variable	1	
–54	K7870535	—	. . NUT, hex (Att. Pt. for items 52 and 53)	2	
–55	AN936A616B	—	. . WASHER, lock: bronze, tinned; round, 3/8 in; shakeproof-type, tw int teeth (Att. Pt. for items 51, 52 and 53)	3	
–56	M7478617P1	—	. . KNOB	3	
–57	Coml	—	. . SCREW, set: Bristo six-spline drive; headless; steel, cad pl; No. 8–32; 1/4 in lg; cup point (Att. Pt.) (Bristolco)	6	
–58	NP125992C	—	. . PLATE, identification	1	
–59	NP125992G	—	. . PLATE, identification	1	
–60	NP125992D	—	. . PLATE, identification	1	
–61	NP125992E	—	. . PLATE, identification	1	
–62	NP125992F	—	. . PLATE, identification	1	
–63	NP125992H	—	. . PLATE, identification	1	
–64	NP125992J	—	. . PLATE, identification	1	
–65	NP125992K	—	. . PLATE, identification	1	
–66	NP125992L	—	. . PLATE, identification	1	
–67	NP125992M	—	. . PLATE, identification	1	
–68	Coml	—	. . SCREW, self-tapping: Phillips drive; Bind H; SS, black oxidized; No. 4–40; 3/16 in lg (Att. Pt for items 58 thru 67) (Shakeproof)	20	
–69	NP140019B	—	. . PLATE, identification	1	
–70	Coml	—	. . SCREW, self-tapping: Phillips drive; RH; SS; No. 4–40; 3/16 in lg (Att. Pt.) (Shakeproof)	4	
–71	K7876451P1	—	. . WRENCH	1	
–72	K7126174P1	—	. . HOLDER, wrench	1	
–73	AN515B4–6	—	. . SCREW, mach: slot drive; RH; brass, black oxidized; No. 4–40; 3/8 in lg (Att. Pt.)	2	
–74	AN936B4B	—	. . WASHER, lock: bronze, tinned; round, No. 4; shakeproof-type, tw ext teeth (Att. Pt.)	2	
–75	AN340–4	—	. . NUT, hex: steel, cad pl; No. 4–40 (Att. Pt.)	2	
–76	T7664897P2	—	. . GUSSET	1	
–77	AN510–10–8	—	. . SCREW, mach: slot drive; FH; steel, cad pl; No. 10–32; 1/2 in lg (Att. Pt.)	1	
–78	AN520–10–8	—	. . SCREW, mach: slot drive; RH; steel, cad pl; No. 10–32; 1/2 in lg (Att. Pt.)	8	
–79	AN936B10B	—	. . WASHER, lock: bronze, tinned; round, No. 10; shakeproof-type, tw ext teeth (Att. Pt.)	9	
–80	AN345–10	—	. . NUT, hex: steel, cad pl; No. 10–32 (Att. Pt.)	9	
–81	T7664897P1	—	. . GUSSET	1	
–82	AN520–10–8	—	. . SCREW, mach: slot drive; RH; steel, cad pl; No. 10–32; 1/2 in lg (Att. Pt.)	9	
–83	AN936B10B	—	. . WASHER, lock: bronze, tinned; round, No. 10; shakeproof-type, tw ext teeth (Att. Pt.)	9	
–84	AN345–10	—	. . NUT, hex: steel, cad pl; No. 10–32 (Att. Pt.)	9	
–85	K7005399P1	—	. . PLATE, catch	1	
–86	K7003070P1	—	. . SCREW, mach (Att. Pt.)	1	
–87	AN936B10B	—	. . WASHER, lock: bronze, tinned; round, No. 10; shakeproof-type, tw ext teeth (Att. Pt.)	1	
–88	AN345–10	—	. . NUT, hex: steel, cad pl; No. 10–32 (Att. Pt.)	1	
–89	K7003069	—	. . SCREW, mach	2	
–90	AN936B6B	—	. . WASHER, lock: bronze, tinned; round, No. 6; shakeproof-type, tw ext teeth	2	
–91	AN340–6	—	. . NUT, hex: steel, cad pl; No. 6–32	2	
–92	RC20BF221J	R2204	. . RESISTOR, fixed	1	
–93	CM20D471J	C2208	. . CAPACITOR, fixed	1	
–94	7480465	T2201	. . TRANSFORMER, power (GE)	1	
–95	AN340–8	—	. . NUT, hex: steel, cad pl; No. 8–32 (Att. Pt.)	4	
–96	AN936B8B	—	. . WASHER, lock: bronze, tinned; round, No. 8; shakeproof-type, tw ext teeth (Att. Pt.)	4	
–97	CP65B1FF254K	C2203	. . CAPACITOR, fixed	1	
–98	AN515–6–6	—	. . SCREW, mach: slot drive; RH; steel, cad pl; No. 6–32; 3/8 in lg (Att. Pt.)	2	
–99	AN936B6B	—	. . WASHER, lock: bronze, tinned; round, No. 6; shakeproof-type, tw ext teeth (Att. Pt.)	2	
–100	AN340–6	—	. . NUT, hex: steel, cad pl; No. 6–32 (Att. Pt.)	2	
–101	CP70B1FF205K	C2204	. . CAPACITOR, fixed	1	

FIG. & INDEX NO.	PART NUMBER	REF SYMBOL	NOMENCLATURE 1 2 3 4 5 6 7	UNITS PER ASSY	APPLI-CATION
			RECEIVER CONTROL C–596/CPS–6B (Cont)		
35–102	CP07SA3	—	. . CLAMP (Att. Pt.)	2	
–103	AN345–10	—	. . NUT, hex: steel, cad pl; No. 10–32 (Att. Pt.)	2	
–104	AN936B10B	—	. . WASHER, lock: bronze, tinned; round, No. 10; shakeproof-type, tw ext teeth (Att. Pt.)	2	
–105	6SL7W	V2203	. . TUBE, electron	1	
–106	6X5/GT	V2201	. . TUBE, electron	1	
–107	6SN7W	V2202	. . TUBE, electron	1	
–108	TSB8T101	XV2202	. . SOCKET, tube	1	
–109	TSB8T101	XV2201	. . SOCKET, tube	1	
–110	TSB8T101	XV2203	. . SOCKET, tube	1	
–111	AN515–6–6	—	. . SCREW, mach: slot drive; RH; steel, cad pl; No. 6–32; 3/8 in lg (Att. Pt. for items 108, 109 and 110)	6	
–112	AN936B6B	—	. . WASHER, lock: bronze, tinned; round, No. 6; shakeproof-type, tw ext teeth (Att. Pt. for items 108, 109 and 110)	6	
–113	AN340–6	—	. . NUT, hex: steel, cad pl; No. 6–32 (Att. Pt. for items 108, 109 and 110)	6	
–114	SK5001	K2207	. . RELAY, armature (Clare CP)	1	
–115	SK5001	K2201	. . RELAY, armature (Clare CP)	1	
–116	SK5001	K2203	. . RELAY, armature (Clare CP)	1	
–117	SK5001	K2206	. . RELAY, armature (Clare CP)	1	
–118	SK5001	K2205	. . RELAY, armature (Clare CP)	1	
–119	SK5001	K2204	. . RELAY, armature (Clare CP)	1	
–120	SK5001	K2202	. . RELAY, armature (Clare CP)	1	
–121	TSB8T101	XK2207	. . SOCKET, tube	1	
–122	TSB8T101	XK2201	. . SOCKET, tube	1	
–123	TSB8T101	XK2203	. . SOCKET, tube	1	
–124	TSB8T101	XK2206	. . SOCKET, tube	1	
–125	TSB8T101	XK2202	. . SOCKET, tube	1	
–126	TSB8T101	XK2204	. . SOCKET, tube	1	
–127	TSB8T101	XK2205	. . SOCKET, tube	1	
–128	AN515–6–6	—	. . SCREW, mach: slot drive; RH; steel, cad pl; No. 6–32; 3/8 in lg (Att. Pt. for items 121 and 127)	14	
–129	AN936B6B	—	. . WASHER, lock: bronze, tinned; round, No. 6; shakeproof-type, tw ext teeth (Att. Pt. for items 121 thru 127)	14	
–130	AN340–6	—	. . NUT, hex: steel, cad pl; No. 6–32 (Att. Pt. for items 121 thru 127)	14	
–131	926D	—	. . CLAMP (Birtcher)	7	
–132	AN515–8–6	—	. . SCREW, mach: slot drive; RH; steel, cad pl; No. 8–32; 3/8 in lg (Att. Pt.)	7	
–133	AN936B8B	—	. . WASHER, lock: bronze, tinned; round, No. 8; shakeproof-type, tw ext teeth (Att. Pt.)	7	
–134	AN340–8	—	. . NUT, hex: steel, cad pl; No. 8–32 (Att. Pt.)	7	
–135	UG262/U	J2204	. . CONNECTOR, receptacle	1	
–136	AN520–3–6	—	. . SCREW, mach: slot drive; RH; steel, cad pl; No. 3–52; 3/8 in lg (Att. Pt.)	4	
–137	AN936A3	—	. . WASHER, lock: steel, cad pl; round, No. 3; shakeproof-type, tw int teeth (Att. Pt.)	4	
–138	AN3102–14S5S	J2203	. . CONNECTOR, receptacle	1	
–139	AN3102–22–33P	J2201	. . CONNECTOR, receptacle	1	
–140	AN515–4–6	—	. . SCREW, mach: slot drive; RH; steel, cad pl; No. 4–40; 3/8 in lg (Att. Pt. for items 138 and 139)	8	
–141	AN936B4B	—	. . WASHER, lock: bronze, tinned; round, No. 4; shakeproof-type, tw ext teeth (Att. Pt. for items 138 and 139)	8	
–142	AN340–4	—	. . NUT, hex: steel, cad pl; No. 4–40 (Att. Pt. for items 138 and 139)	8	
–143	AN3102–28–2P	J2202	. . CONNECTOR, receptacle	1	
–144	AN515–6–6	—	. . SCREW, mach: slot drive; RH; steel, cad pl; No. 6–32; 3/8 in lg (Att. Pt.)	4	
–145	AN936B6B	—	. . WASHER, lock: bronze, tinned; round, No. 6; shakeproof-type, tw ext teeth (Att. Pt.)	4	
–146	AN340–6	—	. . NUT, hex: steel, cad pl; No. 6–32 (Att. Pt.)	4	
–147	ML7460330G5	S2707B	. . SWITCH, interlock	1	
–148	AN515–6–10	—	. . SCREW, mach: slot drive; RH; steel, cad pl; No. 6–32; 5/8 in lg (Att. Pt.)	2	
–149	AN936B6B	—	. . WASHER, lock: bronze, tinned; round, No. 6; shakeproof-type, tw ext teeth (Att. Pt.)	2	
–150	AN340–6	—	. . NUT, hex: steel, cad pl; No. 6–32 (Att. Pt.)	2	
–151	M7481469P1	—	. . NUT, lock	1	
–152	10061	—	. . COLLET (Millen)	1	
–153	P7768146P30	R2222	. . RESISTOR, variable	1	
–154	AN936A616B	—	. . WASHER, lock: bronze, tinned; round, 3/8 in; shakeproof-type, tw int teeth (Att. Pt.)	2	
–155	K7109613P3	J2208	. . CONNECTOR, receptacle	1	
–156	K7870535	—	. . NUT, hex (Att. Pt.)	1	
–157	AN936A616B	—	. . WASHER, lock: bronze, tinned; round, 3/8 in; shakeproof-type, tw int teeth (Att. Pt.)	1	
–158	CP28A1EF104K	C2216	. . CAPACITOR, fixed	1	
–159	TH17	—	. . CLIP (Mallory)	1	
–160	AN515–4–6	—	. . SCREW, mach: slot drive; RH; steel, cad pl; No. 4–40; 3/8 in lg (Att. Pt.)	1	
–161	AN936B4B	—	. . WASHER, lock: bronze, tinned; round, No. 4; shakeproof-type, tw ext teeth (Att. Pt.)	1	
–162	AN340–4	—	. . NUT, hex: steel, cad pl; No. 4–40 (Att. Pt.)	1	
	ML7129235G1	—	. . CAPACITOR-RESISTOR SUBASSEMBLY	1	
–163	AN505–8–6	—	. . SCREW, mach: slot drive; FH; steel, cad pl; No. 8–32; 3/8 in lg (Att. Pt.)	2	
–164	AN936C8B	—	. . WASHER, lock: bronze, tinned; round, No. 8; shakeproof-type, tw csk teeth (Att. Pt.)	2	
–165	RC30BF683J	R2221	. . . RESISTOR, fixed	1	
–166	RC40BF333J	R2211	. . . RESISTOR, fixed	1	
–167	RC40BF682J	R2208	. . . RESISTOR, fixed	1	
–168	RC40BF682J	R2207	. . . RESISTOR, fixed	1	
–169	CM20D471J	C2205	. . . CAPACITOR, fixed	1	
–170	RC20BF220J	R2202	. . . RESISTOR, fixed	1	

FIG. & INDEX NO.	PART NUMBER	REF SYMBOL	NOMENCLATURE 1 2 3 4 5 6 7	UNITS PER ASSY	APPLI-CATION
			RECEIVER CONTROL C–596/CPS–6B (Cont)		
35–171	CM30D222J	C2202	. . . CAPACITOR, fixed	1	
–172	CM30D222J	C2201	. . . CAPACITOR, fixed	1	
	ML7129236G1	—	. . . BOARD, terminal	1	
–173	K7001064P1	—	. . . . POST, supporting	2	
–174	AN515–8–6	—	. . . . SCREW, mach: slot drive; RH; steel, cad pl; No. 8–32; 3/8 in lg (Att. Pt.)	4	
–175	AN936B8B	—	. . . . WASHER, lock: bronze, tinned; round, No. 8; shakeproof-type, tw ext teeth (Att. Pt.)	4	
–176	K7129236P2	—	. . . . PANEL	1	
–177	T100–3	—	. . . . TERMINAL, stud (Bead Chain)	16	
–178	D97B	—	. . HANGER, cable (Industrial Prod Co)	3	
–179	AN515–4–6	—	. . SCREW, mach: slot drive; RH; steel, cad pl; No. 4–40; 3/8 in lg (Att. Pt.)	3	
–180	AN936B4B	—	. . WASHER, lock: bronze, tinned; round, No. 4; shakeproof-type, tw ext teeth (Att. Pt.)	3	
–181	AN340–4	—	. . NUT, hex: steel, cad pl; No. 4–40 (Att. Pt.)	3	
–182	K7001064P1	—	. . POST, supporting	2	
–183	AN505–8–6	—	. . SCREW, mach: slot drive; FH; steel, cad pl; No. 8–32; 3/8 in lg (Att. Pt.)	2	
–184	AN936C8B	—	. . WASHER, lock: bronze, tinned; round, No. 8; shakeproof-type, tw csk teeth (Att. Pt.)	2	
	ML7129239G1	—	. . CAPACITOR-RESISTOR SUBASSEMBLY	1	
–185	AN515–8–6	—	. . SCREW, mach: slot drive; RH; steel, cad pl; No. 8–32; 3/8 in lg (Att. Pt.)	4	
–186	AN936B8B	—	. . WASHER, lock: bronze, tinned; round, No. 8; shakeproof-type, tw ext teeth (Att. Pt.)	4	
–187	RC20BF154J	R2220	. . . RESISTOR, fixed	1	
–188	RC20BF221J	R2219	. . . RESISTOR, fixed	1	
–189	RC20BF334J	R2213	. . . RESISTOR, fixed	1	
–190	RC20BF684J	R2218	. . . RESISTOR, fixed	1	
–191	CM35B103K	C2214	. . . CAPACITOR, fixed	1	
–192	RC20BF105J	R2217	. . . RESISTOR, fixed	1	
–193	CM35B103K	C2213	. . . CAPACITOR, fixed	1	
–194	RC20BF105J	R2214	. . . RESISTOR, fixed	1	
–195	CM35B103K	C2212	. . . CAPACITOR, fixed	1	
	ML7129238G1	—	. . . BOARD, terminal	1	
–196	K7129238P2	—	. . . . PANEL	1	
–197	T100–3	—	. . . . TERMINAL, stud (Bead Chain)	18	
–198	NP140019B	—	. . PLATE, identification	1	
–199	Coml	—	. . SCREW, self-tapping: Phillips drive; RH; SS; No. 4–40; 3/16 in lg (Att. Pt.) (Shakeproof)	4	
–200	M2R53P14	—	. . GROMMET	1	
–201	RC20BF105J	R2205	. . RESISTOR, fixed	1	
–202	RC20BF472J	R2209	. . RESISTOR, fixed	1	
–203	RC20BF102J	R2215	. . RESISTOR, fixed	1	
–204	RC20BF222J	R2216	. . RESISTOR, fixed	1	
–205	CM20D471J	C2206	. . CAPACITOR, fixed	1	
–206	CM20D471J	C2207	. . CAPACITOR, fixed	1	
–207	CM20D471J	C2209	. . CAPACITOR, fixed	1	
–208	CM20D471J	C2210	. . CAPACITOR, fixed	1	
–209	CM20D471J	C2211	. . CAPACITOR, fixed	1	
–210	CM20D471J	C2215	. . CAPACITOR, fixed	1	
–211	CM30D102J	C2217	. . CAPACITOR, fixed	1	
–212	K7886574P2	—	. . KNOB	1	
–213	Coml	—	. . SCREW, set: Bristo six-spline drive; headless; steel, cad pl; No. 8–32; 1/4 in lg; cup point (Att. Pt.) (Bristolco)	1	
–214	P7703271P4	S2206	. . SWITCH, rotary	1	
–215	K7870535	—	. . NUT, hex (Att. Pt.)	1	
–216	AN936A616B	—	. . WASHER, lock: bronze, tinned; round, 3/8 in; shakeproof-type, tw int teeth (Att. Pt.)	1	
–217	CP54B1FF205K	C2219	. . CAPACITOR, fixed	1	
–218	AN515–8–6	—	. . SCREW, mach: slot drive; RH; steel, cad pl; No. 8–32; 3/8 in lg (Att. Pt.)	2	
–219	AN936B8B	—	. . WASHER, lock: bronze, tinned; round, No. 8; shakeproof-type, tw ext teeth (Att. Pt.)	2	
–220	AN340–8	—	. . NUT, hex: steel, cad pl; No. 8–32 (Att. Pt.)	2	
–221	M7480481P1	L2201	. . REACTOR	1	
–222	AN340–6	—	. . NUT, hex: steel, cad pl; No. 6–32 (Att. Pt.)	4	
–223	AN936B6B	—	. . WASHER, lock: bronze, tinned; round, No. 6; shakeproof-type, tw ext teeth (Att. Pt.)	4	
–224	CP70B1FF805K	C2218	. . CAPACITOR, fixed	1	
–225	CP07SC2	—	. . CLAMP (Att. Pt.)	2	
–226	AN345–10	—	. . NUT, hex: steel, cad pl; No. 10–32 (Att. Pt.)	2	
–227	AN936B10B	—	. . WASHER, lock: bronze, tinned; round, No. 10; shakeproof-type, tw ext teeth (Att. Pt.)	2	
–228	M7405218P1	—	. . BRACKET	1	
–229	AN520–10–7	—	. . SCREW, mach: slot drive; RH; steel, cad pl; No. 10–32; 7/16 in lg (Att. Pt.)	3	
–230	AN936B10B	—	. . WASHER, lock: bronze, tinned; round, No. 10; shakeproof-type, tw ext teeth (Att. Pt.)	3	
–231	AN345–10	—	. . NUT, hex: steel, cad pl; No. 10–32 (Att. Pt.)	3	

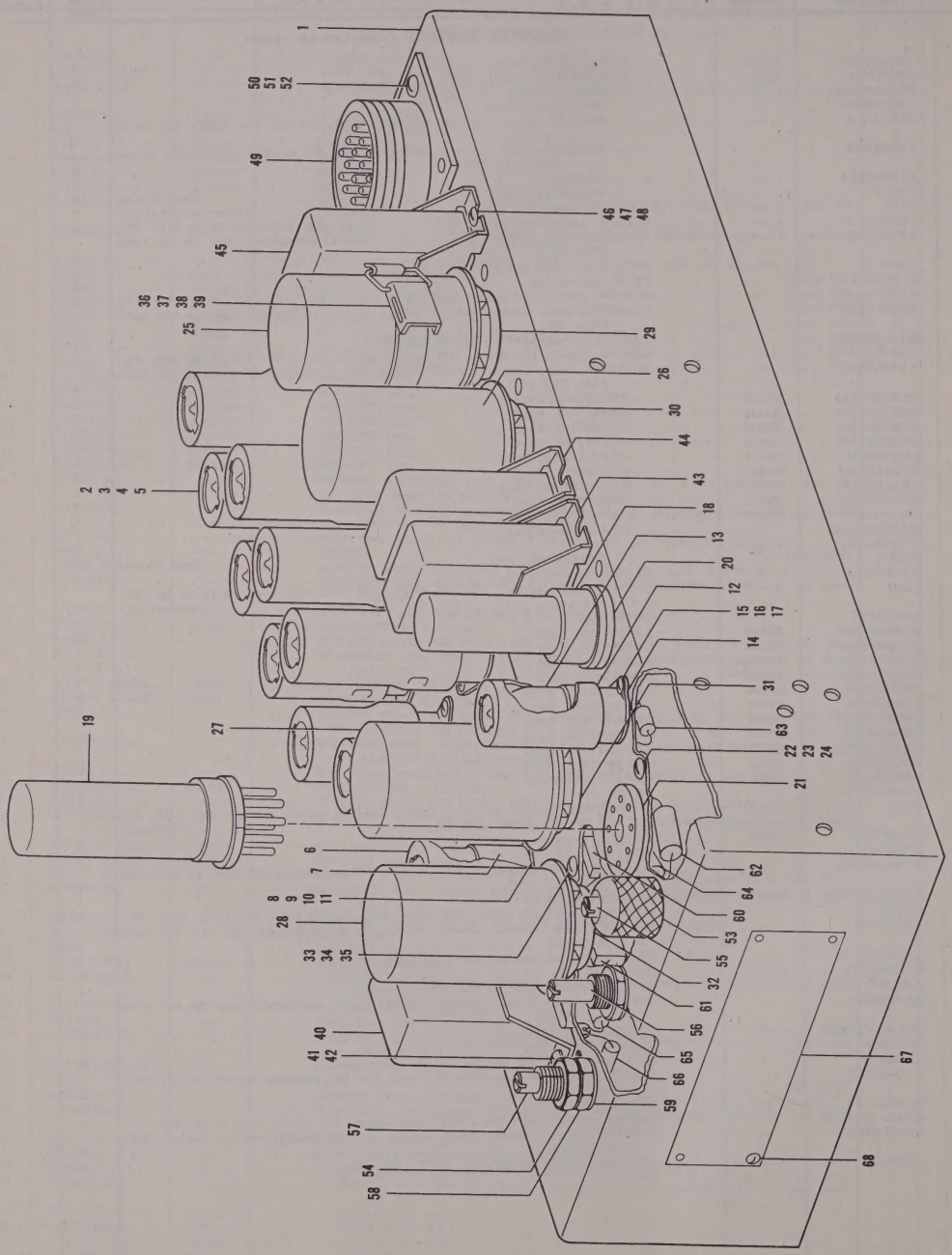

Figure 36. IF Amplifier AM–305/CPS–6B, Front View (Sheet 1 of 2 sheets, Index Nos. 1 thru 68)

FIG. & INDEX NO.	PART NUMBER	REF SYMBOL	NOMENCLATURE 1 2 3 4 5 6 7	UNITS PER ASSY	APPLI-CATION
			IF AMPLIFIER AM–305/CPS–6B		
36–	ML7666705G1	—	. . IF AMPLIFIER AM–305/CPS–6B (See Figure 35–4 for next higher assembly)	Ref	
–1	ML7666742G1	—	. . . CHASSIS	1	
–2	ML7771862G1	—	. . . AMPLIFIER, IF (See Figure 37 for breakdown)	1	
–3	AN515–8–5	—	. . . SCREW, mach: slot drive; RH; steel, cad pl; No. 8–32; 5/16 in lg (Att. Pt.)	4	
–4	AN936B8B	—	. . . WASHER, lock: bronze, tinned; round, No. 8; shakeproof-type, tw ext teeth (Att. Pt.)	4	
–5	AN340–8	—	. . . NUT, hex: steel, cad pl; No. 8–32 (Att. Pt.)	4	
–6	P7770822P6	—	. . . SHIELD, tube	1	
–7	12AT7	V310	. . . TUBE, electron	1	
–8	P7770822P3	XV310	. . . SOCKET, tube	1	
–9	AN515–4–5	—	. . . SCREW, mach: slot drive; RH; steel, cad pl; No. 4–40; 5/16 in lg (Att. Pt.)	2	
–10	AN936B4B	—	. . . WASHER, lock: bronze, tinned; round, No. 4; shakeproof-type, tw ext teeth (Att. Pt.)	2	
–11	AN340–4	—	. . . NUT, hex: steel, cad pl; No. 4–40 (Att. Pt.)	2	
–12	SOS6	—	. . . SHIELD, tube	1	
–13	6AL5	V312	. . . TUBE, electron	1	
–14	SO10M	XV312	. . . SOCKET, tube	1	
–15	AN515–4–5	—	. . . SCREW, mach: slot drive; RH; steel, cad pl; No. 4–40; 5/16 in lg (Att. Pt.)	2	
–16	AN936B4B	—	. . . WASHER, lock: bronze, tinned; round, No. 4; shakeproof-type, tw ext teeth (Att. Pt.)	2	
–17	AN340–4	—	. . . NUT, hex: steel, cad pl; No. 4–40 (Att. Pt.)	2	
–18	6AC7W	V311	. . . TUBE, electron	1	
–19	6AG7	V313	. . . TUBE, electron	1	
–20	TSB8T101	XV311	. . . SOCKET, tube	1	
–21	TSB8T101	XV313	. . . SOCKET, tube	1	
–22	AN515–6–5	—	. . . SCREW, mach: slot drive; RH; steel, cad pl; No. 6–32; 5/16 in lg (Att. Pt. for items 20 and 21)	4	
–23	AN936B6B	—	. . . WASHER, lock: bronze, tinned; round, No. 6; shakeproof-type, tw ext teeth (Att. Pt. for items 20 and 21)	4	
–24	AN340–6	—	. . . NUT, hex: steel, cad pl; No. 6–32 (Att. Pt. for items 20 and 21)	4	
–25	SK5122	K301	. . . RELAY, armature (Clare CP)	1	
–26	SK5123	K304	. . . RELAY, armature (Clare CP)	1	
–27	SK5123	K303	. . . RELAY, armature (Clare CP)	1	
–28	SK5123	K302	. . . RELAY, armature (Clare CP)	1	
–29	TSB8T101	XK301	. . . SOCKET, tube	1	
–30	TSB8T101	XK304	. . . SOCKET, tube	1	
–31	TSB8T101	XK303	. . . SOCKET, tube	1	
–32	TSB8T101	XK302	. . . SOCKET, tube	1	
–33	AN515–6–5	—	. . . SCREW, mach: slot drive; RH; steel, cad pl; No. 6–32; 5/16 in lg (Att. Pt. for items 29 thru 32)	8	
–34	AN936B6B	—	. . . WASHER, lock: bronze, tinned; round, No. 6; shakeproof-type, tw ext teeth (Att. Pt. for items 29 thru 32)	8	
–35	AN340–6	—	. . . NUT, hex: steel, cad pl; No. 6–32 (Att. Pt. for items 29 thru 32)	8	
–36	926D	—	. . . CLAMP (Birtcher)	4	
–37	AN515–8–5	—	. . . SCREW, mach: slot drive; RH; steel, cad pl; No. 8–32; 5/16 in lg (Att. Pt.)	4	
–38	AN936B8B	—	. . . WASHER, lock: bronze, tinned; round, No. 8; shakeproof-type, tw ext teeth (Att. Pt.)	4	
–39	AN340–8	—	. . . NUT, hex: steel, cad pl; No. 8–32 (Att. Pt.)	4	
–40	CP65B1FF504K	C349	. . . CAPACITOR, fixed	1	
–41	AN515–6–8	—	. . . SCREW, mach: slot drive; RH; steel, cad pl; No. 6–32; 1/2 in lg (Att. Pt.)	2	
–42	K7881617P2	—	. . . BUSHING (Att. Pt.)	4	
–43	CP65B1FF504K	C344	. . . CAPACITOR, fixed	1	
–44	CP65B1FF105K	C347	. . . CAPACITOR, fixed	1	
–45	CP65B6FF104V	C352	. . . CAPACITOR, fixed	1	
–46	AN515–6–5	—	. . . SCREW, mach: slot drive; RH; steel, cad pl; No. 6–32; 5/16 in lg (Att. Pt. for items 43 thru 45)	6	
–47	AN936B6B	—	. . . WASHER, lock: bronze, tinned; round, No. 6; shakeproof-type, tw ext teeth (Att. Pt. for items 40, 43 thru 45)	8	
–48	AN340–6	—	. . . NUT, hex: steel, cad pl; No. 6–32 (Att. Pt. for items 40, 43 thru 45)	8	
–49	AN3102–28–2P	J301	. . . CONNECTOR, receptacle	1	
–50	AN515–6–6	—	. . . SCREW, mach: slot drive; RH; steel, cad pl; No. 6–32; 3/8 in lg (Att. Pt.)	4	
–51	AN936B6B	—	. . . WASHER, lock: bronze, tinned; round, No. 6; shakeproof-type, tw ext teeth (Att. Pt.)	4	
–52	AN340–6	—	. . . NUT, hex: steel, cad pl; No. 6–32 (Att. Pt.)	4	
–53	M7481469P1	—	. . . NUT, lock	3	
–54	10061	—	. . . COLLET (Millen)	3	
–55	P7770835P22	R343	. . . RESISTOR, variable	1	
–56	P7768146P1	R356	. . . RESISTOR, variable	1	
–57	P7768146P4	R355	. . . RESISTOR, variable	1	
–58	K7870535	—	. . . NUT, hex (Att. Pt. for items 55, 56 and 57)	3	
–59	1920–2	—	. . . WASHER, lock (Att. Pt. for items 55, 56 and 57) (Shakeproof)	6	
–60	CM20D471J	C350	. . . CAPACITOR, fixed	1	
–61	CM20D471J	C357	. . . CAPACITOR, fixed	1	
–62	RC30BF223J	R344	. . . RESISTOR, fixed	1	
–63	P7770419P219	R345	. . . RESISTOR, fixed	1	
–64	RC30BF103J	R348	. . . RESISTOR, fixed	1	
–65	P7770419P187	R352	. . . RESISTOR, fixed	1	
–66	P7770419P167	R353	. . . RESISTOR, fixed	1	
–67	NP140019C	—	. . . PLATE, identification	1	

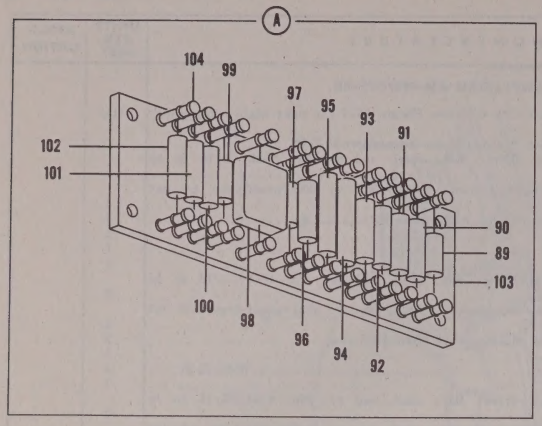

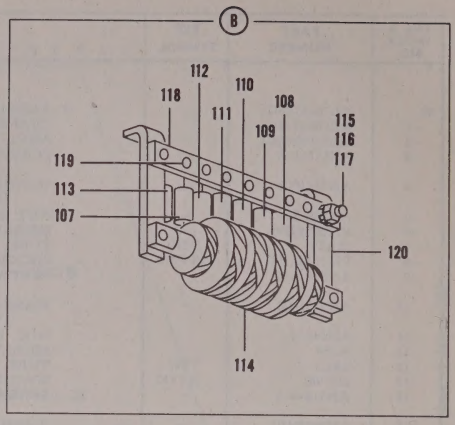

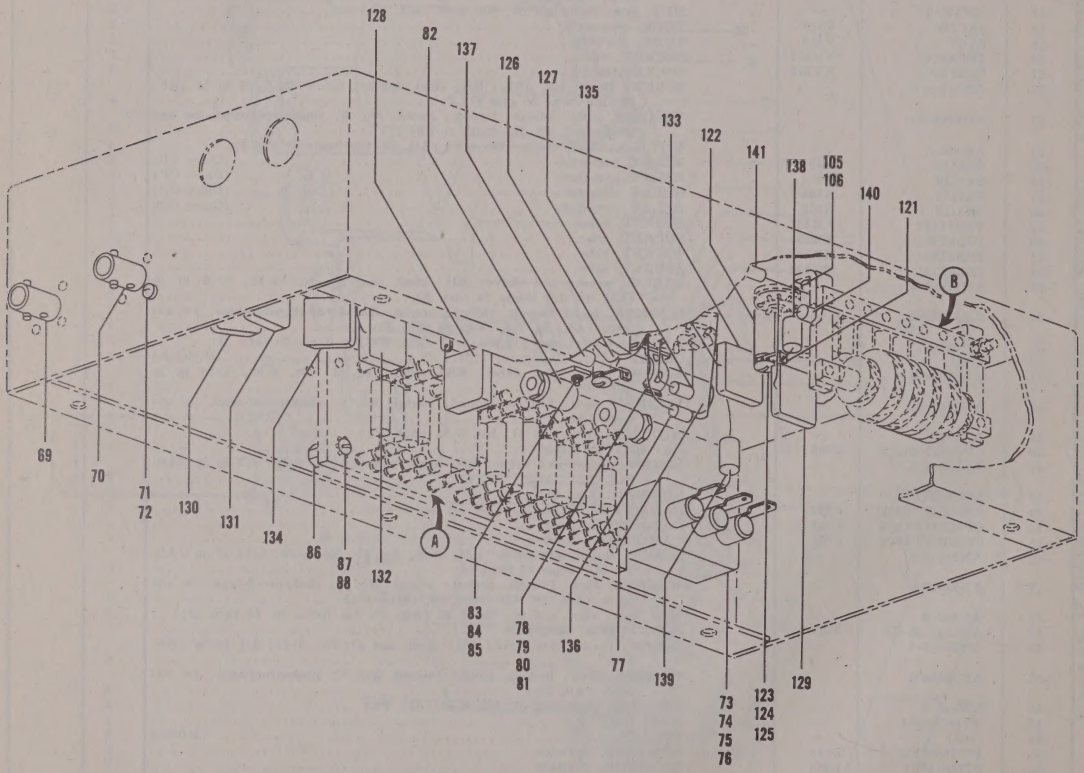

Figure 36. IF Amplifier AM–305/CPS–6B, Bottom-Rear View (Sheet 2 of 2 sheets, Index Nos. 69 thru 141)

FIG. & INDEX NO.	PART NUMBER	REF SYMBOL	1 2 3 4 5 6 7 NOMENCLATURE	UNITS PER ASSY	APPLI-CATION
			IF AMPLIFIER AM–305/CPS–6B (Cont)		
36–68	Coml	—	. . . SCREW, self-tapping: slot drive; RH; SS; No. 4–40; 3/16 in lg (Att. Pt.)	4	
–69	UG262/U	J305	. . . CONNECTOR, receptacle	1	
–70	UG262/U	J303	. . . CONNECTOR, receptacle	1	
–71	AN520–3–4	—	. . . SCREW, mach: slot drive; RH; steel, cad pl; No. 3–56; 1/4 in lg (Att. Pt. for items 69 and 70)	8	
–72	1203	—	. . . WASHER, lock (Att. Pt. for items 69 and 70) (Shakeproof)	8	
–73	CP54B5FF104V	C346	. . . CAPACITOR, fixed	1	
–74	AN515–8–5	—	. . . SCREW, mach: slot drive; RH; steel, cad pl; No. 8–32; 5/16 in lg (Att. Pt.)	2	
–75	AN936B8B	—	. . . WASHER, lock: bronze, tinned; round, No. 8; shakeproof-type, tw ext teeth (Att. Pt.)	2	
–76	AN340–8	—	. . . NUT, hex: steel, cad pl; No. 8–32 (Att. Pt.)	2	
–77	CP26A1EF203K	C345	. . . CAPACITOR, fixed	1	
–78	TH15	—	. . . CLIP (Mallory)	1	
–79	AN515–4–4	—	. . . SCREW, mach: slot drive; RH; steel, cad pl; No. 4–40; 1/4 in lg (Att. Pt.)	1	
–80	AN936B4B	—	. . . WASHER, lock: bronze, tinned; round, No. 4; shakeproof-type, tw ext teeth (Att. Pt.)	1	
–81	AN340–4	—	. . . NUT, hex: steel, cad pl; No. 4–40 (Att. Pt.)	1	
–82	D97B	—	. . . HANGER, cable (Industrial Prod Co)	2	
–83	AN515–4–4	—	. . . SCREW, mach: slot drive; RH; steel, cad pl; No. 4–40; 1/4 in lg (Att. Pt.)	2	
–84	AN936B4B	—	. . . WASHER, lock: bronze, tinned; round, No. 4; shakeproof-type, tw ext teeth (Att. Pt.)	2	
–85	AN340–4	—	. . . NUT, hex: steel, cad pl; No. 4–40 (Att. Pt.)	2	
–86	M7480544P17C	—	. . . POST, spacing	4	
	ML7129224G1	—	. . . CAPACITOR-RESISTOR SUBASSEMBLY	1	
–87	AN515–8–4	—	. . . SCREW, mach: slot drive; RH; steel, cad pl; No. 8–32; 1/4 in lg (Att. Pt. for ML7129224G1 and item 86)	8	
–88	AN936B8B	—	. . . WASHER, lock: bronze, tinned; round, No. 8; shakeproof-type, tw ext teeth (Att. Pt. for ML7129224G1 and item 86)	8	
–89	RC20BF330J	R349	. . . . RESISTOR, fixed	1	
–90	RC30BF102J	R350	. . . . RESISTOR, fixed	1	
–91	RC30BF104J	R346	. . . . RESISTOR, fixed	1	
–92	RC30BF683J	R357	. . . . RESISTOR, fixed	1	
–93	RC30BF333J	R359	. . . . RESISTOR, fixed	1	
–94	RC40BF222J	R340	. . . . RESISTOR, fixed	1	
–95	RC40BF472J	R341	. . . . RESISTOR, fixed	1	
–96	RC30BF683J	R342	. . . . RESISTOR, fixed	1	
–97	RC20BF471J	R336	. . . . RESISTOR, fixed	1	
–98	CM30D102J	C343	. . . . CAPACITOR, fixed	1	
–99	RC20BF104J	R337	. . . . RESISTOR, fixed	1	
–100	RC30BF333J	R360	. . . . RESISTOR, fixed	1	
–101	RC30BF333J	R361	. . . . RESISTOR, fixed	1	
–102	RC30BF333J	R362	. . . . RESISTOR, fixed	1	
	ML7129205G1	—	. . . . BOARD, terminal	1	
–103	K7129205P2	—	. . . . . PANEL	1	
–104	T100–3	—	. . . . . TERMINAL, stud (Bead Chain)	28	
	ML7481904G1	Z304	. . . NETWORK, pulse delay	1	
–105	AN515–6–4	—	. . . SCREW, mach: slot drive; RH; steel, cad pl; No. 6–32; 1/4 in lg (Att. Pt.)	2	
–106	AN936B6B	—	. . . WASHER, lock: bronze, tinned; round, No. 6; shakeproof-type, tw ext teeth (Att. Pt.)	2	
–107	CC21UJ100G	—	. . . . CAPACITOR, fixed	1	
–108	CC21UJ510J	—	. . . . CAPACITOR, fixed	1	
–109	CC21UJ510J	—	. . . . CAPACITOR, fixed	1	
–110	CC21UJ510J	—	. . . . CAPACITOR, fixed	1	
–111	CC21UJ510J	—	. . . . CAPACITOR, fixed	1	
–112	CC21UJ510J	—	. . . . CAPACITOR, fixed	1	
–113	RC20BF222J	—	. . . . RESISTOR, fixed	1	
–114	ML7481903G1	—	. . . . COIL ASSEMBLY, RF	1	
	ML7128216G1	—	. . . . BOARD, terminal	1	
–115	AN515–4–7	—	. . . . SCREW, mach: slot drive; RH; steel, cad pl; No. 4–40; 7/16 in lg (Att. Pt. for item 114 and ML7128216G1)	4	
–116	AN936B4B	—	. . . . WASHER, lock: bronze, tinned; round, No. 4; shakeproof-type, tw ext teeth (Att. Pt. for item 114 and ML7128216G1)	4	
–117	AN340–4	—	. . . . NUT, hex: steel, cad pl; No. 4–40 (Att. Pt. for item 114 and ML7128216G1)	4	
–118	K7128216P2	—	. . . . . PANEL	1	
–119	T100–3	—	. . . . . TERMINAL, stud (Bead Chain)	7	
–120	K7125420P1	—	. . . . BRACKET	2	
–121	K7878455P1	—	. . . TERMINAL, lug	2	
–122	M7462416P9	—	. . . INSULATOR, standoff	2	
–123	K7872445	—	. . . WASHER, flat	4	
–124	AN515–6–4	—	. . . SCREW, mach: slot drive; RH; steel, cad pl; No. 6–32; 1/4 in lg (Att. Pt. for items 121, 122 and 123)	4	
–125	AN936B6B	—	. . . WASHER, lock: bronze, tinned; round, No. 6; shakeproof-type, tw ext teeth (Att. Pt. for items 121, 122 and 123)	4	
–126	CC21UJ510J	C341	. . . CAPACITOR, fixed	1	
–127	CM35B103K	C342	. . . CAPACITOR, fixed	1	
–128	CM30D102J	C348	. . . CAPACITOR, fixed	1	
–129	CM20D471J	C351	. . . CAPACITOR, fixed	1	
–130	CM30D102J	C353	. . . CAPACITOR, fixed	1	
–131	CM30D102J	C354	. . . CAPACITOR, fixed	1	
–132	CM20D471J	C355	. . . CAPACITOR, fixed	1	
–133	CM20D471J	C356	. . . CAPACITOR, fixed	1	

FIG. & INDEX NO.	PART NUMBER	REF SYMBOL	NOMENCLATURE 1 2 3 4 5 6 7	UNITS PER ASSY	APPLI-CATION
			IF AMPLIFIER AM–305/CPS–6B (Cont)		
36–134	CM20D471J	C358	. . . CAPACITOR, fixed	1	
–135	P7770419P195	R338	. . . RESISTOR, fixed	1	
–136	P7770419P223	R339	. . . RESISTOR, fixed	1	
–137	P7770419P171	R335	. . . RESISTOR, fixed	1	
–138	RC30BF472J	R351	. . . RESISTOR, fixed	1	
–139	RC30BF103J	R347	. . . RESISTOR, fixed	1	
–140	P7770419P139	R354	. . . RESISTOR, fixed	1	
–141	P770419P135	R358	. . . RESISTOR, fixed	1	
			IF AMPLIFIER		
37–	ML7771862G1	—	. . . IF AMPLIFIER (See Figure 36–2 for next higher assembly)	Ref	
–1	No Number	—	. . . . CHASSIS (P7771862P2 and E301 thru E313, assembled)	1	
–2	ML7481948G1	—	. . . . COVER SUBASSEMBLY	1	
–3	AN515–6–8	—	. . . . SCREW, mach: slot drive; RH; steel, cad pl; No. 6–32; 1/2 in lg (Att. Pt.)	4	
–4	AN936B6B	—	. . . . WASHER, lock: bronze, tinned; round, No. 6; shakeproof-type, tw ext teeth (Att. Pt.)	4	
–5	SOS3	—	. . . . SHIELD, tube	6	
–6	P7770822P6	—	. . . . SHIELD, tube	8	
–7	6AL5	V309	. . . . TUBE, electron	1	
–8	6AK5	V307	. . . . TUBE, electron	1	
–9	6AK5	V305	. . . . TUBE, electron	1	
–10	6AK5	V303	. . . . TUBE, electron	1	
–11	6AK5	V302	. . . . TUBE, electron	1	
–12	6AK5	V301	. . . . TUBE, electron	1	
–13	12AT7	V308	. . . . TUBE, electron	1	
–14	12AT7	V306	. . . . TUBE, electron	1	
–15	12AT7	V304	. . . . TUBE, electron	1	
–16	P7770822P3	XV308	. . . . SOCKET, tube	1	
–17	P7770822P3	XV306	. . . . SOCKET, tube	1	
–18	P7770822P3	XV304	. . . . SOCKET, tube	1	
–19	SO10M	XV309	. . . . SOCKET, tube	1	
–20	SO10M	XV307	. . . . SOCKET, tube	1	
–21	SO10M	XV305	. . . . SOCKET, tube	1	
–22	SO10M	XV303	. . . . SOCKET, tube	1	
–23	SO10M	XV302	. . . . SOCKET, tube	1	
–24	SO10M	XV301	. . . . SOCKET, tube	1	
–25	AN515–4–4	—	. . . . SCREW, mach: slot drive; RH; steel, cad pl; No. 4–40; 1/4 in lg (Att. Pt. for items 16 thru 24)	18	
–26	AN936B4B	—	. . . . WASHER, lock: bronze, tinned; round, No. 4; shakeproof-type, tw ext teeth (Att. Pt. for items 16 thru 24)	18	
–27	AN340–4	—	. . . . NUT, hex: steel, cad pl; No. 4–40 (Att. Pt. for items 16 thru 24)	18	
–28	UG290/U	J302	. . . . CONNECTOR, receptacle	1	
–29	UG290/U	J304	. . . . CONNECTOR, receptacle	1	
–30	AN520–3–4	—	. . . . SCREW, mach: slot drive; RH; steel, cad pl; No. 3–56; 1/4 in lg (Att. Pt. for items 28 and 29)	8	
–31	AN936A3	—	. . . . WASHER, lock: steel, cad pl; round, No. 3; shakeproof-type, tw int teeth (Att. Pt. for items 28 and 29)	8	
–32	ML7124633G2	L301	. . . . COIL, RF	1	
–33	ML7124633G1	L304	. . . . COIL, RF	1	
–33A	ML7124633G1	L306	. . . . COIL, RF	1	
–34	ML7124633G1	L308	. . . . COIL, RF	1	
–34A	AN936A416	—	. . . . WASHER, lock: steel, cad pl; round, 1/4 in; shakeproof-type, tw ext teeth (Att. Pt. for items 32, 33, 33A and 34) (Shakeproof)	4	
–35	K7124442P2	C360	. . . . CAPACITOR, fixed	1	
–36	K7001403P1	C365	. . . . CAPACITOR, fixed	1	
–37	K7001403P1	C364	. . . . CAPACITOR, fixed	1	
–38	K7001403P1	C363	. . . . CAPACITOR, fixed	1	
–39	K7001403P1	C362	. . . . CAPACITOR, fixed	1	
–40	K7001403P1	C361	. . . . CAPACITOR, fixed	1	
–41	K7001403P1	C332	. . . . CAPACITOR, fixed	1	
–42	K7124442P2	C331	. . . . CAPACITOR, fixed	1	
–43	K7001403P1	C330	. . . . CAPACITOR, fixed	1	
–44	K7001403P1	C324	. . . . CAPACITOR, fixed	1	
–45	K7124442P2	C323	. . . . CAPACITOR, fixed	1	
–46	K7001403P1	C322	. . . . CAPACITOR, fixed	1	
–47	K7001403P1	C316	. . . . CAPACITOR, fixed	1	
–48	K7124442P1	C315	. . . . CAPACITOR, fixed	1	
–49	K7001403P1	C314	. . . . CAPACITOR, fixed	1	
–50	K7001403P1	C311	. . . . CAPACITOR, fixed	1	
–51	K7001403P1	C310	. . . . CAPACITOR, fixed	1	
–52	K7001403P2	C306	. . . . CAPACITOR, fixed	1	
–53	K7001403P1	C304	. . . . CAPACITOR, fixed	1	
–54	K7001403P1	C302	. . . . CAPACITOR, fixed	1	
–55	K7001403P1	C336	. . . . CAPACITOR, fixed	1	
–56	K7124442P2	C366	. . . . CAPACITOR, fixed	1	
–57	K7001403P1	C329	. . . . CAPACITOR, fixed	1	
–58	K7001403P1	C328	. . . . CAPACITOR, fixed	1	
–59	K7124442P2	C367	. . . . CAPACITOR, fixed	1	

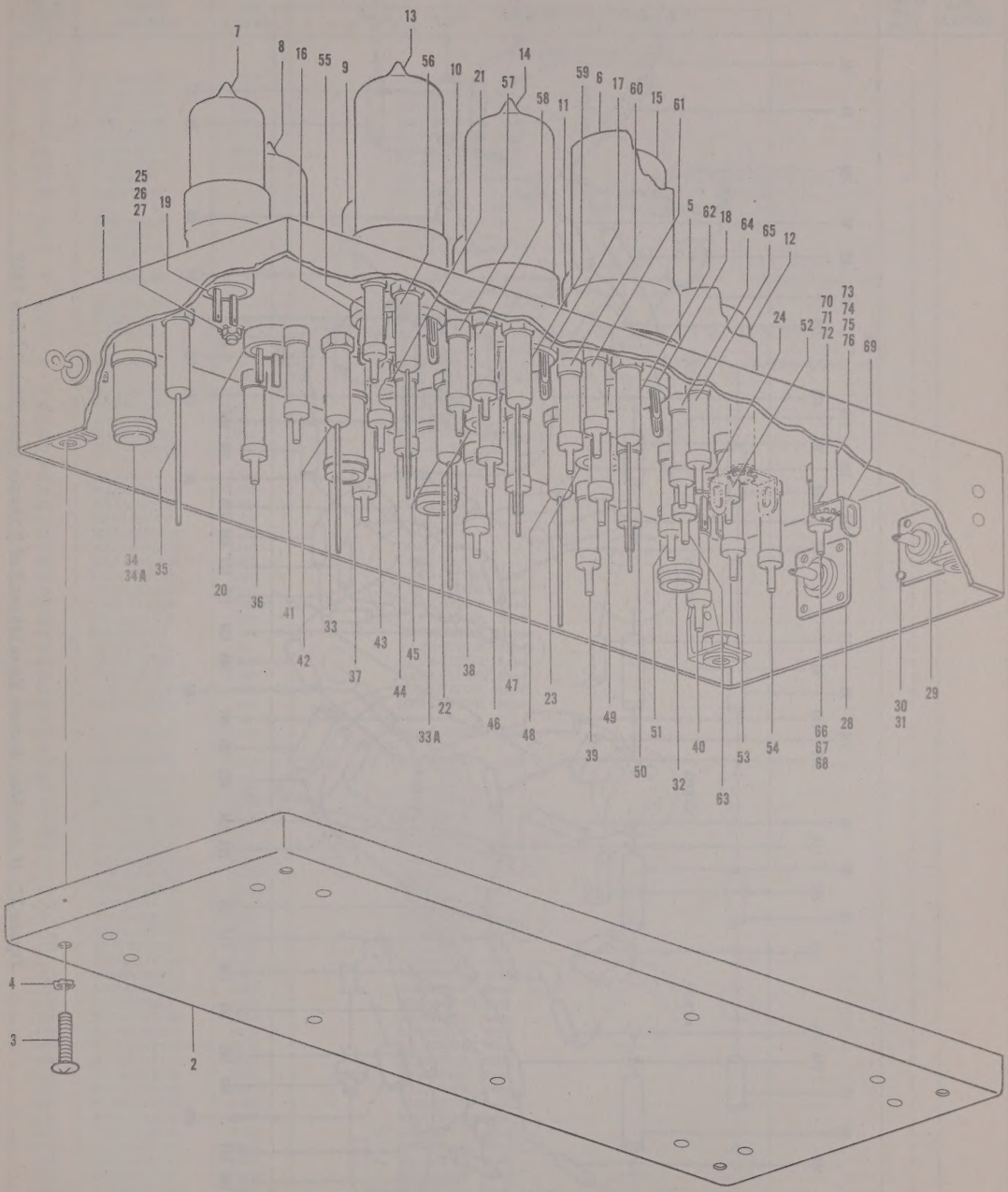

Figure 37. IF Amplifier, Bottom-Front View (Sheet 1 of 2 sheets, Index Nos. 1 thru 76)

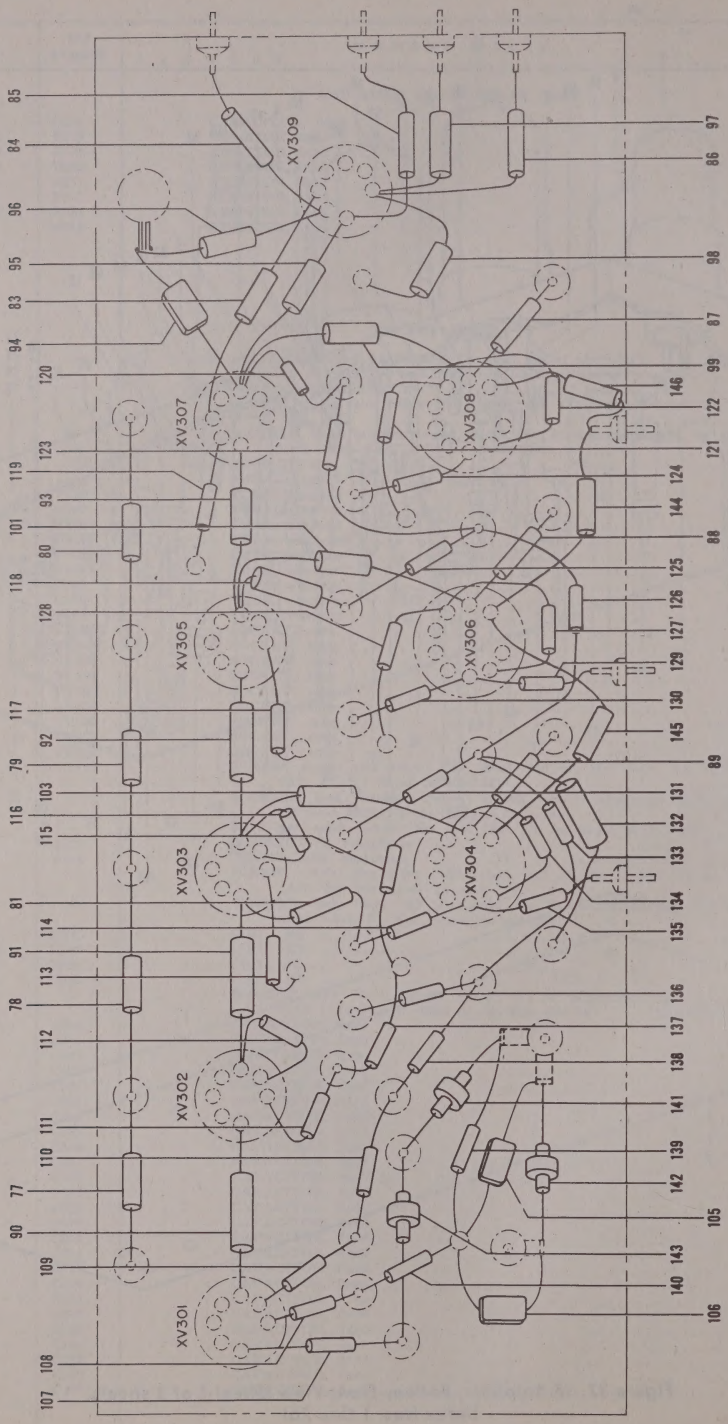

Figure 37. IF Amplifier, Bottom View (Sheet 2 of 2 sheets, Index Nos. 77 thru 146)

FIG. & INDEX NO.	PART NUMBER	REF SYMBOL	NOMENCLATURE 1 2 3 4 5 6 7	UNITS PER ASSY	APPLI-CATION
			IF AMPLIFIER (Cont)		
37-60	K7001403P1	C317	. . . . CAPACITOR, fixed	1	
-61	K7001403P1	C321	. . . . CAPACITOR, fixed	1	
-62	K7124442P2	C368	. . . . CAPACITOR, fixed	1	
-63	K7001403P1	C303	. . . . CAPACITOR, fixed	1	
-64	K7001403P1	C309	. . . . CAPACITOR, fixed	1	
-65	K7001403P1	C313	. . . . CAPACITOR, fixed	1	
-66	K7001403P3	C301	. . . . CAPACITOR, fixed	1	
-67	AN340-6	—	. . . . NUT, hex: steel, cad pl; No. 6-32 (Att. Pt. for items 35 thru 66)	32	
-68	AN936B6B	—	. . . . WASHER, lock: bronze, tinned; round, No. 6; shakeproof-type, tw ext teeth (Att. Pt. for items 35 thru 66)	32	
-69	K7878455P1	—	. . . . TERMINAL, lug	3	
-70	K7872445	—	. . . . WASHER, flat	2	
-71	AN515-6-4	—	. . . . SCREW, mach: slot drive; RH; steel, cad pl; No. 6-32; 1/4 in lg (Att. Pt. for items 69 and 70)	2	
-72	AN936B6B	—	. . . . WASHER, lock: bronze, tinned; round, No. 6; shakeproof-type, tw ext teeth (Att. Pt. for items 69 and 70)	3	
-73	M7462416P9	—	. . . . INSULATOR, standoff	2	
-74	K7872445	—	. . . . WASHER, flat	2	
-75	AN515-6-4	—	. . . . SCREW, mach: slot drive; RH; steel, cad pl; No. 6-32; 1/4 in lg (Att. Pt. for items 73 and 74)	2	
-76	AN936B6B	—	. . . . WASHER, lock: bronze, tinned; round, No. 6; shakeproof-type, tw ext teeth (Att. Pt. for items 73 and 74)	2	
-77	M7475057P1	L316	. . . . REACTOR	1	
-78	M7475057P1	L315	. . . . REACTOR	1	
-79	M7475057P1	L314	. . . . REACTOR	1	
-80	M7475057P1	L313	. . . . REACTOR	1	
-81	ML7481012G3	L302	. . . . COIL, RF	1	
✦ -83	M7475057P1	L312	. . . . REACTOR	1	
-84	ML7481012G6	L309	. . . . COIL, RF	1	
-85	ML7481012G6	L310	. . . . COIL, RF	1	
-86	ML7481012G4	L311	. . . . COIL, RF	1	
-87	ML7481012G4	L307	. . . . COIL, RF	1	
-88	ML7481012G4	L305	. . . . COIL, RF	1	
-89	ML7481012G4	L303	. . . . COIL, RF	1	
-90	CC26UK101J	C305	. . . . CAPACITOR, fixed	1	
-91	CC26UK101J	C312	. . . . CAPACITOR, fixed	1	
-92	CC26UK101J	C318	. . . . CAPACITOR, fixed	1	
-93	CC21UJ510J	C325	. . . . CAPACITOR, fixed	1	
-94	CM20D221J	C337	. . . . CAPACITOR, fixed	1	
-95	CC21UJ510J	C333	. . . . CAPACITOR, fixed	1	
-96	CC21UJ510J	C338	. . . . CAPACITOR, fixed	1	
-97	CC21UJ510J	C340	. . . . CAPACITOR, fixed	1	
-98	CC21UJ100D	C339	. . . . CAPACITOR, fixed	1	
-99	CC21UJ510J	C334	. . . . CAPACITOR, fixed	1	
✦ -101	CC21UJ510J	C326	. . . . CAPACITOR, fixed	1	
✦ -103	CC21UK510J	C319	. . . . CAPACITOR, fixed	1	
✦ -105	CM20D331J	C307	. . . . CAPACITOR, fixed	1	
-106	CM20D331J	C308	. . . . CAPACITOR, fixed	1	
-107	P7770419P131	R301	. . . . RESISTOR, fixed	1	
-108	P7770419P131	R302	. . . . RESISTOR, fixed	1	
-109	P7770419P167	R304	. . . . RESISTOR, fixed	1	
-110	P7770419P143	R305	. . . . RESISTOR, fixed	1	
-111	P7770419P135	R310	. . . . RESISTOR, fixed	1	
-112	P7770419P167	R308	. . . . RESISTOR, fixed	1	
-113	P7770419P147	R317	. . . . RESISTOR, fixed	1	
-114	P7770419P147	R318	. . . . RESISTOR, fixed	1	
-115	P7770419P195	R320	. . . . RESISTOR, fixed	1	
-116	RC30BF332J	R316	. . . . RESISTOR, fixed	1	
-117	P7770419P147	R324	. . . . RESISTOR, fixed	1	
-118	RC30BF332J	R323	. . . . RESISTOR, fixed	1	
-119	P7770419P147	R331	. . . . RESISTOR, fixed	1	
-120	RC20BF332J	R330	. . . . RESISTOR, fixed	1	
-121	P7770419P195	R334	. . . . RESISTOR, fixed	1	
-122	P7770419P219	R333	. . . . RESISTOR, fixed	1	
-123	P7770419P139	R329	. . . . RESISTOR, fixed	1	
-124	P7770419P147	R332	. . . . RESISTOR, fixed	1	
-125	P7770419P139	R322	. . . . RESISTOR, fixed	1	
-126	P7770419P139	R314	. . . . RESISTOR, fixed	1	
-127	P7770419P219	R326	. . . . RESISTOR, fixed	1	
-128	P7770419P195	R327	. . . . RESISTOR, fixed	1	
-129	P7770419P135	R328	. . . . RESISTOR, fixed	1	
-130	P7770419P147	R325	. . . . RESISTOR, fixed	1	
-131	P7770419P143	R315	. . . . RESISTOR, fixed	1	
-132	RC30BF101J	R313	. . . . RESISTOR, fixed	1	
-133	P7770419P139	R312	. . . . RESISTOR, fixed	1	
-134	P7770419P219	R319	. . . . RESISTOR, fixed	1	
-135	P7770419P139	R321	. . . . RESISTOR, fixed	1	
-136	P7770419P143	R309	. . . . RESISTOR, fixed	1	
-137	P7770419P139	R311	. . . . RESISTOR, fixed	1	
-138	P7770419P139	R306	. . . . RESISTOR, fixed	1	
-139	P7770419P171	R307	. . . . RESISTOR, fixed	1	
-140	P7770419P139	R303	. . . . RESISTOR, fixed	1	

FIG. & INDEX NO.	PART NUMBER	REF SYMBOL	1 2 3 4 5 6 7 NOMENCLATURE	UNITS PER ASSY	APPLI-CATION
			IF AMPLIFIER (Cont)		
37–141	ML7128210G1	Z302	. . . . FILTER, low pass	1	
–142	ML7128210G1	Z303	. . . . FILTER, low pass	1	
–143	ML7128210G1	Z301	. . . . FILTER, low pass	1	
–144	M7475057P1	L317	. . . . REACTOR	1	
–145	M7475057P1	L318	. . . . REACTOR	1	
–146	M7475057P1	L319	. . . . REACTOR	1	

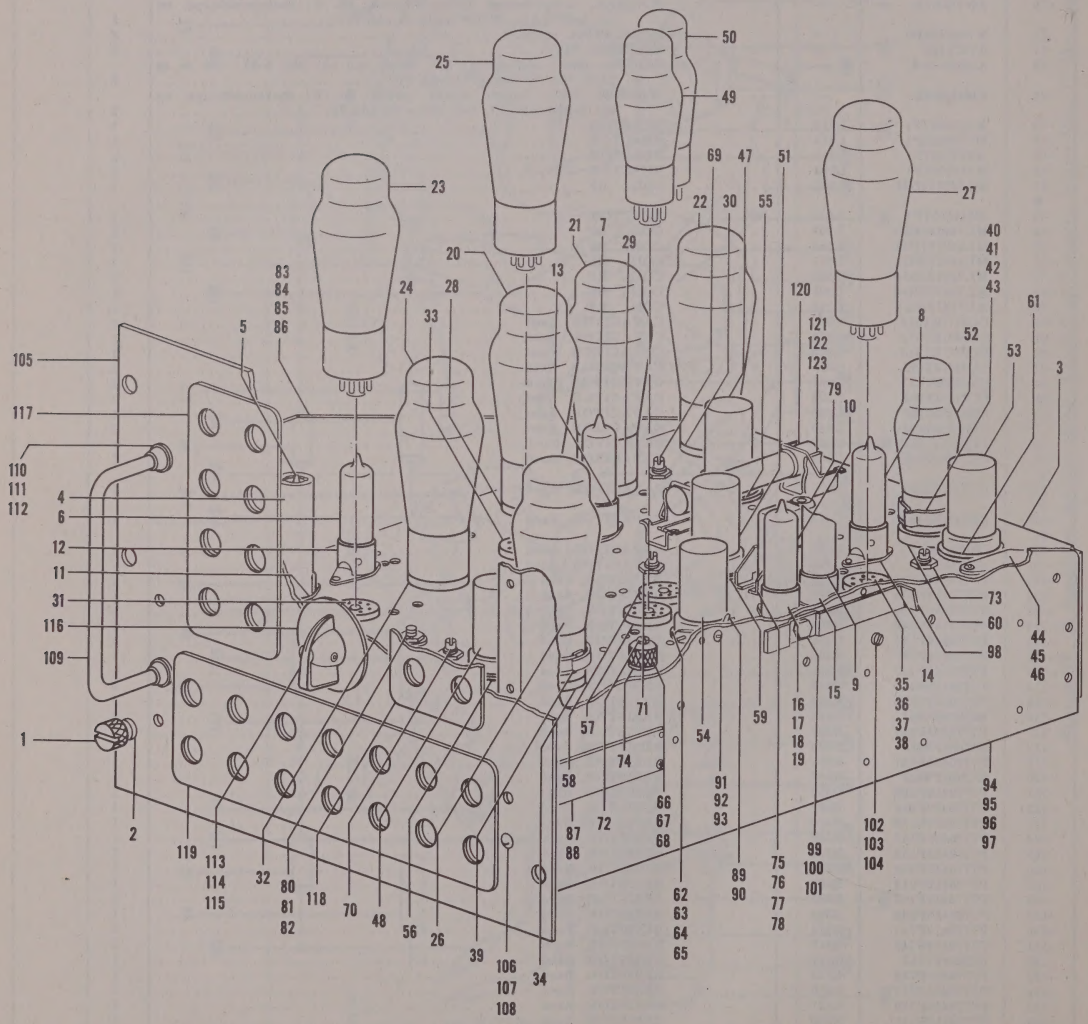

Figure 38. Voltage Regulator CN–103/CPS–6B, Front View (Sheet 1 of 3 sheets, Index Nos. 1 thru 123)

FIG. & INDEX NO.	PART NUMBER	REF SYMBOL	NOMENCLATURE 1 2 3 4 5 6 7	UNITS PER ASSY	APPLI-CATION
			VOLTAGE REGULATOR CN–103/CPS–6B		
38–	ML7353055G1	—	. VOLTAGE REGULATOR CN–103/CPS–6B (See Figures 2–16, 3–16, 4–18, 5 and 6 for next higher assembly)	Ref	
–1	K7126123P1	—	. . SCREW, captive	6	
–2	K7128235P2	—	. . BUSHING	6	
–3	T7665255P1	—	. . CHASSIS	1	
–4	8698	—	. . SHIELD, tube (Cinch)	6	
–5	OB2	V3212	. . TUBE, electron	1	
–6	OB2	V3211	. . TUBE, electron	1	
–7	OA2	V3205	. . TUBE, electron	1	
–8	OA2	V3214	. . TUBE, electron	1	
–9	OB2	V3219	. . TUBE, electron	1	
–10	OB2	V3220	. . TUBE, electron	1	
–11	S010M	XV3212	. . SOCKET, tube	1	
–12	S010M	XV3211	. . SOCKET, tube	1	
–13	S010M	XV3205	. . SOCKET, tube	1	
–14	S010M	XV3214	. . SOCKET, tube	1	
–15	S010M	XV3219	. . SOCKET, tube	1	
–16	S010M	XV3220	. . SOCKET, tube	1	
–17	AN515–4–5	—	. . SCREW, mach: slot drive; RH; steel, cad pl; No. 4–40; 5/16 in lg (Att. Pt. for items 11 thru 16)	12	
–18	AN936B4B	—	. . WASHER, lock: bronze, tinned; round, No. 4; shakeproof-type, tw ext teeth (Att. Pt. for items 11 thru 16)	12	
–19	AN340–4	—	. . NUT, hex: steel, cad pl; No. 4–40 (Att. Pt. for items 11 thru 16)	12	
–20	6AS7G	V3203	. . TUBE, electron	1	
–21	6AS7G	V3202	. . TUBE, electron	1	
–22	6AS7G	V3201	. . TUBE, electron	1	
–23	6AS7G	V3210	. . TUBE, electron	1	
–24	6AS7G	V3207	. . TUBE, electron	1	
–25	6AS7G	V3206	. . TUBE, electron	1	
–26	6AS7G	V3222	. . TUBE, electron	1	
–27	6AS7G	V3217	. . TUBE, electron	1	
–28	TSB8T101	XV3203	. . SOCKET, tube	1	
–29	TSB8T101	XV3202	. . SOCKET, tube	1	
–30	TSB8T101	XV3201	. . SOCKET, tube	1	
–31	TSB8T101	XV3210	. . SOCKET, tube	1	
–32	TSB8T101	XV3207	. . SOCKET, tube	1	
–33	TSB8T101	XV3206	. . SOCKET, tube	1	
–34	TSB8T101	XV3222	. . SOCKET, tube	1	
–35	TSB8T101	XV3217	. . SOCKET, tube	1	
–36	AN515–6–5	—	. . SCREW, mach: slot drive; RH; steel, cad pl; No. 6–32; 5/16 in lg (Att. Pt. for items 28 thru 35)	16	
–37	AN936B6B	—	. . WASHER, lock: bronze, tinned; round, No. 6; shakeproof-type, tw ext teeth (Att. Pt. for items 28 thru 35)	16	
–38	AN340–6	—	. . NUT, hex: steel, cad pl; No. 6–32 (Att. Pt. for items 28 thru 35)	16	
–39	926C	—	. . CLAMP (Birtcher)	8	
–40	926A	—	. . CLAMP (Birtcher)	3	
–41	AN520–10–5	—	. . SCREW, mach: slot drive; RH; steel, cad pl; No. 10–32; 5/16 in lg (Att. Pt. for items 39 and 40)	11	
–42	AN936B10B	—	. . WASHER, lock: bronze, tinned; round, No. 10; shakeproof-type, tw ext teeth (Att. Pt. for items 39 and 40)	11	
–43	AN345–10	—	. . NUT, hex: steel, cad pl; No. 10–32 (Att. Pt. for items 39 and 40)	11	
–44	K7005062P1	—	. . PLATE, cover	1	
–45	AN515–8–6	—	. . SCREW, mach: slot drive; RH; steel, cad pl; No. 8–32; 3/8 in lg (Att. Pt.)	1	
–46	AN936B8B	—	. . WASHER, lock: bronze, tinned; round, No. 8; shakeproof-type, tw ext teeth (Att. Pt.)	1	
–47	6SH7	V3204	. . TUBE, electron	1	
–48	6SH7	V3216	. . TUBE, electron	1	
–49	0A3/VR75	V3215	. . TUBE, electron	1	
–50	0A3/VR75	V3209	. . TUBE, electron	1	
–51	6SH7	V3208	. . TUBE, electron	1	
–52	0D3/VR150	V3213	. . TUBE, electron	1	
–53	6SH7	V3218	. . TUBE, electron	1	
–54	6SH7	V3221	. . TUBE, electron	1	
–55	TSB8T101	XX3204	. . SOCKET, tube	1	
–56	TSB8T101	XV3216	. . SOCKET, tube	1	
–57	TSB8T101	XV3215	. . SOCKET, tube	1	
–58	TSB8T101	XV3209	. . SOCKET, tube	1	
–59	TSB8T101	XV3208	. . SOCKET, tube	1	
–60	TSB8T101	XV3213	. . SOCKET, tube	1	
–61	TSB8T101	XV3218	. . SOCKET, tube	1	
–62	TSB8T101	XV3221	. . SOCKET, tube	1	
–63	AN515–6–5	—	. . SCREW, mach: slot drive; RH; steel, cad pl; No. 6–32; 5/16 in lg (Att. Pt. for items 55 thru 62)	16	
–64	AN936B6B	—	. . WASHER, lock: bronze, tinned; round, No. 6; shakeproof-type, tw ext teeth (Att. Pt. for items 55 thru 62)	16	
–65	AN340–6	—	. . NUT, hex: steel, cad pl; No. 6–32 (Att. Pt. for items 55 thru 62)	16	
–66	M7481469P1	—	. . NUT, lock	5	
–67	10061	—	. . COLLET (Millen)	5	
–68	AN936A616B	—	. . WASHER, lock: bronze, tinned; round, 3/8 in; shakeproof-type, tw int teeth (Att. Pt.)	5	
–69	P7768146P4	R3214	. . RESISTOR, variable	1	
–70	P7768146P4	R3274	. . RESISTOR, variable	1	
–71	P7768146P4	R3232	. . RESISTOR, variable	1	
–72	P7768146P4	R3263	. . RESISTOR, variable	1	
–73	P7768146P4	R3252	. . RESISTOR, variable	1	

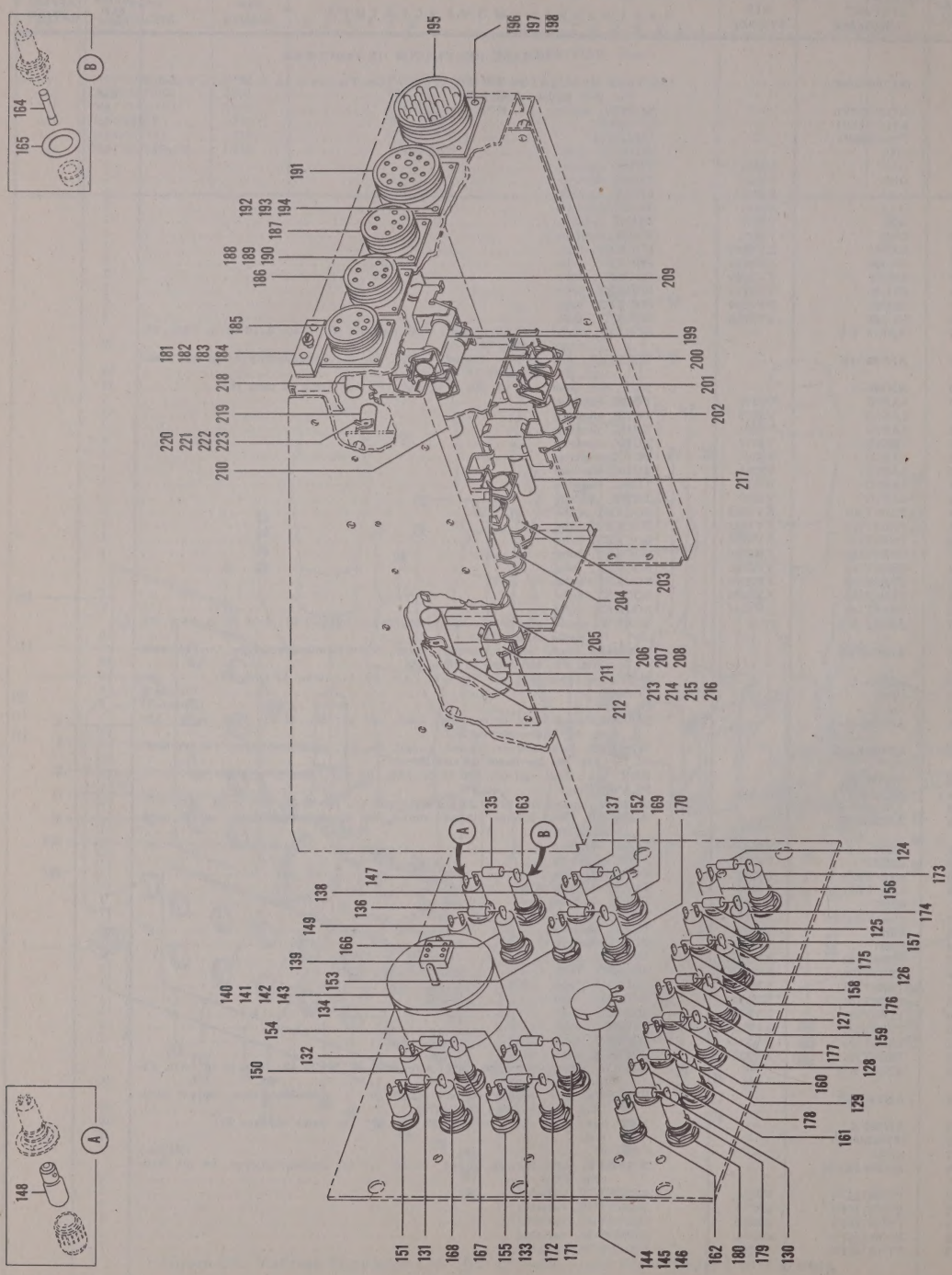

Figure 38. Voltage Regulator CN–103/CPS–6B, Bottom-Rear View (Sheet 2 of 3 sheets, Index Nos. 124 thru 223)

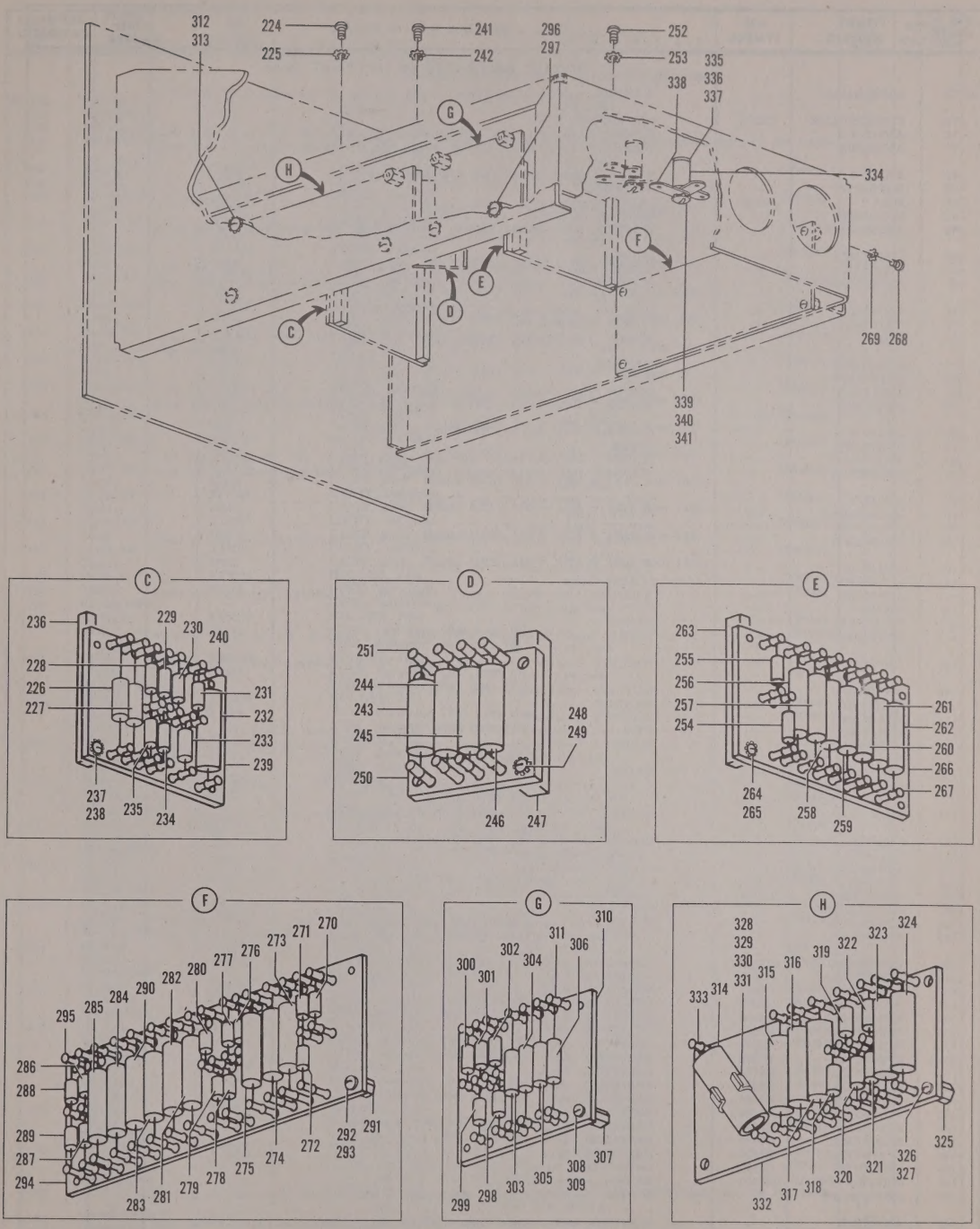

Figure 38. Voltage Regulator CN–103/CPS–6B, Bottom-Rear View (Sheet 3 of 3 sheets, Index Nos. 224 thru 341)

FIG. & INDEX NO.	PART NUMBER	REF SYMBOL	NOMENCLATURE 1 2 3 4 5 6 7	UNITS PER ASSY	APPLI-CATION
			VOLTAGE REGULATOR CN–103/CPS–6B (Cont)		
38–74	AN936A616B	—	WASHER, lock: bronze, tinned; round, 3/8 in; shakeproof-type, tw int teeth (Att. Pt.)	5	
–75	CP65B1FF254K	C3211	CAPACITOR, fixed	1	
–76	AN515–6–5	—	SCREW, mach: slot drive; RH; steel, cad pl; No. 6–32; 5/16 in lg (Att. Pt.)	2	
–77	AN936B6B	—	WASHER, lock: bronze, tinned; round, No. 6; shakeproof-type, tw ext teeth (Att. Pt.)	2	
–78	AN340–6	—	NUT, hex: steel, cad pl; No. 6–32 (Att. Pt.)	2	
–79	M2R53P12	—	GROMMET	1	
–80	SC1A	J3205	JACK, telephone (Mallory)	1	
–81	K7870535P1	—	NUT, hex (Att. Pt.)	1	
–82	AN936A616B	—	WASHER, lock: bronze, tinned; round, 3/8 in; shakeproof-type, tw int teeth (Att. Pt.)	1	
–83	T7664879P1	—	GUSSET	1	
–84	AN520–10–7	—	SCREW, mach: slot drive; RH; steel, cad pl; No. 10–32; 7/16 in lg (Att. Pt.)	7	
–85	AN936B10B	—	WASHER, lock: bronze, tinned; round, No. 10; shakeproof-type, tw ext teeth (Att. Pt.)	7	
–86	AN345–10	—	NUT, hex: steel, cad pl; No. 10–32 (Att. Pt.)	7	
–87	NP137555B	—	PLATE, identification	1	
–88	Coml	—	SCREW, self-tapping: Phillips drive; RH; SS; No. 4–40; 3/16 in lg (Att. Pt.) (Shakeproof)	4	
–89	K7876451P1	—	WRENCH	1	
–90	K7126174P1	—	CLIP	1	
–91	AN515–4–5	—	SCREW, mach: slot drive; RH; steel, cad pl; No. 4–40; 5/16 in lg (Att. Pt.)	2	
–92	AN936B4B	—	WASHER, lock: bronze, tinned; round, No. 4; shakeproof-type, tw ext teeth (Att. Pt.)	2	
–93	AN345–4	—	NUT, hex: steel, cad pl; No. 4–40 (Att. Pt.)	2	
–94	P7664879P2	—	GUSSET	1	
–95	AN520–10–7	—	SCREW, mach: slot drive; RH; steel, cad pl; No. 10–32; 7/16 in lg (Att. Pt.)	7	
–96	AN936B10B	—	WASHER, lock: bronze, tinned; round, No. 10; shakeproof-type, tw ext teeth (Att. Pt.)	7	
–97	AN345–10	—	NUT, hex: steel, cad pl; No. 10–32 (Att. Pt.)	7	
–98	ML7005399G1	—	PLATE, catch	1	
–99	K7003070P1	—	SCREW, mach (Att. Pt.)	1	
–100	AN936B10B	—	WASHER, lock: bronze, tinned; round, No. 10; shakeproof-type, tw ext teeth (Att. Pt.)	1	
–101	AN345–10	—	NUT, hex: steel, cad pl; No. 10–32 (Att. Pt.)	1	
–102	K7003069P1	—	SCREW, mach	2	
–103	AN936B6B	—	WASHER, lock: bronze, tinned; round, No. 6; shakeproof-type, tw ext teeth	2	
–104	AN340–6	—	NUT, hex: steel, cad pl; No. 6–32	2	
–105	P7771875P1	—	PANEL	1	
–106	AN520B10–7	—	SCREW, mach: slot drive; RH; brass, black oxidized; No. 10–32; 7/16 in lg (Att. Pt.)	12	
–107	AN936B10B	—	WASHER, lock: bronze, tinned; round, No. 10; shakeproof-type, tw ext teeth (Att. Pt.)	12	
–108	AN345–10	—	NUT, hex: steel, cad pl; No. 10–32 (Att. Pt.)	12	
–109	K7002870P1	—	HANDLE	2	
–110	K7002869P1	—	WASHER, extruded	4	
–111	AN345–10	—	NUT, hex: steel, cad pl; No. 10–32 (Att. Pt. for items 109 and 110)	4	
–112	AN936B10B	—	WASHER, lock: bronze, tinned; round, No. 10; shakeproof-type, tw ext teeth (Att. Pt. for items 109 and 110)	4	
–113	K7876700P1	—	KNOB	1	
–114	Coml	—	SCREW, set: Bristo six-spline drive; headless; steel, cad pl; No. 8–32; 1/4 in lg; cup point (Att. Pt.) (Bristolco)	1	
–115	Coml	—	SCREW, set: Bristo six-spline drive; headless; steel, cad pl; No. 8–32; 1/8 in lg; cup point (Att. Pt.) (Bristolco)	1	
–116	NP136062	—	PLATE, identification	1	
–117	NP136064	—	PLATE, identification	1	
–118	NP136065	—	PLATE, identification	1	
–119	NP136070	—	PLATE, identification	1	
–120	RW14F632	R3244	RESISTOR, fixed	1	
–121	ML7770257G2	—	CLIP SET	1	
–122	AN520–10–8	—	SCREW, mach: slot drive; RH; steel, cad pl; No. 10–32; 1/2 in lg (Att. Pt.)	2	
–123	AN936B10B	—	WASHER, lock: bronze, tinned; round, No. 10; shakeproof-type, tw ext teeth (Att. Pt.)	2	
–124	RC20BF154J	R3276	RESISTOR, fixed	1	
–125	RC20BF105J	R3277	RESISTOR, fixed	1	
–126	RC20BF684J	R3278	RESISTOR, fixed	1	
–127	RC20BF334J	R3279	RESISTOR, fixed	1	
–128	RC20BF104J	R3280	RESISTOR, fixed	1	
–129	RC20BF224J	R3281	RESISTOR, fixed	1	
–130	RC20BF684J	R3282	RESISTOR, fixed	1	
–131	RC20BF154J	R3283	RESISTOR, fixed	1	
–132	RC20BF224J	R3284	RESISTOR, fixed	1	
–133	RC20BF684J	R3285	RESISTOR, fixed	1	
–134	RC20BF224J	R3286	RESISTOR, fixed	1	
–135	RC20BF154J	R3287	RESISTOR, fixed	1	
–136	RC20BF224J	R3288	RESISTOR, fixed	1	
–137	RC20BF684J	R3289	RESISTOR, fixed	1	
–138	RC20BF224J	R3290	RESISTOR, fixed	1	
–139	CM35D472J	C3203	CAPACITOR, fixed	1	
–140	MR36W500DCVV	M3201	METER, multimeter	1	
–141	AN515B6–5	—	SCREW, mach: slot drive; RH; brass, black oxidized; No. 6–32; 5/16 in lg (Att. Pt.)	3	
–142	AN936B6B	—	WASHER, lock: bronze, tinned; round, No. 6; shakeproof-type, tw ext teeth (Att. Pt.)	3	

FIG. & INDEX NO.	PART NUMBER	REF SYMBOL	NOMENCLATURE 1 2 3 4 5 6 7	UNITS PER ASSY	APPLI-CATION
			VOLTAGE REGULATOR CN–103/CPS–6B (Cont)		
38–143	AN340–6	—	. . NUT, hex: steel, cad pl; No. 6–32 (Att. Pt.)	3	
–144	P7770998P8	S3201	. . SWITCH, rotary	1	
–145	K7870535P1	—	. . NUT, hex (Att. Pt.)	1	
–146	AN936A616B	—	. . WASHER, lock: bronze, tinned; round, 3/8 in; shakeproof-type, tw int teeth (Att. Pt.)	1	
–147	53410–995	XI3212	. . LIGHT, indicator (Dialco)	1	
–148	Coml	I3212	. . LAMP, glow: Mazda NE51, 110 v, 1/25 w	1	
–149	53410–995	XI3213	. . LIGHT, indicator (Dialco)	1	
	Coml	I3213	. . LAMP, glow: Mazda NE51, 110 v, 1/25 w (Ref item 148)	1	
–150	53410–995	XI3208	. . LIGHT, indicator (Dialco)	1	
	Coml	I3208	. . LAMP, glow: Mazda NE51, 110 v, 1/25 w (Ref item 148)	1	
–151	53410–995	XI3209	. . LIGHT, indicator (Dialco)	1	
	Coml	I3209	. . LAMP, glow: Mazda NE51, 110 v, 1/25 w (Ref item 148)	1	
–152	53410–995	XI3214	. . LIGHT, indicator (Dialco)	1	
	Coml	I3214	. . LAMP, glow: Mazda NE51, 110 v, 1/25 w (Ref item 148)	1	
–153	53410–995	XI3215	. . LIGHT, indicator (Dialco)	1	
	Coml	I3215	. . LAMP, glow: Mazda NE51, 110 v, 1/25 w (Ref item 148)	1	
–154	53410–995	XI3210	. . LIGHT, indicator (Dialco)	1	
	Coml	I3210	. . LAMP, glow: Mazda NE51, 110 v, 1/25 w (Ref item 148)	1	
–155	53410–995	XI3211	. . LIGHT, indicator (Dialco)	1	
	Coml	I3211	. . LAMP, glow: Mazda NE51, 110 v, 1/25 w (Ref item 148)	1	
–156	53410–995	XI3201	. . LIGHT, indicator (Dialco)	1	
	Coml	I3201	. . LAMP, glow: Mazda NE51, 110 v, 1/25 w (Ref item 148)	1	
–157	53410–995	XI3202	. . LIGHT, indicator (Dialco)	1	
	Coml	I3202	. . LAMP, glow: Mazda NE51, 110 v, 1/25 w (Ref item 148)	1	
–158	53410–995	XI3203	. . LIGHT, indicator (Dialco)	1	
	Coml	I3203	. . LAMP, glow: Mazda NE51, 110 v, 1/25 w (Ref item 148)	1	
–159	53410–995	XI3204	. . LIGHT, indicator (Dialco)	1	
	Coml	I3204	. . LAMP, glow: Mazda NE51, 110 v, 1/25 w (Ref item 148)	1	
–160	53410–995	XI3205	. . LIGHT, indicator (Dialco)	1	
	Coml	I3205	. . LAMP, glow: Mazda NE51, 110 v, 1/25 w (Ref item 148)	1	
–161	53410–995	XI3206	. . LIGHT, indicator (Dialco)	1	
	Coml	I3206	. . LAMP, glow: Mazda NE51, 110 v, 1/25 w (Ref item 148)	1	
–162	53410–995	XI3207	. . LIGHT, indicator (Dialco)	1	
	Coml	I3207	. . LAMP, glow: Mazda NE51, 110 v, 1/25 w (Ref item 148)	1	
–163	HCM–R	XF3212	. . HOLDER, fuse (Buss)	1	
–164	ABS1	F3212	. . FUSE, cartridge (Buss)	1	
–165	K7126649P5	—	. . DISK, indicator	1	
–166	HCM–R	XF3213	. . HOLDER, fuse (Buss)	1	
	MCB–1/16	F3213	. . FUSE, cartridge (Ref item 164) (Buss)	1	
	K7126649P1	—	. . DISK, indicator (Ref item 165)	1	
–167	HCM–R	XF3208	. . HOLDER, fuse (Buss)	1	
	ABS2	F3208	. . FUSE, cartridge (Ref item 164) (Buss)	1	
	K7126649P6	—	. . DISK, indicator (Ref item 165)	1	
–168	HCM–R	XF3209	. . HOLDER, fuse (Buss)	1	
	MCB–1/16	F3209	. . FUSE, cartridge (Ref item 164) (Buss)	1	
	K7126649P1	—	. . DISK, indicator (Ref item 165)	1	
–169	HCM–R	XF3214	. . HOLDER, fuse (Buss)	1	
	AGS–1/4	F3214	. . FUSE, cartridge (Ref item 164) (Buss)	1	
	K7126649P2	—	. . DISK, indicator (Ref item 165)	1	
–170	HCM–R	XF3215	. . HOLDER, fuse (Buss)	1	
	AGS–1/4	F3215	. . FUSE, cartridge (Ref item 164) (Buss)	1	
	K7126649P2	—	. . DISK, indicator (Ref item 165)	1	
–171	HCM–R	XF3210	. . HOLDER, fuse (Buss)	1	
	AGS–1/4	F3210	. . FUSE, cartridge (Ref item 164) (Buss)	1	
	K7126649P2	—	. . DISK, indicator (Ref item 165)	1	
–172	HCM–R	XF3211	. . HOLDER, fuse (Buss)	1	
	AGS–1/4	F3211	. . FUSE, cartridge (Ref item 164) (Buss)	1	
	K7126649P2	—	. . DISK, indicator (Ref item 165)	1	
–173	HCM–R	XF3201	. . HOLDER, fuse (Buss)	1	
	ABS10	F3201	. . FUSE, cartridge (Ref item 164) (Buss)	1	
	K7126649P8	—	. . DISK, indicator (Ref item 165)	1	
–174	HCM–R	XF3202	. . HOLDER, fuse (Buss)	1	
	AGS–1/4	F3202	. . FUSE, cartridge (Ref item 164) (Buss)	1	
	K7126649P2	—	. . DISK, indicator (Ref item 165)	1	
–175	HCM–R	XF3203	. . HOLDER, fuse (Buss)	1	
	AGS–1/4	F3203	. . FUSE, cartridge (Ref item 164) (Buss)	1	
	K7126649P2	—	. . DISK, indicator (Ref item 165)	1	
–176	HCM–R	XF3204	. . HOLDER, fuse (Buss)	1	
	MCB–1/16	F3204	. . FUSE, cartridge (Ref item 164) (Buss)	1	
	K7126649P1	—	. . DISK, indicator (Ref item 165)	1	
–177	HCM–R	XF3205	. . HOLDER, fuse (Buss)	1	
	AGS–1/2	F3205	. . FUSE, cartridge (Ref item 164) (Buss)	1	
	K7126649P3	—	. . DISK, indicator (Ref item 165)	1	
–178	HCM–R	XF3206	. . HOLDER, fuse (Buss)	1	
	AGS5	F3206	. . FUSE, cartridge (Ref item 164) (Buss)	1	
	K7126649P1	—	. . DISK, indicator (Ref item 165)	1	
–179	HCM–R	XF3207	. . HOLDER, fuse (Buss)	1	
	MCB–1/16	F3207	. . FUSE, cartridge (Ref item 164) (Buss)	1	
	K7126649P3	—	. . DISK, indicator (Ref item 165)	1	
–180	AN936A1016	—	. . WASHER, lock: steel, cad pl; round, 5/8 in; shakeproof-type, tw int teeth (Att. Pt. for items 163 thru 179)	15	
–181	ML7460330G5	S3202	. . SWITCH, interlock	1	
–182	AN515–6–10	—	. . SCREW, mach: slot drive; RH; steel, cad pl; No. 6–32; 5/8 in lg (Att. Pt.)	2	
–183	AN936B6B	—	. . WASHER, lock: bronze, tinned; round, No. 6; shakeproof-type, tw ext teeth (Att. Pt.)	2	

FIG. & INDEX NO.	PART NUMBER	REF SYMBOL	NOMENCLATURE 1 2 3 4 5 6 7	UNITS PER ASSY	APPLI-CATION
			VOLTAGE REGULATOR CN-103/CPS-6B (Cont)		
38-184	AN340-6	—	. . NUT, hex: steel, cad pl; No. 6-32 (Att. Pt.)	2	
-185	AN3102-22-33S	J3206	. . CONNECTOR, receptacle	1	
-186	AN3102-22-33S	J3204	. . CONNECTOR, receptacle	1	
-187	AN3102-22-33S	J3203	. . CONNECTOR, receptacle	1	
-188	AN515-4-6	—	. . SCREW, mach: slot drive; RH; steel, cad pl; No. 4-40; 3/8 in lg (Att. Pt. for items 185, 186 and 187)	12	
-189	AN936B4B	—	. . WASHER, lock: bronze, tinned; round, No. 4; shakeproof-type, tw ext teeth (Att. Pt. for items 185, 186 and 187)	12	
-190	AN340-4	—	. . NUT, hex: steel, cad pl; No. 4-40 (Att. Pt. for items 185, 186 and 187)	12	
-191	AN3102-32-12S	J3202	. . CONNECTOR, receptacle	1	
-192	AN515-6-7	—	. . SCREW, mach: slot drive; RH; steel, cad pl; No. 6-32; 7/16 in lg (Att. Pt.)	4	
-193	AN936B6B	—	. . WASHER, lock: bronze, tinned; round, No. 6; shakeproof-type, tw ext teeth (Att. Pt.)	4	
-194	AN340-6	—	. . NUT, hex: steel, cad pl; No. 6-32 (Att. Pt.)	4	
-195	AN3102-32-12P	J3201	. . CONNECTOR, receptacle	1	
-196	AN515-8-7	—	. . SCREW, mach: slot drive; RH; steel, cad pl; No. 8-32; 7/16 in lg (Att. Pt.)	4	
-197	AN936B8B	—	. . WASHER, lock: bronze, tinned; round, No. 8; shakeproof-type, tw ext teeth (Att. Pt.)	4	
-198	AN340-8	—	. . NUT, hex: steel, cad pl; No. 8-32 (Att. Pt.)	4	
-199	RW16F202	R3242	. . RESISTOR, fixed	1	
-200	RW16F202	R3243	. . RESISTOR, fixed	1	
-201	RW16F202	R3240	. . RESISTOR, fixed	1	
-202	RW16F252	R3241	. . RESISTOR, fixed	1	
-203	RW16F312	R3245	. . RESISTOR, fixed	1	
-204	RW16F312	R3246	. . RESISTOR, fixed	1	
-205	RW16F312	R3247	. . RESISTOR, fixed	1	
-206	ML7770257G3	—	. . CLIP SET	7	
-207	AN520-10-7	—	. . SCREW, mach: slot drive; RH; steel, cad pl; No. 10-32; 7/16 in lg (Att. Pt.)	14	
-208	AN936B10B	—	. . WASHER, lock: bronze, tinned; round, No. 10; shakeproof-type, tw ext teeth (Att. Pt.)	14	
-209	CP26A1EF104K	C3201	. . CAPACITOR, fixed	1	
-210	CP26A1EF104K	C3204	. . CAPACITOR, fixed	1	
-211	CP26A1EF104K	C3209	. . CAPACITOR, fixed	1	
-212	CP26A1EF104K	C3213	. . CAPACITOR, fixed	1	
-213	TH17	—	. . CLIP (Mallory)	4	
-214	AN515-4-5	—	. . SCREW, mach: slot drive; RH; steel, cad pl; No. 4-40; 5/16 in lg (Att. Pt.)	4	
-215	AN936B4B	—	. . WASHER, lock: bronze, tinned; round, No. 4; shakeproof-type, tw ext teeth (Att. Pt.)	4	
-216	AN340-4	—	. . NUT, hex: steel, cad pl; No. 4-40 (Att. Pt.)	4	
-217	CP26A1EF103V	C3205	. . CAPACITOR, fixed	1	
-218	CP26A1EF103V	C3207	. . CAPACITOR, fixed	1	
-219	CP26A1EF103V	C3208	. . CAPACITOR, fixed	1	
-220	TH15	—	. . CLIP (Mallory)	3	
-221	AN515-4-5	—	. . SCREW, mach: slot drive; RH; steel, cad pl; No. 4-40; 5/16 in lg (Att. Pt.)	3	
-222	AN936B4B	—	. . WASHER, lock: bronze, tinned; round, No. 4; shakeproof-type, tw ext teeth (Att. Pt.)	3	
-223	AN340-4	—	. . NUT, hex: steel, cad pl; No. 4-40 (Att. Pt.)	3	
	ML7000567G1	—	. . CAPACITOR-RESISTOR SUBASSEMBLY	1	
-224	AN515-8-5	—	. . SCREW, mach: slot drive; RH; steel, cad pl; No. 8-32; 5/16 in lg (Att. Pt.)	2	
-225	AN936B8B	—	. . WASHER, lock: bronze, tinned; round, No. 8; shakeproof-type, tw ext teeth (Att. Pt.)	2	
-226	RC30BF100J	R3292	. . . RESISTOR, fixed	1	
-227	RC30BF100J	R3291	. . . RESISTOR, fixed	1	
-228	RC20BF331J	R3222	. . . RESISTOR, fixed	1	
-229	RC20BF473M	R3237	. . . RESISTOR, fixed	1	
-230	RC20BF331J	R3239	. . . RESISTOR, fixed	1	
-231	RC20BF154J	R3275	. . . RESISTOR, fixed	1	
-232	CP26A1EF103V	C3210	. . . CAPACITOR, fixed	1	
-233	RC20BF224J	R3273	. . . RESISTOR, fixed	1	
-234	RC20BF331J	R3238	. . . RESISTOR, fixed	1	
-235	RC20BF331J	R3223	. . . RESISTOR, fixed	1	
	ML7000568G1	—	. . . BOARD, terminal	1	
-236	K7126106P1	—	. . . . POST, supporting	2	
-237	AN515-8-6	—	. . . . SCREW, mach: slot drive; RH; steel, cad pl; No. 8-32; 3/8 in lg (Att. Pt.)	4	
-238	AN936B8B	—	. . . . WASHER, lock: bronze, tinned; round, No. 8; shakeproof-type, tw ext teeth (Att. Pt.)	4	
-239	K7000568P2	—	. . . . PANEL	1	
-240	T100-3	—	. . . . TERMINAL, stud (Bead Chain)	18	
	ML7126676G1	—	. . CAPACITOR-RESISTOR SUBASSEMBLY	1	
-241	AN515-8-5	—	. . SCREW, mach: slot drive; RH; steel, cad pl; No. 8-32; 5/16 in lg (Att. Pt.)	2	
-242	AN936B8B	—	. . WASHER, lock: bronze, tinned; round, No. 8; shakeproof-type, tw ext teeth (Att. Pt.)	2	
-243	CP26A1EF103V	C3206	. . . CAPACITOR, fixed	1	
-244	RC40BF222J	R3234	. . . RESISTOR, fixed	1	
-245	RC40BF152J	R3235	. . . RESISTOR, fixed	1	
-246	RC40BF152J	R3236	. . . RESISTOR, fixed	1	
	ML7126677G1	—	. . . BOARD, terminal	1	
-247	K7126106P1	—	. . . . POST, supporting	2	
-248	AN515-8-6	—	. . . . SCREW, mach: slot drive; RH; steel, cad pl; No. 8-32; 3/8 in lg (Att. Pt.)	4	
-249	AN936B8B	—	. . . . WASHER, lock: bronze, tinned; round, No. 8; shakeproof-type, tw ext teeth (Att. Pt.)	4	
-250	K7126677P2	—	. . . . PANEL	1	
-251	T100-3	—	. . . . TERMINAL, stud (Bead Chain)	8	
	ML7000557G1	—	. . RESISTOR ASSEMBLY, fixed	1	

FIG. & INDEX NO.	PART NUMBER	REF SYMBOL	NOMENCLATURE 1 2 3 4 5 6 7	UNITS PER ASSY	APPLI-CATION
			VOLTAGE REGULATOR CN–103/CPS–6B (Cont)		
38–252	AN515–8–5	—	. . SCREW, mach: slot drive; RH; steel, cad pl; No. 8–32; 5/16 in lg (Att. Pt.)	2	
–253	AN936B8B	—	. . WASHER, lock: bronze, tinned; round, No. 8; shakeproof-type, tw ext teeth (Att. Pt.)	2	
–254	RC20BF104J	R3231	. . . RESISTOR, fixed	1	
–255	RC20BF154J	R3233	. . . RESISTOR, fixed	1	
–256	RC40BF102J	R3224	. . . RESISTOR, fixed	1	
–257	RC40BF102J	R3225	. . . RESISTOR, fixed	1	
–258	RC40BF332J	R3226	. . . RESISTOR, fixed	1	
–259	RC40BF332J	R3227	. . . RESISTOR, fixed	1	
–260	RC40BF682J	R3228	. . . RESISTOR, fixed	1	
–261	RC40BF682J	R3229	. . . RESISTOR, fixed	1	
–262	RC40BF332J	R3230	. . . RESISTOR, fixed	1	
	ML7000558G1	—	. . . BOARD, terminal	1	
–263	K7126106P1	—	. . . . POST, supporting	2	
–264	AN515–8–6	—	. . . . SCREW, mach: slot drive; RH; steel, cad pl; No. 8–32; 3/8 in lg (Att. Pt.)	4	
–265	AN936B8B	—	. . . . WASHER, lock: bronze, tinned; round, No. 8; shakeproof-type, tw ext teeth (Att. Pt.)	4	
–266	K7000558P2	—	. . . . PANEL	1	
–267	T100–3	—	. . . . TERMINAL, stud (Bead Chain)	8	
	ML7483021G1	—	. . CAPACITOR-RESISTOR SUBASSEMBLY	1	
–268	AN515–8–4	—	. . SCREW, mach: slot drive; RH; steel, cad pl; No. 8–32; 1/4 in lg (Att. Pt.)	4	
–269	AN936B8B	—	. . WASHER, lock: bronze, tinned; round, No. 8; shakeproof-type, tw ext teeth (Att. Pt.)	4	
–270	RC20BF331J	R3221	. . . RESISTOR, fixed	1	
–271	RC20BF684J	R3201	. . . RESISTOR, fixed	1	
–272	RC20BF331J	R3202	. . . RESISTOR, fixed	1	
–273	RC40BF472J	R3218	. . . RESISTOR, fixed	1	
–274	RC40BF682J	R3217	. . . RESISTOR, fixed	1	
–275	RC40BF682J	R3216	. . . RESISTOR, fixed	1	
–276	RC20BF331J	R3207	. . . RESISTOR, fixed	1	
–277	RC20BF331J	R3205	. . . RESISTOR, fixed	1	
–278	RC20BF331J	R3206	. . . RESISTOR, fixed	1	
–279	RC20BF334J	R3215	. . . RESISTOR, fixed	1	
–280	RC20BF334J	R3213	. . . RESISTOR, fixed	1	
–281	RC40BF222J	R3212	. . . RESISTOR, fixed	1	
–282	RC40BF103J	R3211	. . . RESISTOR, fixed	1	
–283	RC40BF103J	R3210	. . . RESISTOR, fixed	1	
–284	RC40BF332J	R3209	. . . RESISTOR, fixed	1	
–285	RC40BF332J	R3208	. . . RESISTOR, fixed	1	
–286	RC20BF331J	R3203	. . . RESISTOR, fixed	1	
–287	RC20BF331J	R3204	. . . RESISTOR, fixed	1	
–288	RC20BF104J	R3219	. . . RESISTOR, fixed	1	
–289	RC20BF331J	R3220	. . . RESISTOR, fixed	1	
–290	CP26A1EF103V	C3202	. . . CAPACITOR, fixed	1	
	ML7488022G1	—	. . . BOARD, terminal	1	
–291	M7480544P11D	—	. . . . POST, spacing	4	
–292	AN515–8–4	—	. . . . SCREW, mach: slot drive; RH; steel, cad pl; No. 8–32; 1/4 in lg (Att. Pt.)	4	
–293	AN936A8B	—	. . . . WASHER, lock: bronze, tinned; round, No. 8; shakeproof-type, tw int teeth (Att. Pt.)	4	
–294	M7483022P2	—	. . . . PANEL	1	
–295	T100–3	—	. . . . TERMINAL, stud (Bead Chain)	38	
	ML7000565G1	—	. . RESISTOR ASSEMBLY, fixed	1	
–296	AN515–8–4	—	. . SCREW, mach: slot drive; RH; steel, cad pl; No. 8–32; 1/4 in lg (Att. Pt.)	4	
–297	AN936B8B	—	. . WASHER, lock: bronze, tinned; round, No. 8; shakeproof-type, tw ext teeth (Att. Pt.)	4	
–298	RC20BF331J	R3250	. . . RESISTOR, fixed	1	
–299	RC20BF225J	R3248	. . . RESISTOR, fixed	1	
–300	RC20BF683J	R3251	. . . RESISTOR, fixed	1	
–301	RC20BF331J	R3249	. . . RESISTOR, fixed	1	
–302	RC20BF154J	R3253	. . . RESISTOR, fixed	1	
–303	RC30BF102J	R3257	. . . RESISTOR, fixed	1	
–304	RC30BF102J	R3256	. . . RESISTOR, fixed	1	
–305	RC30BF102J	R3255	. . . RESISTOR, fixed	1	
–306	RC30BF102J	R3254	. . . RESISTOR, fixed	1	
	ML7000566G1	—	. . . BOARD, terminal	1	
–307	M7480544P11D	—	. . . . POST, spacing	4	
–308	AN515–8–4	—	. . . . SCREW, mach: slot drive; RH; steel, cad pl; No. 8–32; 1/4 in lg (Att. Pt.)	4	
–309	AN936A8B	—	. . . . WASHER, lock: bronze, tinned; round, No. 8; shakeproof-type, tw int teeth (Att. Pt.)	4	
–310	K7000566P2	—	. . . . PANEL	1	
–311	T100–3	—	. . . . TERMINAL, stud (Bead Chain)	17	
	ML7129278G1	—	. . CAPACITOR-RESISTOR SUBASSEMBLY	1	
–312	AN515–8–4	—	. . SCREW, mach: slot drive; RH; steel, cad pl; No. 8–32; 1/4 in lg (Att. Pt.)	4	
–313	AN936B8B	—	. . WASHER, lock: bronze, tinned; round, No. 8; shakeproof-type, tw ext teeth (Att. Pt.)	4	
–314	CP26A1EF104K	C3212	. . . CAPACITOR, fixed	1	
–315	RC40BF332J	R3266	. . . RESISTOR, fixed	1	
–316	RC40BF332J	R3268	. . . RESISTOR, fixed	1	
–317	RC40BF332J	R3267	. . . RESISTOR, fixed	1	
–318	RC20BF154J	R3262	. . . RESISTOR, fixed	1	
–319	RC20BF224J	R3264	. . . RESISTOR, fixed	1	
–320	RC20BF331J	R3272	. . . RESISTOR, fixed	1	
–321	RC20BF474J	R3270	. . . RESISTOR, fixed	1	

FIG. & INDEX NO.	PART NUMBER	REF SYMBOL	NOMENCLATURE 1 2 3 4 5 6 7	UNITS PER ASSY	APPLI-CATION
			VOLTAGE REGULATOR CN–103/CPS–6B (Cont)		
38–322	RC20BF331J	R3271	. . . RESISTOR, fixed	1	
–323	RC40BF332J	R3265	. . . RESISTOR, fixed	1	
–324	RC40BF222J	R3269	. . . RESISTOR, fixed	1	
	ML7126675G1	—	. . . BOARD, terminal	1	
–325	M7480544P11D	—	. . . . POST, spacing	4	
–326	AN515–8–4	—	. . . . SCREW, mach: slot drive; RH; steel, cad pl; No. 8–32; 1/4 in lg (Att. Pt.)	4	
–327	AN936A8B	—	. . . . WASHER, lock: bronze, tinned; round, No. 8; shakeproof-type, tw int teeth (Att. Pt.)	4	
–328	TH17	—	. . . . CLIP (Mallory)	1	
–329	AN515–4–4	—	. . . . SCREW, mach: slot drive; RH; steel, cad pl; No. 4–40; 1/4 in lg (Att. Pt.)	2	
–330	AN936B4B	—	. . . . WASHER, lock; bronze, tinned; round, No. 4; shakeproof-type, tw ext teeth (Att. Pt.)	2	
–331	AN340–4	—	. . . . NUT, hex: steel, cad pl; No. 4–40 (Att. Pt.)	2	
–332	K7126675P2	—	. . . . PANEL	1	
–333	T100–3	—	. . . . TERMINAL, stud (Bead Chain)	28	
–334	K7106954P2	—	. . POST, spacing	2	
–335	K7874555P20	—	. . WASHER, flat	1	
–336	AN515–8–6	—	. . SCREW, mach: slot drive; RH; steel, cad pl; No. 8–32; 3/8 in lg (Att. Pt. for items 334 and 335)	1	
–337	AN936B8B	—	. . WASHER, lock: bronze, tinned; round, No. 8; shakeproof-type, tw ext teeth (Att. Pt.)	1	
–338	K7861852P2	—	. . TERMINAL, lug	7	
–339	K7874555P20	—	. . WASHER, flat	1	
–340	AN515–8–6	—	. . SCREW, mach: slot drive; RH; steel, cad pl; No. 8–32; 3/8 in lg (Att. Pt. for items 338 and 339)	1	
–341	AN936B8B	—	. . WASHER, lock: bronze, tinned; round, No. 8; shakeproof-type, tw ext teeth (Att. Pt. for items 338 and 339)	1	
			POWER SUPPLY PP–459/CPS–6B		
39–	ML7353057G1	—	. POWER SUPPLY PP–459/CPS–6B (See Figures 2–17, 3–17, 4–19, 5 and 6 for next higher assembly)	Ref	
–1	K7126123P1	—	. . SCREW, captive	6	
–2	K7128235P2	—	. . BUSHING	6	
–3	P7771880P1	—	. . PANEL	1	
–4	AN520B10–7	—	. . SCREW, mach: slot drive; RH; brass, black oxidized; No. 10–32; 7/16 in lg (Att. Pt.)	9	
–5	AN936B10	—	. . WASHER, lock: steel, cad pl; round, No. 10; shakeproof-type, tw ext teeth (Att. Pt.)	9	
–6	AN345–10	—	. . NUT, hex: steel, cad pl; No. 10–32 (Att. Pt.)	9	
–7	K7002870P1	—	. . HANDLE	2	
–8	K7002869P1	—	. . WASHER, extruded	4	
–9	AN345–10	—	. . NUT, hex: steel, cad pl; No. 10–32 (Att. Pt. for items 7 and 8)	4	
–10	AN936B10	—	. . WASHER, lock: steel, cad pl; round, No. 10; shakeproof-type, tw ext teeth (Att. Pt. for items 7 and 8)	4	
–11	RC30BF102J	R3001	. . RESISTOR, fixed	1	
–12	M7481469P1	—	. . NUT, lock	1	
–13	10061	—	. . COLLET (Millen)	1	
–14	RP151SD3ROKK	R3002	. . RESISTOR, variable	1	
–15	AN936B616	—	. . WASHER, lock: steel, cad pl; round, 3/8 in; shakeproof-type, tw ext teeth (Att. Pt.)	1	
–16	NP125970A	—	. . PLATE, identification	1	
–17	K7886574P2	—	. . KNOB	1	
–18	Coml	—	. . SCREW, set: Bristo six-spline drive; headless; steel, cad pl; No. 8–32; 1/4 in lg; cup point (Att. Pt.) (Bristolco)	1	
–19	212A3	S3001	. . SWITCH, rotary (Ohmite)	1	
–20	K7893938P1	—	. . NUT, hex (Att. Pt.)	1	
–21	AN936A616B	—	. . WASHER, lock: bronze, tinned; round, 3/8 in; shakeproof-type, tw int teeth (Att. Pt.)	2	
–22	NP125971	—	. . PLATE, identification	1	
–23	801002–512	XI3001	. . LIGHT, indicator (Dialco)	1	
–24	Coml	I3001	. . LAMP, incandescent: Mazda 6S6, 115 v, 6 w	1	
–25	HCM–R	XF3001	. . HOLDER, fuse (Buss)	1	
–26	MDM	F3001	. . FUSE, cartridge (Buss)	1	
–27	K7126649P7	—	. . DISK, indicator	1	
–28	HCM–R	—	. . HOLDER, fuse (Buss)	1	
	MDM	—	. . FUSE, cartridge (Ref item 26) (Buss)	1	
–29	K7126649P7	—	. . DISK, indicator	1	
–30	NP125969	—	. . PLATE, identification	1	
–31	K7004333	—	. . BLOCK	1	
–32	AN505–4–7	—	. . SCREW, mach: slot drive; FH; steel, cad pl; No. 4–40; 7/16 in lg (Att. Pt.)	4	
–33	AN340–4	—	. . NUT, hex: steel, cad pl; No. 4–40 (Att. Pt.)	4	
–34	K7109613P3	J3003	. . CONNECTOR, receptacle	1	
–35	K7003701P1	—	. . NUT, hex (Att. Pt.)	1	
–36	K7003702P1	—	. . WASHER, flat (Att. Pt.)	1	
–37	NP137555A	—	. . PLATE, identification	1	
–38	AN504C4R4	—	. . SCREW, self-tapping: Phillips drive; RH; SS; No. 4–40; 1/4 in lg (Att. Pt.)	4	
–39	K7876451P1	—	. . WRENCH	1	

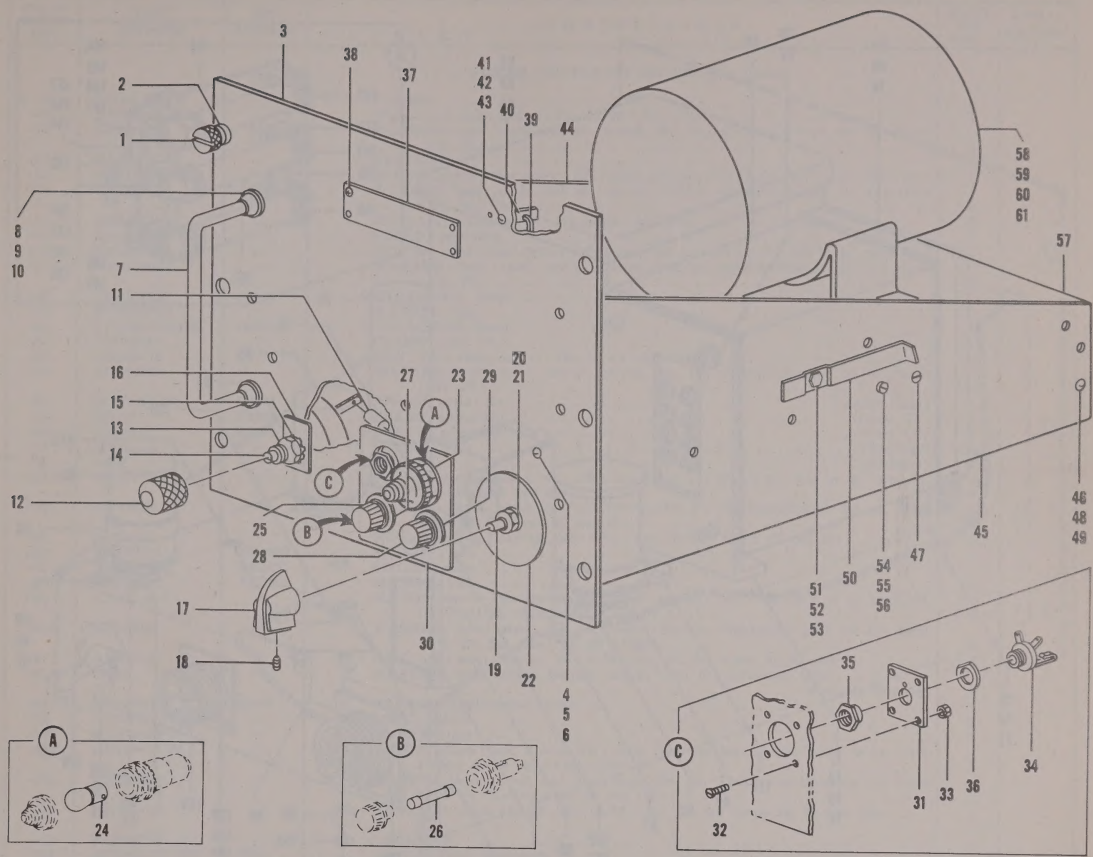

Figure 39. Power Supply PP–459/CPS–6B, Front View (Sheet 1 of 2 sheets, Index Nos. 1 thru 61)

FIG. & INDEX NO.	PART NUMBER	REF SYMBOL	1 2 3 4 5 6 7 NOMENCLATURE	UNITS PER ASSY	APPLI-CATION
			POWER SUPPLY PP–459/CPS–6B (Cont)		
39–40	K7126174P1	—	. . HOLDER, wrench	1	
–41	AN515B4–5	—	. . SCREW, mach: slot drive; RH; brass, black oxidized; No. 4–40; 5/16 in lg (Att. Pt.)	2	
–42	AN936B4B	—	. . WASHER, lock: bronze, tinned; round, No. 4; shakeproof-type, tw ext teeth (Att. Pt.)	2	
–43	AN340–4	—	. . NUT, hex: steel, cad pl; No. 4–40 (Att. Pt.)	2	
–44	T7665259P2	—	. . GUSSET	1	
–45	T7665259P1	—	. . GUSSET	1	
–46	AN520–10–7	—	. . SCREW, mach: slot drive; RH; steel, cad pl; No. 10–32; 7/16 in lg (Att. Pt. for items 44 and 45)	13	
–47	AN510–10–7	—	. . SCREW, mach: slot drive; FH; steel, cad pl; No. 10–32; 7/16 in lg (Att. Pt. for item 45)	1	
–48	AN936B10	—	. . WASHER, lock: steel, cad pl; round, No. 10; shakeproof-type, tw ext teeth (Att. Pt. for items 44 and 45)	14	
–49	AN345–10	—	. . NUT, hex: steel, cad pl; No. 10–32 (Att. Pt. for items 44 and 45)	14	
–50	ML7005399G2	—	. . PLATE, catch	1	
–51	K7003070P1	—	. . SCREW, mach (Att. Pt.)	1	
–52	AN936B10	—	. . WASHER, lock: steel, cad pl; round, No. 10; shakeproof-type, tw ext teeth (Att. Pt.)	1	
–53	AN345–10	—	. . NUT, hex: steel, cad pl; No. 10–32 (Att. Pt.)	1	
–54	K7003069P1	—	. . SCREW, mach	2	

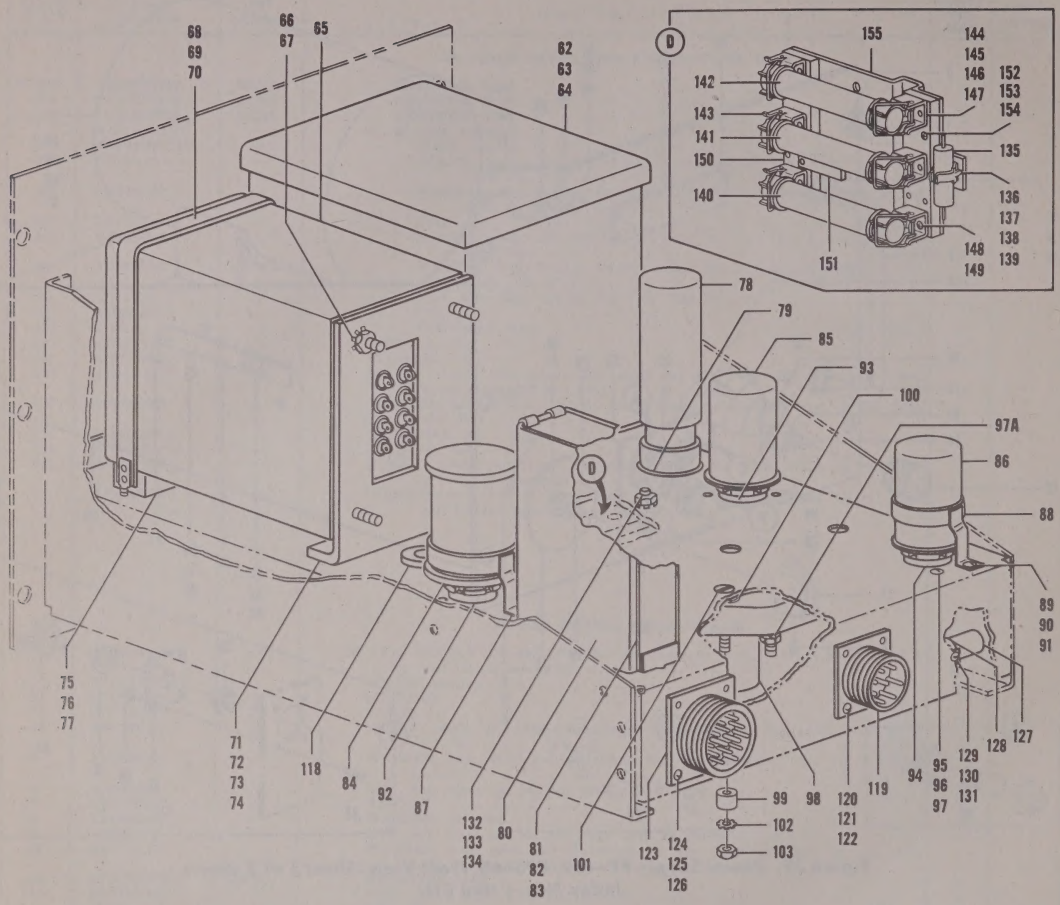

Figure 39. Power Supply PP–459/CPS–6B, Rear View (Sheet 2 of 2 sheets, Index Nos. 62 thru 155)

FIG. & INDEX NO.	PART NUMBER	REF SYMBOL	1 2 3 4 5 6 7 NOMENCLATURE	UNITS PER ASSY	APPLI-CATION
			POWER SUPPLY PP–459/CPS–6B (Cont)		
39–55	AN936B6	—	. . WASHER, lock: steel, cad pl; round, No. 6; shakeproof-type, tw ext teeth	2	
–56	AN340–6	—	. . NUT, hex: steel, cad pl; No. 6–32	2	
–57	T7665260P1	—	. . CHASSIS	1	
–58	6RS5HB57	CR3001	. . RECTIFIER, metallic (GE)	1	
–59	AN515–616–12	—	. . SCREW, mach: slot drive; RH; steel, cad pl; 3/8 in–16; 3/4 in lg (Att. Pt.)	2	
–60	AN936B616	—	. . WASHER, lock: steel, cad pl; round, 3/8 in; shakeproof-type, tw ext teeth (Att. Pt.)	2	
–61	AN340–616	—	. . NUT, hex: steel, cad pl; 3/8 in–16 (Att. Pt.)	2	
–62	7480437	L3001	. . REACTOR (GE)	1	
–63	AN340–416	—	. . NUT, hex: steel, cad pl; 1/4 in–20 (Att. Pt.)	4	
–64	AN936B416	—	. . WASHER, lock: steel, cad pl; round, 1/4 in; shakeproof-type, tw ext teeth (Att. Pt.)	4	
–65	7481599	T3001	. . TRANSFORMER, power (GE)	1	
–66	AN340–416	—	. . NUT, hex: steel, cad pl; 1/4 in–20 (Att. Pt.)	4	
–67	AN936B416	—	. . WASHER, lock: steel, cad pl; round, 1/4 in; shakeproof-type, tw ext teeth (Att. Pt.)	4	

FIG. & INDEX NO.	PART NUMBER	REF SYMBOL	NOMENCLATURE 1 2 3 4 5 6 7	UNITS PER ASSY	APPLI-CATION
			POWER SUPPLY PP–459/CPS–6B (Cont)		
39–68	ML7001066G1	—	. . CLAMP	1	
–69	AN345–10	—	. . NUT, hex: steel, cad pl; No. 10–32 (Att. Pt.)	2	
–70	AN936B10	—	. . WASHER, lock: steel, cad pl; round, No. 10; shakeproof-type, tw ext teeth (Att. Pt.)	2	
–71	M7481990P1	—	. . BRACKET	1	
–72	AN515–416–10	—	. . SCREW, mach: slot drive; RH; steel, cad pl; 1/4 in–20; 5/8 in lg (Att. Pt.)	3	
–73	AN936B416	—	. . WASHER, lock: steel, cad pl; round, 1/4 in; shakeproof-type, tw ext teeth (Att. Pt.)	3	
–74	AN340–416	—	. . NUT, hex: steel, cad pl; 1/4 in–20 (Att. Pt.)	3	
–75	K7129260P1	—	. . STRAP, retaining	1	
–76	AN515–416–6	—	. . SCREW, mach: slot drive; RH; steel, cad pl; 1/4 in–20; 3/8 in lg (Att. Pt.)	2	
–77	AN936B416	—	. . WASHER, lock: steel, cad pl; round, 1/4 in; shakeproof-type, tw ext teeth (Att. Pt.)	2	
–78	CE41C122F	C3001	. . CAPACITOR, fixed	1	
–79	K7004667P1	—	. . WASHER, flat	1	
–80	CP70B1FG106K	C3002	. . CAPACITOR, fixed	1	
–81	CPO7SD5	—	. . CLAMP (Att. Pt.)	2	
–82	AN345–10	—	. . NUT, hex: steel, cad pl; No. 10–32 (Att. Pt.)	4	
–83	AN936B10	—	. . WASHER, lock: steel, cad pl; round, No. 10; shakeproof-type, tw ext teeth (Att. Pt.)	4	
–84	BOHO6A120	K3003	. . RELAY, armature (Allied Cont)	1	
–85	SK5001	K3001	. . RELAY, armature (Clare CP)	1	
–86	SK5127	K3002	. . RELAY, armature (Clare CP)	1	
–87	926P	—	. . CLAMP (Birtcher)	1	
–88	926D	—	. . CLAMP (Birtcher)	2	
–89	AN515–8–6	—	. . SCREW, mach: slot drive; RH; steel, cad pl; No. 8–32; 3/8 in lg (Att. Pt. for items 87 and 88)	3	
–90	AN936B8	—	. . WASHER, lock: steel, cad pl; round, No. 8; shakeproof-type, tw ext teeth (Att. Pt. for items 87 and 88)	3	
–91	AN340–8	—	. . NUT, hex: steel, cad pl; No. 8–32 (Att. Pt. for items 87 and 88)	3	
–92	TSB8T101	XK3003	. . SOCKET, tube	1	
–93	TSB8T101	XK3001	. . SOCKET, tube	1	
–94	TSB8T101	XK3002	. . SOCKET, tube	1	
–95	AN515–6–6	—	. . SCREW, mach: slot drive; RH; steel, cad pl; No. 6–32; 3/8 in lg (Att. Pt. for items 92, 93 and 94)	6	
–96	AN936B6	—	. . WASHER, lock: steel, cad pl; round, No. 6; shakeproof-type, tw ext teeth (Att. Pt. for items 92, 93 and 94)	6	
–97	AN340–6	—	. . NUT, hex: steel, cad pl; No. 6–32 (Att. Pt. for items 92, 93 and 94)	6	
–97A	Coml	—	. . WASHER, lock, silicon bronze, cad pl; No. 10; split-ring type (Wrought Washer)	3	
–98	M7467948P1	E3001	. . ARRESTOR, electrical surge	1	
–99	W7353057P59	—	. . POST, spacing	2	
–100	K7874555P17	—	. . WASHER, flat	2	
–101	AN510–10–20	—	. . SCREW, mach: slot drive; FH; steel, cad pl; No. 10–32; 1-1/4 in lg (Att. Pt. for items 98, 99 and 100)	2	
–102	AN936B10	—	. . WASHER, lock: steel, cad pl; round, No. 10; shakeproof-type, tw ext teeth (Att. Pt. for items 98, 99 and 100)	2	
–103	AN345–10	—	. . NUT, hex: steel, cad pl; No. 10–32 (Att. Pt. for items 98, 99 and 100)	2	
✦ –118	M2R53P14	—	. . GROMMET	1	
–119	AN3102–22–23P	J3001	. . CONNECTOR, receptacle	1	
–120	AN515–4–6	—	. . SCREW, mach: slot drive; RH; steel, cad pl; No. 4–40; 3/8 in lg (Att. Pt.)	4	
–121	AN936B4	—	. . WASHER, lock: steel, cad pl; round, No. 4; shakeproof-type, tw ext teeth (Att. Pt.)	4	
–122	AN340–4	—	. . NUT, hex: steel, cad pl; No. 4–40 (Att. Pt.)	4	
–123	AN3102–28–2P	J3002	. . CONNECTOR, receptacle	1	
–124	AN515–6–6	—	. . SCREW, mach: slot drive; RH; steel, cad pl; No. 6–32; 3/8 in lg (Att. Pt.)	4	
–125	AN936B6	—	. . WASHER, lock: steel, cad pl; round, No. 6; shakeproof-type, tw ext teeth (Att. Pt.)	4	
–126	AN340–6	—	. . NUT, hex: steel, cad pl; No. 6–32 (Att. Pt.)	4	
–127	CP26A1EF104K	C3003	. . CAPACITOR, fixed	1	
–128	K7004433P3	—	. . CLIP	1	
–129	AN515–4–4	—	. . SCREW, mach: slot drive; RH; steel, cad pl; No. 4–40; 1/4 in lg (Att. Pt.)	1	
–130	AN936B4	—	. . WASHER, lock: steel, cad pl; round, No. 4; shakeproof-type, tw ext teeth (Att. Pt.)	1	
–131	AN340–4	—	. . NUT, hex: steel, cad pl; No. 4–40 (Att. Pt.)	1	
	ML7408525G1	—	. . CAPACITOR-RESISTOR ASSEMBLY	1	
–132	AN515–416–6	—	. . SCREW, mach: slot drive; RH; steel, cad pl; 1/4 in–20; 3/8 in lg (Att. Pt.)	2	
–133	AN936B416B	—	. . WASHER, lock: bronze, tinned; round, 1/4 in; shakeproof-type, tw ext teeth (Att. Pt.)	2	
–134	AN340–416	—	. . NUT, hex: steel, cad pl; 1/4 in–20 (Att. Pt.)	2	
–135	CP26A1EF503K	C3004	. . . CAPACITOR, fixed	1	
–136	K7004433P3	—	. . . CLIP	1	
–137	AN515–4R4	—	. . . SCREW, mach: Phillips drive; RH; steel, cad pl; No. 4–40; 1/4 in lg (Att. Pt.)	1	
–138	AN936B4B	—	. . . WASHER, lock: bronze, tinned; round, No. 4; shakeproof-type, tw ext teeth (Att. Pt.)	1	
–139	AN340–4	—	. . . NUT, hex: steel, cad pl; No. 4–40 (Att. Pt.)	1	
–140	M7471802P15	R3003	. . . RESISTOR, fixed	1	
–141	M7471802P15	R3004	. . . RESISTOR, fixed	1	
–142	M7471802P15	R3005	. . . RESISTOR, fixed	1	
–143	K17–3A	—	. . . CLIP (Trumbull)	3	
–144	K17–4A	—	. . . CLIP (Trumbull)	3	
–145	AN510–10R10	—	. . . SCREW, mach: Phillips drive; FH; steel, cad pl; No. 10–32; 5/8 in lg (Att. Pt. for items 143 and 144)	6	

FIG. & INDEX NO.	PART NUMBER	REF SYMBOL	NOMENCLATURE 1 2 3 4 5 6 7	UNITS PER ASSY	APPLI-CATION
			POWER SUPPLY PP–459/CPS–6B (Cont)		
39–146	AN936B10B	—	. . . WASHER, lock: bronze, tinned; round, No. 10; shakeproof-type, tw ext teeth (Att. Pt. for items 143 and 144)	6	
–147	AN345–10	—	. . . NUT, hex: steel, cad pl; No. 10–32 (Att. Pt. for items 143 and 144)	6	
–148	AN515–6R4	—	. . . SCREW, mach: Phillips drive; RH; steel, cad pl; No. 6–32; 1/4 in lg (Att. Pt. for items 143 and 144)	6	
–149	AN936B6B	—	. . . WASHER, lock: bronze, tinned; round, No. 6; shakeproof-type, tw ext teeth (Att. Pt. for items 143 and 144)	6	
–150	B7408547P1	—	. . . PLATE, mounting	2	
–151	NP72549G	—	. . . PLATE, identification	3	
–152	AN515–6R10	—	. . . SCREW, mach: Phillips drive; RH; steel, cad pl; No. 6–32; 5/8 in lg (Att. Pt. for items 150 and 151)	8	
–153	AN936B6B	—	. . . WASHER, lock: bronze, tinned; round, No. 6; shakeproof-type, tw ext teeth (Att. Pt. for items 150 and 151)	8	
–154	AN340–6	—	. . . NUT, hex: steel, cad pl; No. 6–32 (Att. Pt. for items 150 and 151)	8	
–155	B7408526P1	—	. . . PLATE, mounting	1	
			RADAR RECEIVER R–307/CPS–6B		
40–	ML7354006G1	—	. RADAR RECEIVER R–307/CPS–6B (See Figures 3–18, 4–20 and 6 for next higher assembly)	Ref	
–1	K7126123P1	—	. . SCREW, captive	6	
–2	W7354025P1	—	. . CHASSIS	1	
–3	7403311	T603	. . TRANSFORMER, power (GE)	1	
–4	AN340–6	—	. . NUT, hex: steel, cad pl; No. 6–32 (Att. Pt.)	4	
–5	AN936B6B	—	. . WASHER, lock: bronze, tinned; round, No. 6; shakeproof-type, tw ext teeth (Att. Pt.)	4	
–6	CE41C122F	C644	. . CAPACITOR, fixed	1	
–7	7403301	L616	. . REACTOR (GE)	1	
–8	AN340–6	—	. . NUT, hex: steel, cad pl; No. 6–32 (Att. Pt.)	2	
–9	AN936B6B	—	. . WASHER, lock: bronze, tinned; round, No. 6; shakeproof-type, tw ext teeth (Att. Pt.)	2	
–10	SK5161	K602	. . RELAY, armature (Clare CP)	1	
–11	TSB8T101	XK602	. . SOCKET, tube	1	
–12	AN505–6R5	—	. . SCREW, mach: Phillips drive; FH; steel, cad pl; No. 6–32; 5/16 in lg (Att. Pt.)	2	
–13	AN936B6B	—	. . WASHER, lock: bronze, tinned; round, No. 6; shakeproof-type, tw ext teeth (Att. Pt.)	2	
–14	AN340–6	—	. . NUT, hex: steel, cad pl; No. 6–32 (Att. Pt.)	2	
–15	926D	—	. . CLAMP (Birtcher)	1	
–16	AN515–8R6	—	. . SCREW, mach: Phillips drive; RH; steel, cad pl; No. 8–32; 3/8 in lg (Att. Pt.)	1	
–17	AN936B8B	—	. . WASHER, lock: bronze, tinned; round, No. 8; shakeproof-type, tw ext teeth (Att. Pt.)	1	
–18	AN340–8	—	. . NUT, hex: steel, cad pl; No. 8–32 (Att. Pt.)	1	
–19	6RS5C37	CR601	. . RECTIFIER, metallic (GE)	1	
–20	CP07SA3	—	. . CLAMP (Att. Pt.)	2	
–21	AN345–10	—	. . NUT, hex: steel, cad pl; No. 10–32 (Att. Pt.)	2	
–22	AN936B10B	—	. . WASHER, lock: bronze, tinned; round, No. 10; shakeproof-type, tw ext teeth (Att. Pt.)	2	
–23	7482766	T602	. . TRANSFORMER, power (GE)	1	
–24	AN340–6	—	. . NUT, hex: steel, cad pl; No. 6–32 (Att. Pt.)	4	
–25	AN936B6B	—	. . WASHER, lock: bronze, tinned; round, No. 6; shakeproof-type, tw ext teeth (Att. Pt.)	4	
–26	CP53B1FF205K	C648	. . CAPACITOR, fixed	1	
–27	AN515–8R6	—	. . SCREW, mach: Phillips drive; RH; steel, cad pl; No. 8–32; 3/8 in lg (Att. Pt.)	2	
–28	AN936B8B	—	. . WASHER, lock: bronze, tinned; round, No. 8; shakeproof-type, tw ext teeth (Att. Pt.)	2	
–29	AN340–8	—	. . NUT, hex: steel, cad pl; No. 8–32 (Att. Pt.)	2	
–30	CP65B1FF105K	C641	. . CAPACITOR, fixed	1	
–31	AN515–6R5	—	. . SCREW, mach: Phillips drive; RH; steel, cad pl; No. 6–32; 5/16 in lg (Att. Pt.)	2	
–32	AN936B6B	—	. . WASHER, lock: bronze, tinned; round, No. 6; shakeproof-type, tw ext teeth (Att. Pt.)	2	
–33	AN340–6	—	. . NUT, hex: steel, cad pl; No. 6–32 (Att. Pt.)	2	
–34	275C	K601	. . RELAY, armature (WECo)	1	
–35	TSB8T101	XK601	. . SOCKET, tube	1	
–36	AN505–6R5	—	. . SCREW, mach: Phillips drive; FH; steel, cad pl; No. 6–32; 5/16 in lg (Att. Pt.)	2	
–37	AN936B6B	—	. . WASHER, lock: bronze, tinned; round, No. 6; shakeproof-type, tw ext teeth (Att. Pt.)	2	
–38	AN340–6	—	. . NUT, hex: steel, cad pl; No. 6–32 (Att. Pt.)	2	
–39	926B	—	. . CLAMP (Birtcher)	1	
–40	AN515–8R6	—	. . SCREW, mach: Phillips drive; RH; steel, cad pl; No. 8–32; 3/8 in lg (Att. Pt.)	1	
–41	AN936B8B	—	. . WASHER, lock: bronze, tinned; round, No. 8; shakeproof-type, tw ext teeth (Att. Pt.)	1	
–42	AN340–8	—	. . NUT, hex: steel, cad pl; No. 8–32 (Att. Pt.)	1	
–43	SOS3	—	. . SHIELD, tube	1	
–44	6AK5	V610	. . TUBE, electron	1	

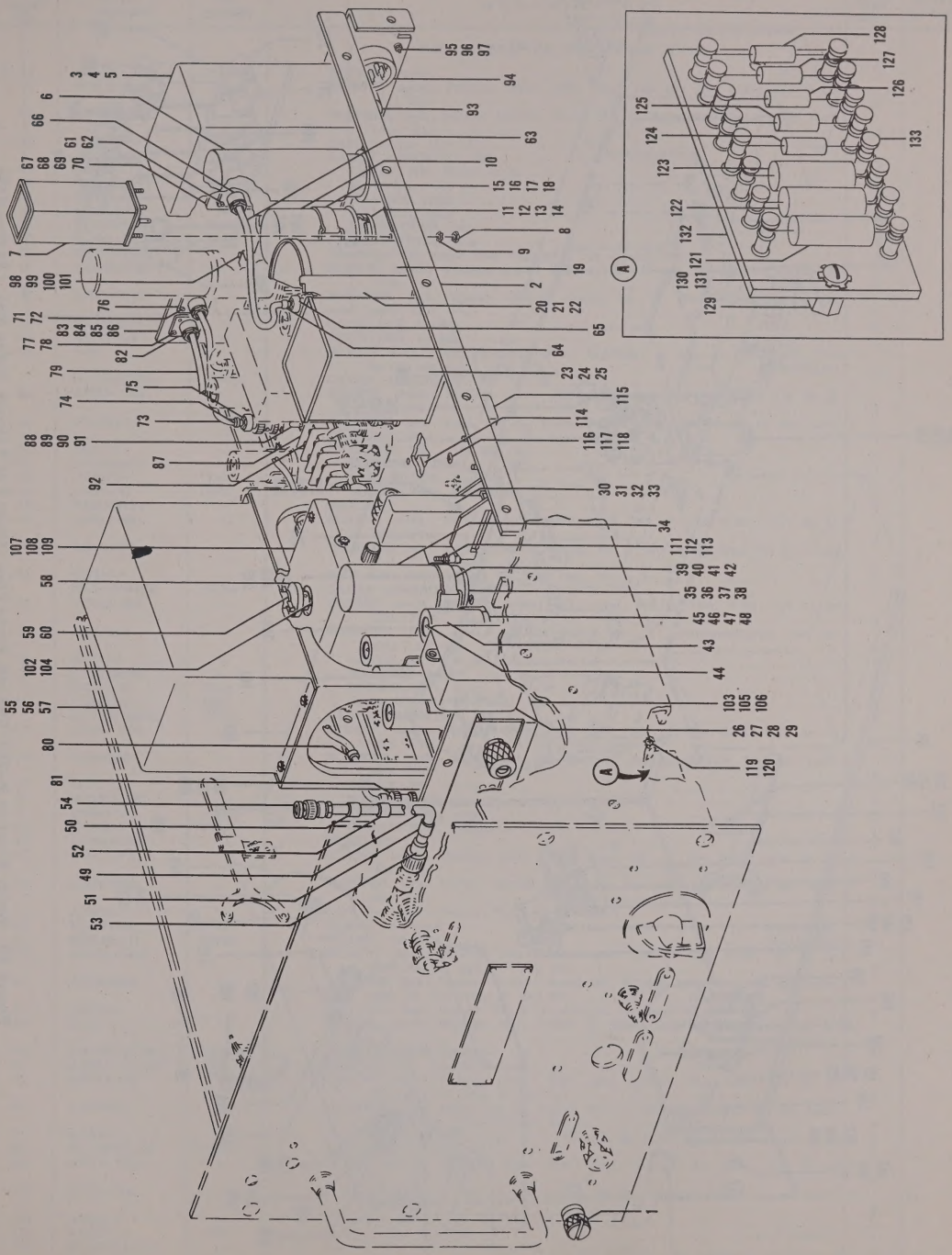

Figure 40. Radar Receiver R–307/CPS–6B, Front View (Sheet 1 of 2 sheets, Index Nos. 1 thru 133)

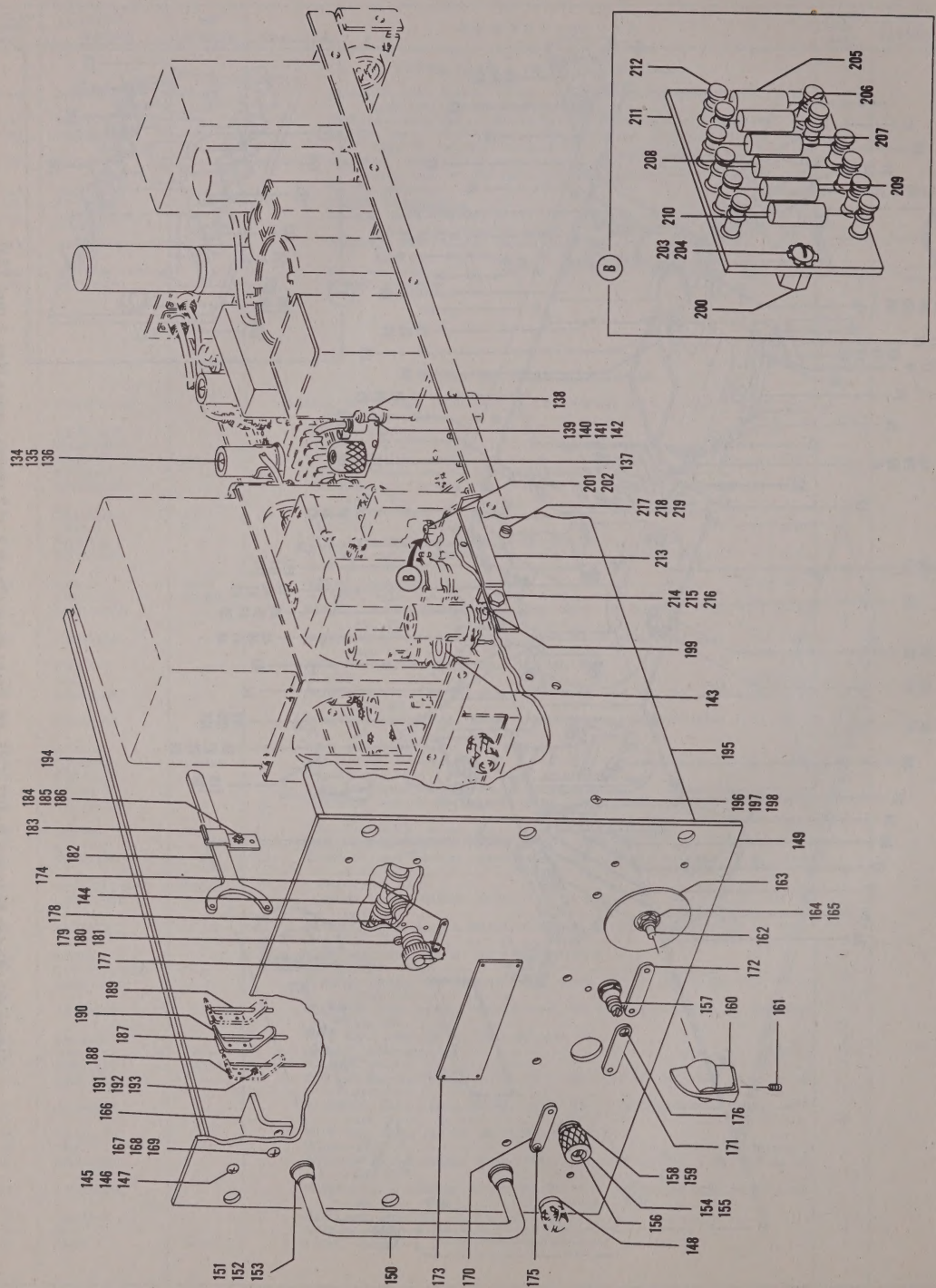

Figure 40. Radar Receiver R–307/CPS–6B, Front View (Sheet 2 of 2 sheets, Index Nos. 134 thru 219)

FIG. & INDEX NO.	PART NUMBER	REF SYMBOL	NOMENCLATURE 1 2 3 4 5 6 7	UNITS PER ASSY	APPLI-CATION
			RADAR RECEIVER R–307/CPS–6B (Cont)		
40–45	SO10M	XV610	. . SOCKET, tube	1	
–46	AN515–4R4	—	. . SCREW, mach: Phillips drive; RH; steel, cad pl; No. 4–40; 1/4 in lg (Att. Pt.)	2	
–47	AN936B4B	—	. . WASHER, lock: bronze, tinned; round, No. 4; shakeproof-type, tw ext teeth (Att. Pt.)	2	
–48	1060	—	. . NUT, anchor (Att. Pt.) (Cinch)	1	
	ML7006811G1	W607	. . CABLE ASSEMBLY, RF	1	
–49	RG71/U	—	. . . CABLE, RF: 16-3/4 in lg	1	
–50	NP136186E1	—	. . . MARKER, cable	1	
–51	NP137425A1	—	. . . MARKER, cable	1	
–52	NP140305F	—	. . . MARKER, cable	1	
–53	UG260/U	P608C	. . . CONNECTOR, plug	1	
–54	UG260/U	P503	. . . CONNECTOR, plug	1	
–55	ML7666443G1	—	. . CONVERTER, phase (See Figure 41 for breakdown)	1	
–56	AN520–10R8	—	. . SCREW, mach: Phillips drive; RH; steel, cad pl; No. 10–32; 1/2 in lg (Att. Pt.)	4	
–57	AN936B10B	—	. . WASHER, lock: bronze, tinned; round, No. 10; shakeproof-type, tw ext teeth (Att. Pt.)	4	
–58	ML7988925G1	—	. . COUPLING, flexible	1	
–59	A7012790P1	—	. . COUPLING, flexible	1	
–60	Coml	—	. . SCREW, set: Bristo six-spline drive; headless; ss, zinc pl; No. 4–40; 3/16 in lg; cup point (Att. Pt.) (Bristolco)	2	
	ML7400933G1	W603	. . CABLE ASSEMBLY, RF	1	
–61	AN520–3R6	—	. . SCREW, mach: Phillips drive; RH; steel, cad pl; No. 3–56; 3/8 in lg (Att. Pt.)	4	
–62	AN936A3	—	. . WASHER, lock: steel, cad pl; round, No. 3; shakeproof-type, tw int teeth (Att. Pt.)	4	
–63	RG55/U	—	. . . CABLE, RF: 9 in lg	1	
–64	NP140305H	—	. . . MARKER, cable	1	
–65	UG88/U	P601	. . . CONNECTOR, plug	1	
–66	UG291/U	J602	. . . CONNECTOR, receptacle	1	
–67	K7000201P1	—	. . BRACKET	1	
–68	AN515–8R7	—	. . SCREW, mach: Phillips drive; RH; steel, cad pl; No. 8–32; 7/16 in lg (Att. Pt.)	2	
–69	AN936B8B	—	. . WASHER, lock: bronze, tinned; round, No. 8; shakeproof-type, tw ext teeth (Att. Pt.)	2	
–70	AN340–8	—	. . NUT, hex: steel, cad pl; No. 8–32 (Att. Pt.)	2	
	ML7400933G2	W604	. . CABLE ASSEMBLY, RF	1	
–71	AN520–3R6	—	. . SCREW, mach: Phillips drive; RH; steel, cad pl; No. 3–56; 3/8 in lg (Att. Pt.)	4	
–72	AN936A3	—	. . WASHER, lock: steel, cad pl; round, No. 3; shakeproof-type, tw int teeth (Att. Pt.)	4	
–73	RG71/U	—	. . . CABLE, RF: 8 in lg	1	
–74	NP140305E	—	. . . MARKER, cable	1	
–75	UG260/U	P501	. . . CONNECTOR, plug	1	
–76	UG262/U	J603	. . . CONNECTOR, receptacle	1	
	ML7400933G3	W605	. . CABLE ASSEMBLY, RF	1	
–77	AN520–3R5	—	. . SCREW, mach: Phillips drive; RH; steel, cad pl; No. 3–56; 5/16 in lg (Att. Pt.)	4	
–78	AN936A3	—	. . WASHER, lock: steel, cad pl; No. 3; shakeproof-type, tw int teeth (Att. Pt.)	4	
–79	RG71/U	—	. . . CABLE, RF: 23 in lg	1	
–80	NP137425B1	—	. . . MARKER, cable	1	
–81	UG260/U	P608D	. . . CONNECTOR, plug	1	
–82	UG262/U	J604	. . . CONNECTOR, receptacle	1	
–83	K7000202P1	—	. . BRACKET	1	
–84	AN515–8R7	—	. . SCREW, mach: Phillips drive; RH; steel, cad pl; No. 8–32; 7/16 in lg (Att. Pt.)	2	
–85	AN936B8B	—	. . WASHER, lock: bronze, tinned; round, No. 8; shakeproof-type, tw ext teeth (Att. Pt.)	2	
–86	AN340–8	—	. . NUT, hex: steel, cad pl; No. 8–32 (Att. Pt.)	2	
–87	MSX8–141	TB601	. . BOARD, terminal (Jones HB)	1	
–88	MSX12–141	TB602	. . BOARD, terminal (Jones HB)	1	
–89	AN515–6R10	—	. . SCREW, mach: Phillips drive; RH; steel, cad pl; No. 6–32; 5/8 in lg (Att. Pt. for items 87 and 88)	8	
–90	AN936B6B	—	. . WASHER, lock: bronze, tinned; round, No. 6; shakeproof-type, tw ext teeth (Att. Pt. for items 87 and 88)	8	
–91	AN340–6	—	. . NUT, hex: steel, cad pl; No. 8–32 (Att. Pt. for items 87 and 88)	8	
–92	Coml	—	. . SCREW, mach: Phillips drive; Bind H; brass, cad pl; No. 6–32; 1/4 in lg (Amer Screw)	40	
–93	AN3102–22–33P	J605	. . CONNECTOR, receptacle	1	
–94	AN3102–22–33P	J606	. . CONNECTOR, receptacle	1	
–95	AN515–4R6	—	. . SCREW, mach: Phillips drive; RH; steel, cad pl; No. 4–40; 3/8 in lg (Att. Pt. for items 93 and 94)	8	
–96	AN936A4	—	. . WASHER, lock: steel, cad pl; round, No. 4; shakeproof-type, tw int teeth (Att. Pt. for items 93 and 94)	8	
–97	AN340–4	—	. . NUT, hex: steel, cad pl; No. 4–40 (Att. Pt. for items 93 and 94)	8	
–98	ML7460330G5	S2705B	. . SWITCH, interlock	1	
–99	AN515–6R10	—	. . SCREW, mach: Phillips drive; RH; steel, cad pl; No. 6–32; 5/8 in lg (Att. Pt.)	2	
–100	AN936B6B	—	. . WASHER, lock: bronze, tinned; round, No. 6; shakeproof-type, tw ext teeth (Att. Pt.)	2	
–101	AN340–6	—	. . NUT, hex: steel, cad pl; No. 6–32 (Att. Pt.)	2	
–102	V36MO	C626	. . CAPACITOR, variable (P J Nilson)	1	
–103	ML7772547G1	—	. . AMPLIFIER, RF (See Figure 44 for breakdown)	1	

FIG. & INDEX NO.	PART NUMBER	REF SYMBOL	NOMENCLATURE 1 2 3 4 5 6 7	UNITS PER ASSY	APPLI-CATION
			RADAR RECEIVER R–307/CPS–6B (Cont)		
40–104	AN515–6R6	—	. . SCREW, mach: Phillips drive; RH; steel, cad pl; No. 6–23; 3/8 in lg (Att. Pt. for items 102 and 103)	2	
–105	AN515–6R5	—	. . SCREW, mach: Phillips drive; RH; steel, cad pl; No. 6–32; 5/16 in lg (Att. Pt. for items 102 and 103)	2	
–106	AN936B6B	—	. . WASHER, lock: bronze, tinned; round, No. 6; shakeproof-type, tw ext teeth (Att. Pt. for items 102 and 103)	2	
–107	ML7772545G1	—	. . CONVERTER, phase (See Figure 45 for breakdown)	1	
–108	AN515–6R5	—	. . SCREW, mach: Phillips drive; RH; steel, cad pl; No. 6–32; 5/16 in lg (Att. Pt.)	4	
–109	AN936B6B	—	. . WASHER, lock: bronze, tinned; round, No. 6; shakeproof-type, tw ext teeth (Att. Pt.)	4	
✦					
–111	M7474939P24	L617	. . COIL, RF	1	
–112	AN340–6	—	. . NUT, hex: steel, cad pl; No. 6–32 (Att. Pt.)	6	
–113	AN936B6B	—	. . WASHER, lock: bronze, tinned; round, No. 6; shakeproof-type, tw ext teeth (Att. Pt.)	6	
–114	CP53B4FF104V	V646	. . CAPACITOR, fixed	1	
–115	CP53B4FF104V	C645	. . CAPACITOR, fixed	1	
–116	AN515–8R6	—	. . SCREW, mach: Phillips drive; RH; steel, cad pl; No. 8–32; 3/8 in lg (Att. Pt. for items 114 and 115)	4	
–117	AN936B8B	—	. . WASHER, lock: bronze, tinned; round, No. 8; shakeproof-type, tw ext teeth (Att. Pt. for items 114 and 115)	4	
–118	AN340–8	—	. . NUT, hex: steel, cad pl; No. 8–32 (Att. Pt. for items 114 and 115)	4	
	ML7000205G1	—	. . RESISTOR ASSEMBLY, fixed	1	
–119	AN515–6R4	—	. . SCREW, mach: Phillips drive; RH; steel, cad pl; No. 6–32; 1/4 in lg (Att. Pt.)	2	
–120	AN936B6B	—	. . WASHER, lock: bronze, tinned; round, No. 6; shakeproof-type, tw ext teeth (Att. Pt.)	2	
–121	RC30BF223J	R645	. . . RESISTOR, fixed	1	
–122	RC30BF223J	R640	. . . RESISTOR, fixed	1	
–123	RC30BF472J	R638	. . . RESISTOR, fixed	1	
–124	P7770419P159	R641	. . . RESISTOR, fixed	1	
–125	P7770419P203	R637	. . . RESISTOR, fixed	1	
–126	P7770419P199	R635	. . . RESISTOR, fixed	1	
–127	P7770419P231	R634	. . . RESISTOR, fixed	1	
–128	P7770419P231	R633	. . . RESISTOR, fixed	1	
–129	M7480544P8C	—	. . . POST, spacing	2	
–130	AN515–6–4	—	. . . SCREW, mach: slot drive; RH; steel, cad pl; No. 6–32; 1/4 in lg (Att. Pt.)	2	
–131	AN936B6B	—	. . . WASHER, lock: bronze, tinned; round, No. 6; shakeproof-type, tw ext teeth (Att. Pt.)	2	
	ML7000203G1	—	. . . BOARD, terminal	1	
–132	K7000203P2	—	. . . . PANEL	1	
–133	T100–3	—	. . . . TERMINAL, stud (Bead Chain)	16	
–134	ML7666800G1	—	. . RECEIVER, radar (See Figure 46 for breakdown)	1	
–135	AN515–8R5	—	. . SCREW, mach: Phillips drive; RH; steel, cad pl; No. 8–32; 5/16 in lg (Att. Pt.)	6	
–136	AN936B8B	—	. . WASHER, lock: bronze, tinned; round, No. 8; shakeproof-type, tw ext teeth (Att. Pt.)	6	
–137	ML7666442G1	—	. . OSCILLATOR, RF (See Figure 47 for breakdown)	1	
–138	275–5	—	. . MOUNT, vibration (LN Barry)	4	
–139	W7354006P17	—	. . POST, spacing	4	
–140	AN515–6R16	—	. . SCREW, mach: Phillips drive; RH; steel, cad pl; No. 6–32; 1 in lg (Att. Pt. for items 137, 138 and 139)	4	
–141	Coml	—	. . WASHER, flat: brass, cad pl; round, 5/32 in ID, 7/16 in OD, 0.040 in thk (Att. Pt. for items 137, 138 and 139) (Wrought Washer)	4	
–142	AN936B6B	—	. . WASHER, lock: bronze, tinned; round, No. 6; shakeproof-type, tw ext teeth (Att. Pt. for items 137, 138 and 139)	4	
–143	M2R53P14	—	. . GROMMET	2	
–144	UG274/U	E608	. . CONNECTOR, adapter (Includes E608B, C, D)	1	
	ML7700311G1	—	. . PANEL	1	
–145	AN520B10R7	—	. . SCREW, mach: Phillips drive; RH; brass, black oxidized; No. 10–32; 7/16 in lg (Att. Pt.)	8	
–146	AN936B10B	—	. . WASHER, lock: bronze, tinned; round, No. 10; shakeproof-type, tw ext teeth (Att. Pt.)	8	
–147	AN345–10	—	. . NUT, hex: steel, cad pl; No. 10–32 (Att. Pt.)	8	
–148	K7128235P2	—	. . . BUSHING	6	
–149	P7700311P2	—	. . . PANEL	1	
–150	K7002870P1	—	. . HANDLE	2	
–151	K7002869P1	—	. . WASHER, extruded	4	
–152	AN345–10	—	. . NUT, hex: steel, cad pl; No. 10–32 (Att. Pt. for items 150 and 151)	4	
–153	AN936B10B	—	. . WASHER, lock: bronze, tinned; round, No. 10; shakeproof-type, tw ext teeth (Att. Pt. for items 150 and 151)	4	
–154	M7481469P1	—	. . NUT, lock	2	
–155	10061	—	. . COLLET (Millen)	2	
–156	RA30A2SD502AK	R632	. . RESISTOR, variable	1	
–157	P7768146P5	R636	. . RESISTOR, variable	1	
–158	K7870535P1	—	. . NUT, hex (Att. Pt. for item 156)	1	
–159	AN936A616B	—	. . WASHER, lock: bronze, tinned; round, 3/8 in; shakeproof-type, tw int teeth (Att. Pt. for items 156 and 157)	2	
–160	K7886574P2	—	. . KNOB	1	
–161	Coml	—	. . SCREW, set: Bristo six-spline drive; headless; steel, cad pl; No. 8–32; 1/4 in lg; cup point (Att. Pt.) (Bristolco)	1	
–162	P7770998P11	S601	. . SWITCH, rotary	1	
–163	NP137454	—	. . PLATE, identification	1	

FIG. & INDEX NO.	PART NUMBER	REF SYMBOL	NOMENCLATURE 1 2 3 4 5 6 7	UNITS PER ASSY	APPLI-CATION
			RADAR RECEIVER R–307/CPS–6B (Cont)		
40–164	K7870535P1	—	. . NUT, hex (Att. Pt. for items 162 and 163)	1	
–165	AN936A616B	—	. . WASHER, lock: bronze, tinned; round, 3/8 in; shakeproof-type, tw int teeth (Att. Pt. for items 162 and 163)	1	
–166	K7002269P1	—	. . BRACKET	1	
–167	AN520B10R8	—	. . SCREW, mach: Phillips drive; RH; brass, black oxidized; No. 10–32; 1/2 in lg (Att. Pt.)	2	
–168	AN936B10B	—	. . WASHER, lock: bronze, tinned; round, No. 10; shakeproof-type, tw ext teeth (Att. Pt.)	2	
–169	AN345–10	—	. . NUT, hex: steel, cad pl; No. 10–32 (Att. Pt.)	2	
–170	NP137463D	—	. . PLATE, identification	1	
–171	NP137463E	—	. . PLATE, identification	1	
–172	NP137463C	—	. . PLATE, identification	1	
–173	NP137556B	—	. . PLATE, identification	1	
–174	NP125992G	—	. . PLATE, identification	1	
–175	Coml	—	. . SCREW, self-tapping: Phillips drive; Bind H; SS; black oxidized; No. 4–40; 1/4 in lg (Att. Pt. for items 170, 172, 173 and 174) (Shakeproof)	10	
–176	Coml	—	. . SCREW, self-tapping: Phillips drive; Bind H; SS; black oxidized; No. 4–40; 3/16 in lg (Att. Pt. for item 171) (Shakeproof)	1	
–177	CW123/U	—	. . CAP	1	
–178	UG414/U	J608	. . CONNECTOR, receptacle (Includes J608A and B)	1	
–179	AN520–3–4	—	. . SCREW, mach: slot drive; RH; steel, cad pl; No. 3–56; 1/4 in lg (Att. Pt.)	3	
–180	AN520–3–6	—	. . SCREW, mach: slot drive; RH; steel, cad pl; No. 3–56; 3/8 in lg (Att. Pt. for items 177 and 178)	1	
–181	1903	—	. . WASHER, lock: steel, cad pl; round, No. 3; shakeproof-type, tw ext teeth (Att. Pt. for items 177 and 178) (Shakeproof)	4	
–182	ML7000226G1	—	. . WRENCH	1	
–183	K7002853P1	—	. . CLIP	1	
–184	AN515–6R5	—	. . SCREW, mach: Phillips drive; RH; steel, cad pl; No. 6–32; 5/16 in lg (Att. Pt.)	2	
–185	AN936B6B	—	. . WASHER, lock: bronze, tinned; round, No. 6; shakeproof-type, tw ext teeth (Att. Pt.)	2	
–186	AN340–6	—	. . NUT, hex: steel, cad pl; No. 6–32 (Att. Pt.)	2	
–187	K7876451P1	—	. . WRENCH	1	
–188	K7876451P4	—	. . WRENCH	1	
–189	K7871267P1	—	. . WRENCH	1	
–190	K7126174P1	—	. . HOLDER, wrench	3	
–191	AN515–4R5	—	. . SCREW, mach: Phillips drive; RH; steel, cad pl; No. 4–40; 5/16 in lg (Att. Pt.)	6	
–192	AN936B4B	—	. . WASHER, lock: bronze, tinned; round, No. 4; shakeproof-type, tw ext teeth (Att. Pt.)	6	
–193	AN340–4	—	. . NUT, hex: steel, cad pl; No. 4–40 (Att. Pt.)	4	
–194	P7700312P1	—	. . GUSSET	1	
–195	P7700312P2	—	. . GUSSET	1	
–196	AN520–10R6	—	. . SCREW, mach: Phillips drive; RH; steel, cad pl; No. 10–32; 3/8 in lg (Att. Pt. for items 194 and 195)	12	
–197	AN936B10B	—	. . WASHER, lock: bronze, tinned; round, No. 10; shakeproof-type, tw ext teeth (Att. Pt. for items 194 and 195)	12	
–198	AN345–10	—	. . NUT, hex: steel, cad pl; No. 10–32 (Att. Pt. for items 194 and 195)	12	
–199	RC30BF471J	R639	. . RESISTOR, fixed	1	
–200	M7480544P8P	—	. . POST, spacing	2	
–201	AN515–6R6	—	. . SCREW, mach: Phillips drive; RH; steel, cad pl; No. 6–32; 3/8 in lg (Att. Pt.)	2	
–202	AN936B6B	—	. . WASHER, lock: bronze, tinned; round, No. 6; shakeproof-type, tw ext teeth (Att. Pt.)	2	
	ML7003704G1	—	. . RESISTOR ASSEMBLY, fixed	1	
–203	AN515–6R6	—	. . SCREW, mach: Phillips drive; RH; steel, cad pl; No. 6–32; 3/8 in lg (Att. Pt.)	2	
–204	AN936B6B	—	. . WASHER, lock: bronze, tinned; round, No. 6; shakeproof-type, tw ext teeth (Att. Pt.)	2	
–205	RC30BF101J	R648	. . . RESISTOR, fixed	1	
–206	RC30BF101J	R649	. . . RESISTOR, fixed	1	
–207	RC30BF153J	R650	. . . RESISTOR, fixed	1	
–208	RC30BF153J	R651	. . . RESISTOR, fixed	1	
–209	RC30BF153J	R652	. . . RESISTOR, fixed	1	
–210	RC30BF153J	R653	. . . RESISTOR, fixed	1	
	ML7003698G1	—	. . . BOARD, terminal	1	
–211	K7003698P2	—	. . . . PANEL	1	
–212	M7475333P3	—	. . . . TERMINAL, stud	1	
–213	ML7005399G2	—	. . PLATE, catch	1	
–214	K7003070P1	—	. . SCREW, mach (Att. Pt.)	1	
–215	AN936B10B	—	. . WASHER, lock: bronze, tinned; round, No. 10; shakeproof-type, tw ext teeth (Att. Pt.)	1	
–216	AN345–10	—	. . NUT, hex: steel, cad pl; No. 10–32 (Att. Pt.)	1	
–217	K7003069P1	—	. . SCREW, mach	2	
–218	AN936B6B	—	. . WASHER, lock: bronze, tinned; round, No. 6; shakeproof-type, tw ext teeth	2	
–219	AN340–6	—	. . NUT, hex: steel, cad pl; No. 6–32	2	

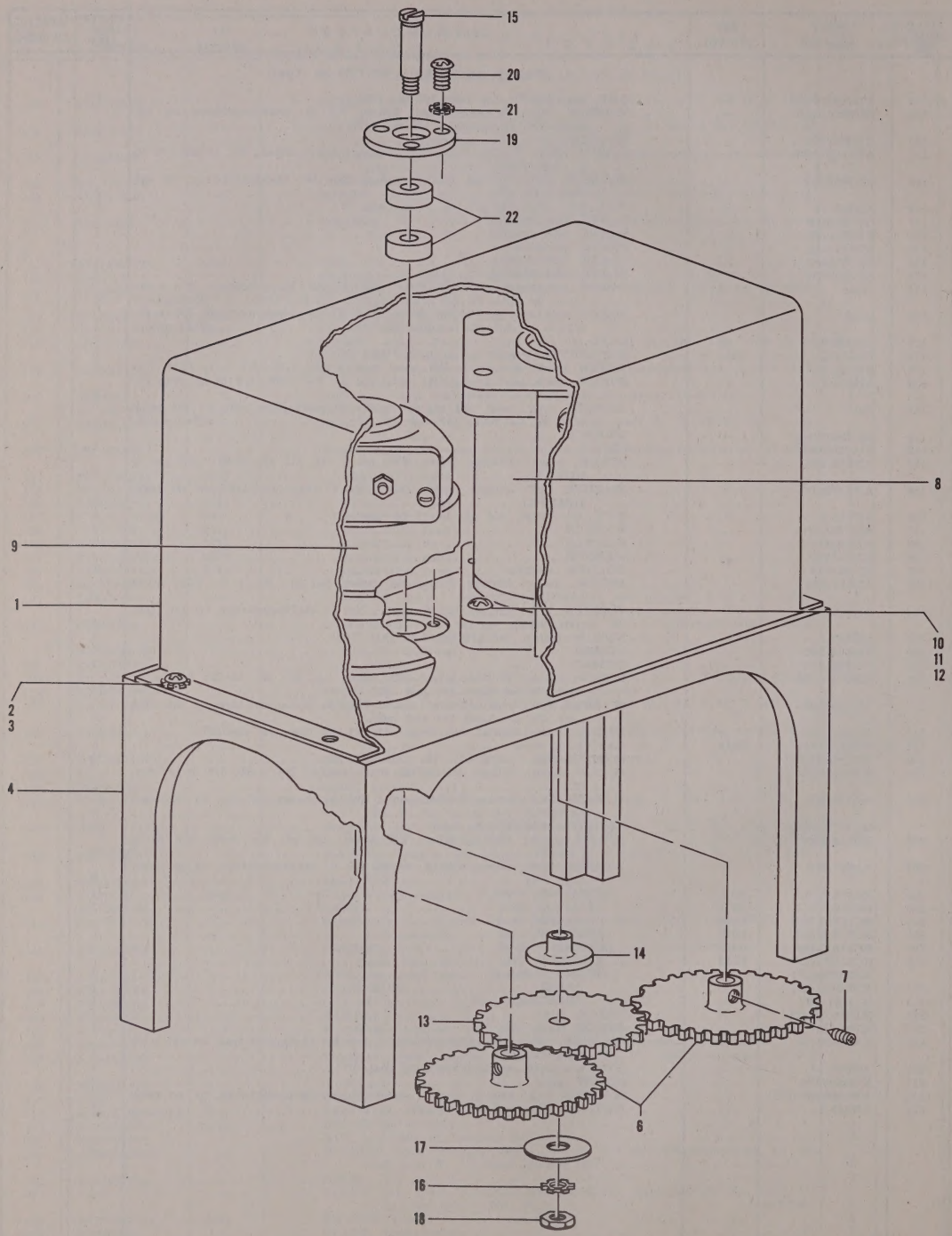

Figure 41. Phase Converter

FIG. & INDEX NO.	PART NUMBER	REF SYMBOL	NOMENCLATURE 1 2 3 4 5 6 7	UNITS PER ASSY	APPLI-CATION
			PHASE CONVERTER		
41–	ML7666443G1	—	. . PHASE CONVERTER (See Figure 40–55 for next higher assembly)	Ref	
–1	ML7700300G1	—	. . . COVER	3	
–2	AN515–6R4	—	. . . SCREW, mach: Phillips drive; RH; steel, cad pl; No. 6–32; 1/4 in lg (Att. Pt.)	4	
–3	AN936B6B	—	. . . WASHER, lock: bronze, tinned; round, No. 6; shakeproof-type, tw ext teeth (Att. Pt.)	4	
–4	P7772549P1	—	. . . CHASSIS	1	
✦					
–6	M7400859P1	—	. . . GEAR	2	
–7	Coml	—	. . . SCREW, set: Bristo six-spline drive; headless; steel, cad pl; No. 4–40; 1/8 in lg; cup point (Att. Pt.) (Bristolco)	4	
–8	FPE25–11	B602	. . . MOTOR, AC (See Figure 42 for breakdown) (Diehl)	1	
–9	J36	B601	. . . GENERATOR, DC (See Figure 43 for breakdown) (Eastern Devices)	1	
–10	AN515–8R12	—	. . . SCREW, mach: Phillips drive; RH; steel; cad pl; No. 8–32; 3/4 in lg (Att. Pt. for items 8 and 9)	6	
–11	AN936B8B	—	. . . WASHER, lock: bronze, tinned; round, No. 8; shakeproof-type, tw ext teeth (Att. Pt. for items 8 and 9)	6	
–12	AN340–8	—	. . . NUT, hex: steel, cad pl; No. 8–32 (Att. Pt. for items 8 and 9)	6	
–13	M7400862P1	—	. . . GEAR	1	
–14	K7000062P1	—	. . . COLLAR, spacing	1	
–15	K7000063P1	—	. . . SCREW, mach (Att. Pt. for items 13 and 14)	1	
–16	AN936B8B	—	. . . WASHER, lock: bronze, tinned; round, No. 8; shakeproof-type, tw ext teeth (Att. Pt. for items 13 and 14)	1	
–17	Coml	—	. . . WASHER, flat: steel, cad pl; round, 13/64 in ID, 3/4 in OD, 0.0763 in thk (Att. Pt. for items 13 and 14) (Wrought Washer)	1	
–18	AN340–8	—	. . . NUT, hex: steel, cad pl; No. 8–32 (Att. Pt. for items 13 and 14)	1	
–19	K7000065P1	—	. . . RETAINER, bearing	1	
–20	AN515B4R4	—	. . . SCREW, mach: Phillips drive; RH; brass, black oxidized; No. 4–40; 1/4 in lg (Att. Pt.)	3	
–21	AN936B4B	—	. . . WASHER, lock: bronze, tinned; round, No. 4; shakeproof-type, tw ext teeth (Att. Pt.)	3	
–22	K7000064P1	—	. . . BEARING, ball	2	

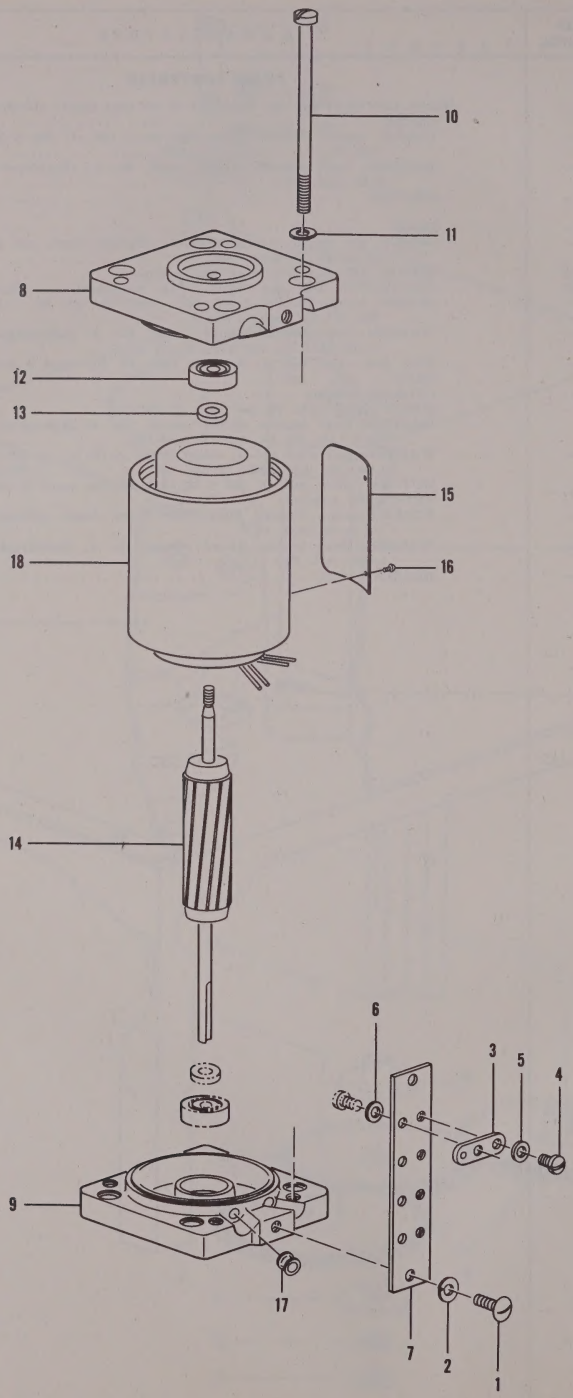

Figure 42. AC Motor

FIG. & INDEX NO.	PART NUMBER	REF SYMBOL	NOMENCLATURE 1 2 3 4 5 6 7	UNITS PER ASSY	APPLI-CATION
			AC MOTOR		
42–	FPE25–11	B602	. . . AC MOTOR (See Figure 41–8 for next higher assembly).....(Diehl)	Ref	
	5A97	—	. . . . BOARD, terminal .....(Diehl)	1	
–1	AN515–6–4	—	. . . . SCREW, mach: slot drive; RH; steel, cad pl; No. 6–32; 1/4 in lg (Att. Pt.)	2	
–2	AN935–6	—	. . . . WASHER, lock: steel; No. 6 (Att. Pt.).....	2	
–3	982556	—	. . . . . TERMINAL, lug .....(Diehl)	4	
–4	Coml	—	. . . . . SCREW, mach: slot drive; Fil H; brass, tin pl; No. 6–32; 1/4 in lg (Att. Pt.).....(Amer Screw)	8	
–5	190232	—	. . . . . WASHER, flat (Att. Pt.).....(Diehl)	4	
–6	701865	—	. . . . . WASHER, flat (Att. Pt.).....(Diehl)	4	
–7	895538	—	. . . . . PANEL .....(Diehl)	1	
–8	895689	—	. . . . COVER .....(Diehl)	1	
–9	895532–2	—	. . . . COVER .....(Diehl)	1	
–10	Coml	—	. . . . SCREW, mach: slot drive; Fil H; steel, cad pl; No. 8–32; 2-3/4 in lg; threaded portion 9/16 in lg (Att. Pt. for items 8 and 9) .....(Amer Screw)	4	
–11	AN935–8	—	. . . . WASHER, lock: steel, No. 8 (Att. Pt. for items 8 and 9).....	4	
–12	7034	—	. . . . BEARING, ball .....(ND)	2	
–13	931587	—	. . . . SHIM .....(Diehl)	2	
–14	982033	—	. . . . ROTOR, motor .....(Diehl)	1	
–15	NP	—	. . . . PLATE, identification .....(Diehl)	1	
–16	Coml	—	. . . . SCREW, self-tapping: Phillips drive; Bind H; SS; No. 4–40; 3/16 in lg (Att. Pt.).....(Shakeproof)	4	
–17	M2R53P1	—	. . . . GROMMET	4	
–18	1B/66	—	. . . . MOTOR STATOR-HOUSING SUBASSEMBLY .....(Diehl)	1	

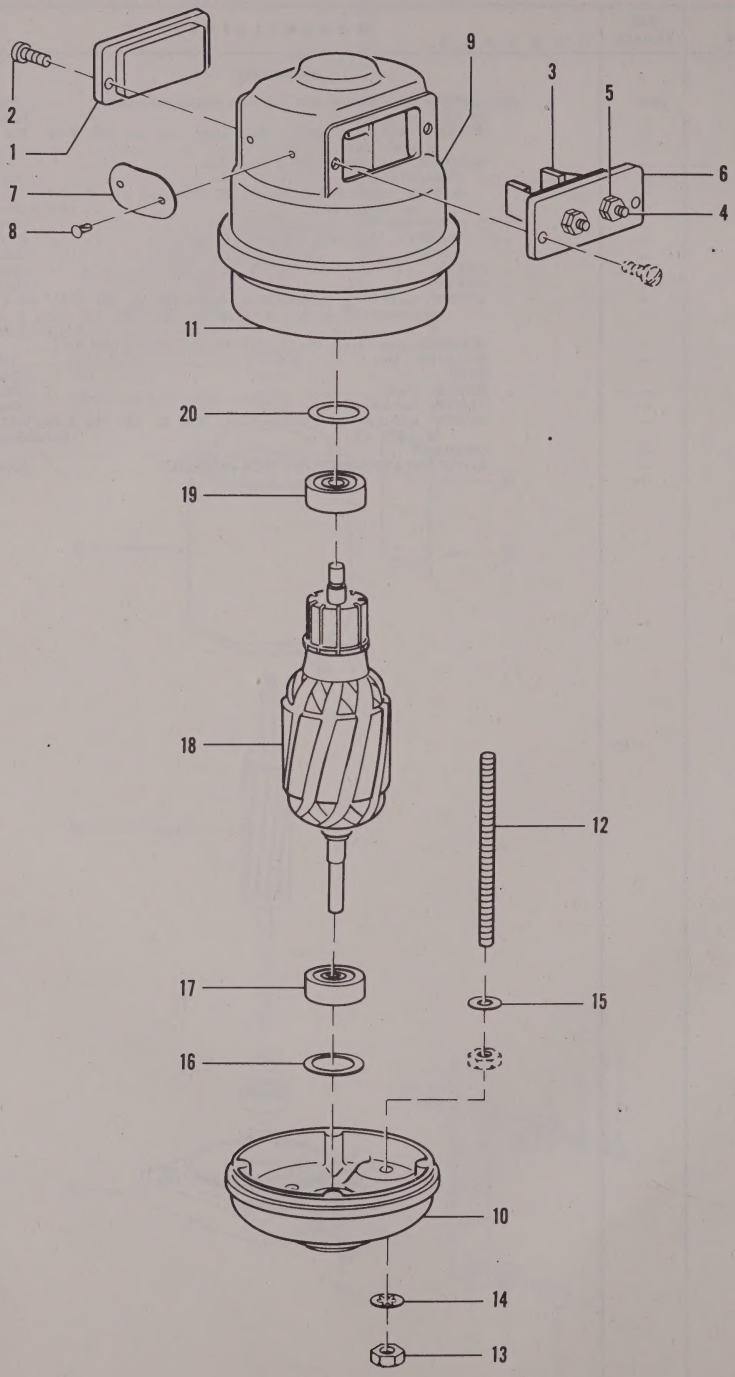

Figure 43. DC Generator

FIG. & INDEX NO.	PART NUMBER	REF SYMBOL	NOMENCLATURE 1 2 3 4 5 6 7	UNITS PER ASSY	APPLI-CATION
			DC GENERATOR		
43–	2496–5	—	. . . DC GENERATOR (See Figure 41–9 for next higher assembly) ..... (Eastern Devices)	Ref	
–1	2750	—	. . . . PLATE, cover .....(Eastern Devices)	1	
	2162–2	—	. . . . BRUSH SUBASSEMBLY, electrical contact.....(Eastern Devices)	1	
–2	Coml	—	. . . . SCREW, mach: slot drive; Fil H; brass, nickel pl; No. 6–32; 5/16 in lg (Att. Pt. for items 1 and 2162–2).....(Amer Screw)	4	
–3	2161–1	—	. . . . . BRUSH, electrical contact .....(Eastern Devices)	2	
–4	Coml	—	. . . . . SCREW, mach: slot drive; Fil H; SS; No. 6–32; 5/16 in lg (Att. Pt.) .....(Amer Screw)	2	
–5	Coml	—	. . . . . NUT, hex: brass, cad pl; No. 4–40 (Att. Pt.).....(Amer Screw)	4	
–6	2750A	—	. . . . . PLATE, mounting .....(Eastern Devices)	1	
–7	3527–32	—	. . . . PLATE, identification .....(Eastern Devices)	1	
–8	AN535–00–2	—	. . . . SCREW, drive: RH; steel, cad pl; No. 00 (Att. Pt.)	2	
–9	260B1	—	. . . . HOUSING .....(Eastern Devices)	1	
–10	261A4	—	. . . . END, shield .....(Eastern Devices)	1	
–11	761–1	—	. . . . STATOR, generator .....(Eastern Devices)	1	
–12	5595–8	—	. . . . STUD (Att. Pt. for items 9, 10, and 11).....(Eastern Devices)	2	
–13	AN340–8	—	. . . . NUT, hex: steel, cad pl; No. 8–32 (Att. Pt. for items 9, 10, and 11)....	4	
–14	AN936A8	—	. . . . WASHER, lock: steel, cad pl; round, No. 8; shakeproof-type, tw int teeth (Att. Pt. for items 9, 10, and 11).....	2	
–15	AN960–8	—	. . . . WASHER, flat: steel, cad pl; round, No. 8 (Att. Pt. for item 11).....	2	
–16	3625	—	. . . . SHIM .....(Eastern Devices)	AR	
–17	1003A–1	—	. . . . BEARING, ball .....(Eastern Devices)	1	
–18	950–2	—	. . . . ROTOR, generator .....(Eastern Devices)	1	
–19	1003A–1	—	. . . . BEARING, ball .....(Eastern Devices)	1	
–20	3625	—	. . . . SHIM .....(Eastern Devices)	AR	

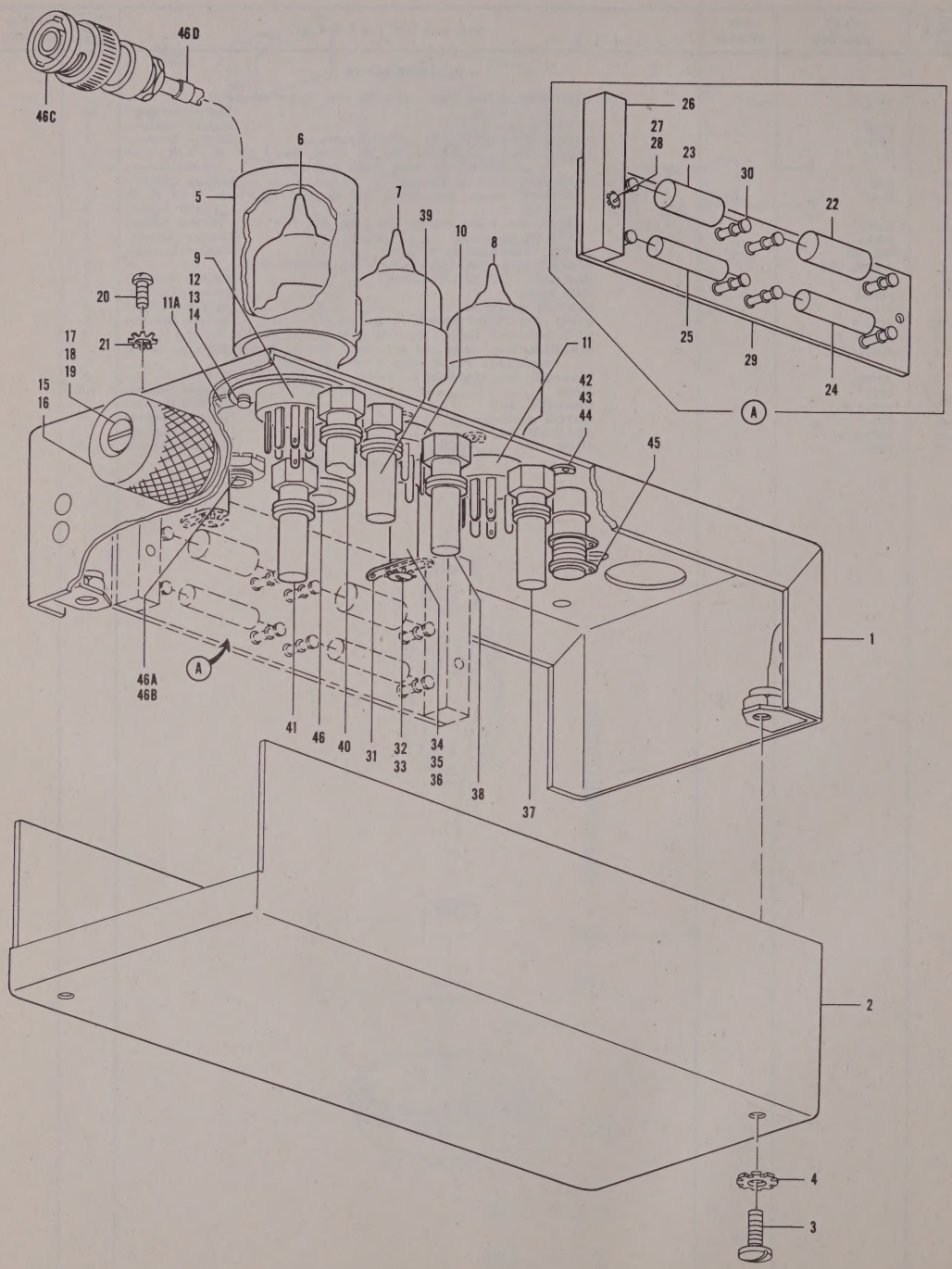

Figure 44. RF Amplifier, Bottom-Front View (Sheet 1 of 2 sheets, Index Nos. 1 thru 46D)

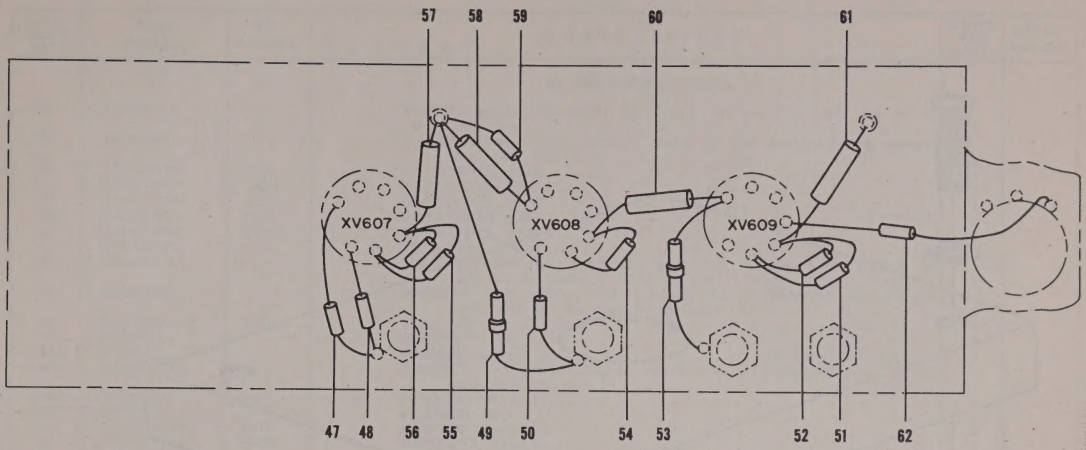

Figure 44. RF Amplifier, Bottom View (Sheet 2 of 2 sheets, Index Nos. 47 thru 62)

FIG. & INDEX NO.	PART NUMBER	REF SYMBOL	1 2 3 4 5 6 7 NOMENCLATURE	UNITS PER ASSY	APPLI-CATION
			RF AMPLIFIER		
44–	ML7772547G1	—	. . RF AMPLIFIER (See Figure 40–103 for next higher assembly)	Ref	
–1	ML7772546G1	—	. . . CHASSIS	1	
–2	ML7772548G1	—	. . . COVER	1	
–3	AN515–6–6	—	. . . SCREW, mach: slot drive; RH; steel, cad pl; No. 6–32; 3/8 in lg (Att. Pt.)	2	
–4	AN936B6B	—	. . . WASHER, lock: bronze, tinned; round, No. 6; shakeproof-type, tw ext teeth (Att. Pt.)	2	
–5	SOS3	—	. . . SHIELD, tube	3	
–6	6AK5	V609	. . . TUBE, electron	1	
–7	6AK5	V608	. . . TUBE, electron	1	
–8	6AK5	V607	. . . TUBE, electron	1	
–9	SO10M	XV609	. . . SOCKET, tube	1	
–10	SO10M	XV608	. . . SOCKET, tube	1	
–11	SO10M	XV607	. . . SOCKET, tube	1	
–11A	K7878455P1	—	. . . TERMINAL, lug	1	
–12	AN515–4–3	—	. . . SCREW, mach: slot drive; RH; steel, cad pl; No. 4–40; 3/16 in lg (Att. Pt. for items 9 thru 11A)	6	
–13	AN936B4B	—	. . . WASHER, lock: bronze, tinned; round, No. 4; shakeproof-type, tw ext teeth (Att. Pt. for items 9 thru 11A)	6	
–14	1028	—	. . . NUT, anchor (Att. Pt. for items 9 thru 11A) (Cinch)	3	
–15	M7481469P1	—	. . . NUT, lock	1	
–16	10061	—	. . . COLLET (Millen)	1	
–17	P7770835P9	R629	. . . RESISTOR, variable	1	
–18	K7870535	—	. . . NUT, hex (Att. Pt.)	1	
–19	AN936A616B	—	. . . WASHER, lock: bronze, tinned; round, 3/8 in; shakeproof-type, tw ext teeth (Att. Pt.)	2	
	ML7000060G1	—	. . . CAPACITOR-COIL SUBASSEMBLY	1	
–20	AN515–4–4	—	. . . SCREW, mach: slot drive; RH; steel, cad pl; No. 4–40; 1/4 in lg (Att. Pt.)	2	
–21	AN936B4B	—	. . . WASHER, lock: bronze, tinned; round, No. 4; shakeproof-type, tw ext teeth (Att. Pt.)	2	
–22	CC21UJ150J	C631	. . . . CAPACITOR, fixed	1	
–23	CC21UJ150J	C642	. . . . CAPACITOR, fixed	1	
–24	ML7400881G1	L611	. . . . COIL, RF	1	
–25	ML7400881G1	L615	. . . . COIL, RF	1	
–26	K7000061P1	—	. . . . POST, supporting	2	
–27	AN515–4–5	—	. . . . SCREW, mach: slot drive; RH; steel, cad pl; No. 4–40; 5/16 in lg (Att. Pt.)	2	
–28	AN936B4B	—	. . . . WASHER, lock: bronze, tinned; round, No. 4; shakeproof-type, tw ext teeth (Att. Pt.)	2	
	ML7000059G1	—	. . . . BOARD, terminal	1	
–29	K7000058P1	—	. . . . . PANEL	1	
–30	T84–2	—	. . . . . TERMINAL, stud (Bead Chain)	8	
–31	K7878455P1	—	. . . TERMINAL, lug	3	
–32	AN515–6–4	—	. . . SCREW, mach: slot drive; RH; steel, cad pl; No. 6–32; 1/4 in lg (Att. Pt.)	2	
–33	AN936B6B	—	. . . WASHER, lock: bronze, tinned; round, No. 6; shakeproof-type, tw ext teeth (Att. Pt.)	2	
–34	M7462416P2	—	. . . INSULATOR, standoff	2	

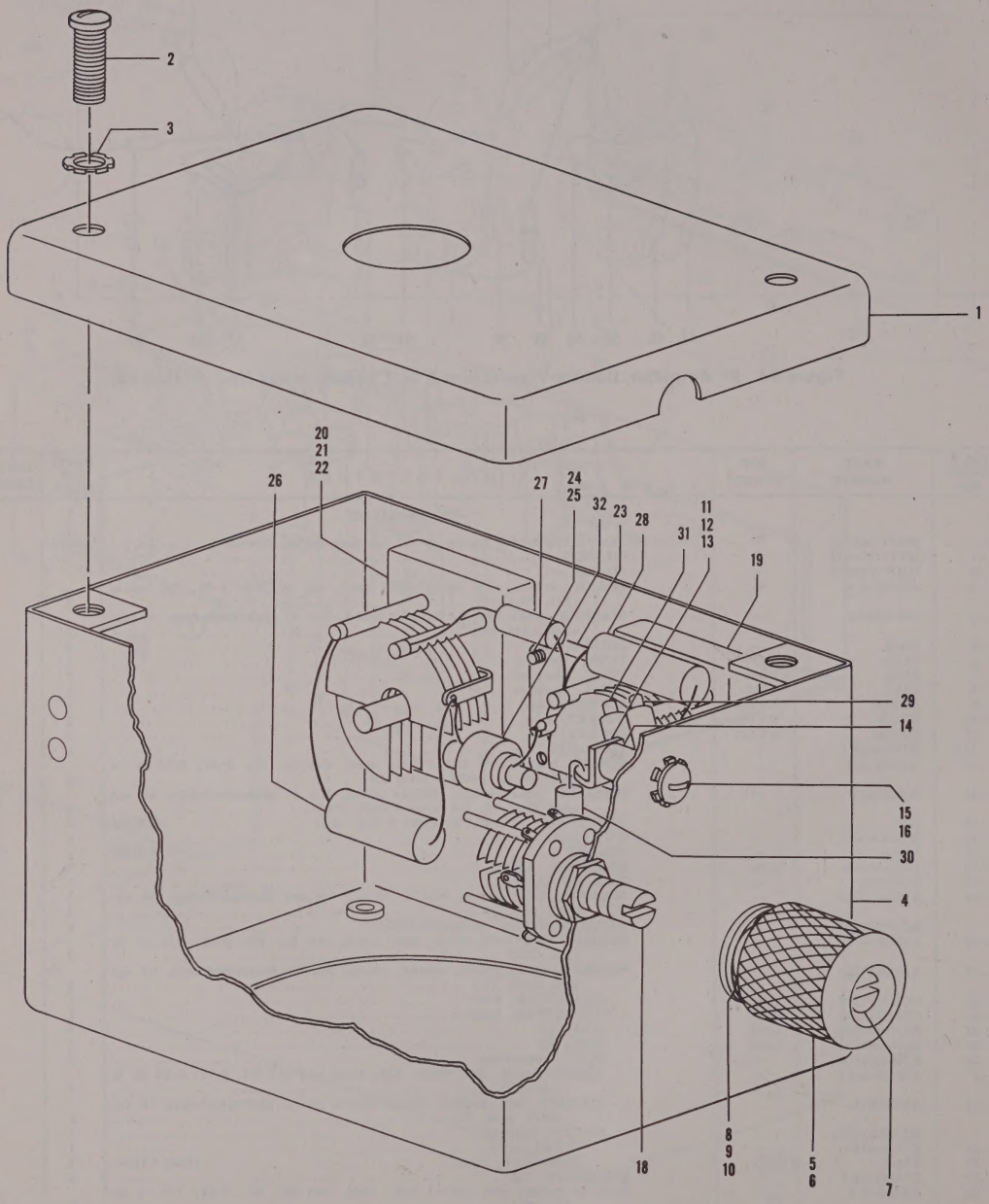

Figure 45. Phase Converter

FIG. & INDEX NO.	PART NUMBER	REF SYMBOL	NOMENCLATURE 1 2 3 4 5 6 7	UNITS PER ASSY	APPLI-CATION
			RF AMPLIFIER (Cont)		
44–35	AN515–6–4	—	. . . SCREW, mach: slot drive; RH; steel, cad pl; No. 6–32; 1/4 in lg (Att. Pt.)	2	
–36	AN936B6B	—	. . WASHER, lock: bronze, tinned; round, No. 6; shakeproof-type, tw ext teeth (Att. Pt.)	2	
–37	M7483176P2	C632	. . . CAPACITOR, fixed	1	
–38	M7483176P2	C633	. . . CAPACITOR, fixed	1	
–39	M7483176P3	C637	. . . CAPACITOR, fixed	1	
–40	M7483176P2	C638	. . . CAPACITOR, fixed	1	
–41	M7483176P2	C643	. . . CAPACITOR, fixed	1	
–42	K7878455P1	—	. . . TERMINAL, lug	3	
–43	AN515–4–3	—	. . . SCREW, mach: slot drive; RH; steel, cad pl; No. 4–40; 3/16 in lg (Att. Pt. for items 37 thru 42)	5	
–44	AN936B4B	—	. . . WASHER, lock: bronze, tinned; round, No. 4; shakeproof-type, tw ext teeth (Att. Pt. for items 37 thru 42)	5	
–45	ML7000380G7	L610	. . . COIL, RF	1	
–46	M2R53P4	—	. . . GROMMET	1	
–46A	D–102–B	—	. . . HANGER, cable (Industrial Products Co)	1	
–46B	AN936B516B	—	. . . WASHER, lock: bronze, tinned; round, 5/16 in; shakeproof-type, tw ext teeth (Att. Pt.)	1	
–46C	UG–260/U	P504	. . . CONNECTOR, plug	1	
–46D	NP140046I	—	. . . MARKER, cable	1	
–47	P7770419P183	R647	. . . RESISTOR, fixed	1	
–48	P7770419P119	R623	. . . RESISTOR, fixed	1	
–49	ML7400881G10	L612	. . . COIL, RF	1	
–50	P7770419P131	R644	. . . RESISTOR, fixed	1	
–51	P7770419P183	R631	. . . RESISTOR, fixed	1	
–52	P7770419P183	R630	. . . RESISTOR, fixed	1	
–53	ML7400881G11	L613	. . . COIL, RF	1	
–54	P7770419P143	R627	. . . RESISTOR, fixed	1	
–55	P7770419P183	R625	. . . RESISTOR, fixed	1	
–56	P7770419P183	R624	. . . RESISTOR, fixed	1	
–57	CC26UK101J	C634	. . . CAPACITOR, fixed	1	
–58	CC26UK101J	C635	. . . CAPACITOR, fixed	1	
–59	P7770419P199	R626	. . . RESISTOR, fixed	1	
–60	CC26UK101J	C636	. . . CAPACITOR, fixed	1	
–61	CC26UK101J	C639	. . . CAPACITOR, fixed	1	
–62	P7770419P199	R628	. . . RESISTOR, fixed	1	
			PHASE CONVERTER		
45–	ML7772545G1	—	. . PHASE CONVERTER (See Figure 40–107 for next higher assembly)	Ref	
–1	ML7400851G1	—	. . . COVER	1	
–2	AN515–6–7	—	. . . SCREW, mach: slot drive; RH; steel, cad pl; No. 6–32; 7/16 in lg (Att. Pt.)	2	
–3	AN936B6B	—	. . . WASHER, lock: bronze, tinned; round, No. 6; shakeproof-type, tw ext teeth (Att. Pt.)	2	
–4	ML7772544G1	—	. . . CHASSIS	1	
–5	M7481469P1	—	. . . NUT, lock	1	
–6	10061	—	. . . COLLET (Millen)	1	
–7	P7770835P1	R619	. . . RESISTOR, variable	1	
–8	K7870535P1	—	. . . NUT, hex (Att. Pt.)	1	
–9	AN936A616B	—	. . . WASHER, lock: bronze, tinned; round, 3/8 in; shakeproof-type, tw int teeth (Att. Pt.)	1	
–10	Coml	—	. . . WASHER, flat: steel, cad pl; round, 11/32 in ID, 5/8 in OD, .040 in thk (Att. Pt.) (Wrought Washer)	1	
–11	K7878455P1	—	. . . TERMINAL, lug	1	
–12	AN515–6–4	—	. . . SCREW, mach: slot drive; RH; steel, cad pl; No. 6–32; 1/4 in lg (Att. Pt.)	1	
–13	AN936B6B	—	. . . WASHER, lock: bronze, tinned; round, No. 6; shakeproof-type, tw ext teeth (Att. Pt.)	1	
–14	M7462416P2	—	. . . INSULATOR, standoff	1	
–15	AN515–6–4	—	. . . SCREW, mach: slot drive; RH; steel, cad pl; No. 6–32; 1/4 in lg (Att. Pt.)	1	
–16	AN936B6B	—	. . . WASHER, lock: bronze, tinned; round, No. 6; shakeproof-type, tw ext teeth (Att. Pt.)	1	
✦ –18	160–305	C623	. . . CAPACITOR, variable (Johnson EF)	1	
–19	CT1C025	C624	. . . CAPACITOR, variable	1	
–20	CT1C025	C628	. . . CAPACITOR, variable	1	
–21	AN515–4–3	—	. . . SCREW, mach: slot drive; RH; steel, cad pl; No. 4–40; 3/16 in lg (Att. Pt. for items 19 and 20)	4	
–22	AN936B4B	—	. . . WASHER, lock: bronze, tinned; round, No. 4; shakeproof-type, tw ext teeth (Att. Pt. for items 19 and 20)	4	
–23	UG290/U	J607	. . . CONNECTOR, receptacle	1	
–24	AN520–3–3	—	. . . SCREW, mach: slot drive; RH; steel, cad pl; No. 3–56; 3/16 in lg (Att. Pt.)	4	
–25	AN936A3	—	. . . WASHER, lock: steel, cad pl; round, No. 3; shakeproof-type, tw int teeth (Att. Pt.)	4	
–26	CC26UK101J	C627	. . . CAPACITOR, fixed	1	
–27	P7770419P133	R622	. . . RESISTOR, fixed	1	

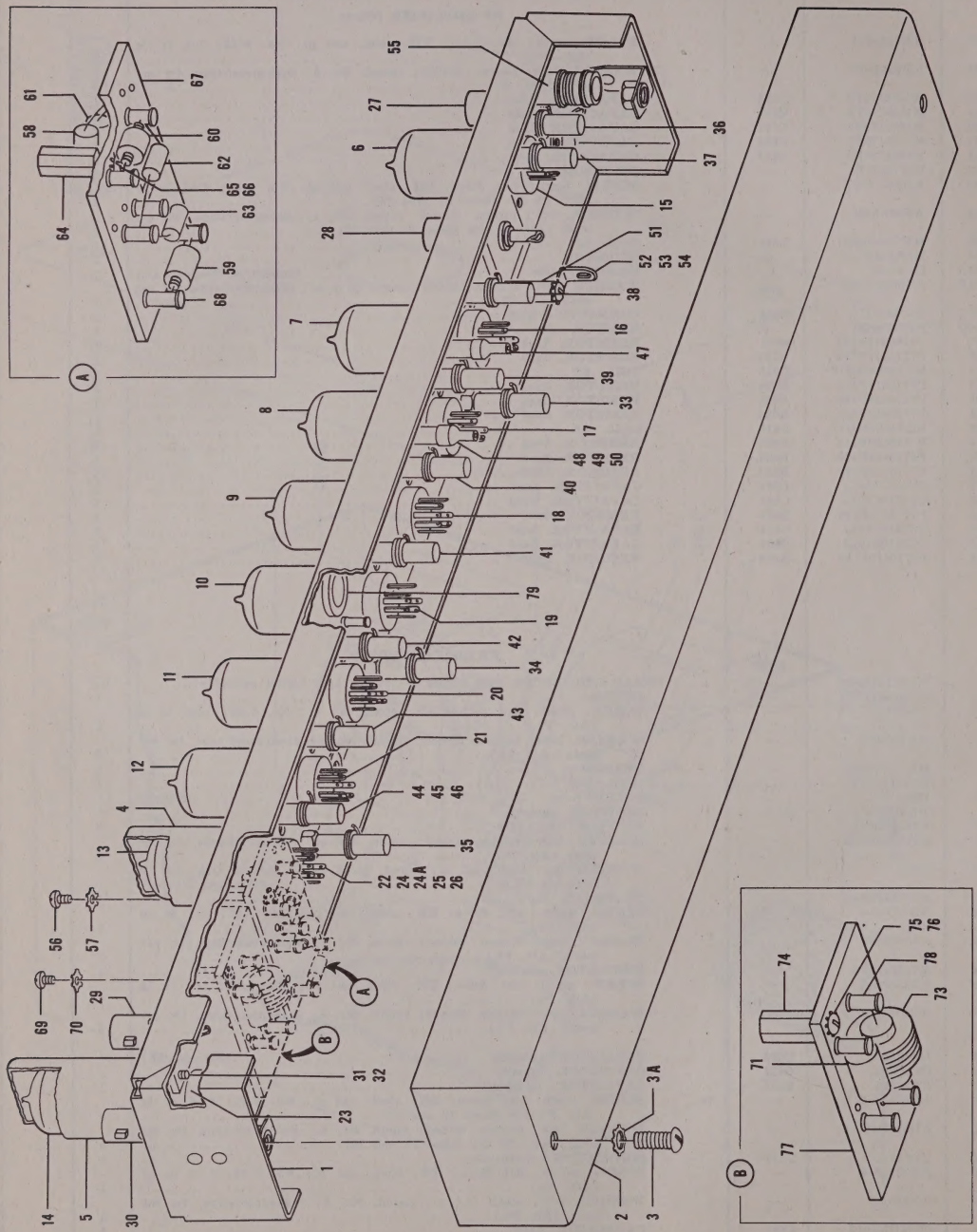

Figure 46. Radar Receiver, Bottom-Front View (Sheet 1 of 2 sheets, Index Nos. 1 thru 79)

FIG. & INDEX NO.	PART NUMBER	REF SYMBOL	NOMENCLATURE 1 2 3 4 5 6 7	UNITS PER ASSY	APPLI-CATION
			PHASE CONVERTER (Cont)		
45–28	CC26UK101J	C625	. . . CAPACITOR, fixed	1	
–29	P7770419P139	R618	. . . RESISTOR, fixed	1	
–30	P7770419P121	R621	. . . RESISTOR, fixed	1	
–31	P7770419P139	R620	. . . RESISTOR, fixed	1	
–32	ML7400971G1	T601	. . . COIL, RF	1	
			RADAR RECEIVER		
46–	ML7666800G1	—	. . RADAR RECEIVER (See Figure 40–134 for next higher assembly)	Ref	
–1	ML7772528G1	—	. . . CHASSIS	1	
–2	ML7772532G1	—	. . . COVER	1	
–3	AN515–6–7	—	. . . SCREW, mach: slot drive; RH; steel, cad pl; No. 6–32; 7/16 in lg (Att. Pt.)	2	
–3A	AN936B6B	—	. . . WASHER, lock: bronze, tinned; round, No. 6; shakeproof-type, tw ext teeth (Att. Pt.)	2	
–4	SOS3	—	. . . SHIELD, tube	8	
–5	SOS6	—	. . . SHIELD, tube	1	
–6	6AK5	V501	. . . TUBE, electron	1	
–7	6AK5	V502	. . . TUBE, electron	1	
–8	6AK5	V503	. . . TUBE, electron	1	
–9	6AK5	V504	. . . TUBE, electron	1	
–10	6AK5	V505	. . . TUBE, electron	1	
–11	6AK5	V506	. . . TUBE, electron	1	
–12	6AK5	V507	. . . TUBE, electron	1	
–13	6AK5	V508	. . . TUBE, electron	1	
–14	6J6	V509	. . . TUBE, electron	1	
–15	SO10M	XV501	. . . SOCKET, tube	1	
–16	SO10M	XV502	. . . SOCKET, tube	1	
–17	SO10M	XV503	. . . SOCKET, tube	1	
–18	SO10M	XV504	. . . SOCKET, tube	1	
–19	SO10M	XV505	. . . SOCKET, tube	1	
–20	SO10M	XV506	. . . SOCKET, tube	1	
–21	SO10M	XV507	. . . SOCKET, tube	1	
–22	SO10M	XV508	. . . SOCKET, tube	1	
–23	SO10M	XV509	. . . SOCKET, tube	1	
–24	AN515–4–3	—	. . . SCREW, mach: slot drive; RH; steel, cad pl; No. 4–40; 3/16 in lg (Att. Pt. for items 15 thru 22)	8	
–24A	AN515–4–4	—	. . . SCREW, mach: slot drive; RH; steel, cad pl; No. 4–40; 1/4 in lg (Att. Pt. for items 15 thru 23)	10	
–25	AN936B4B	—	. . . WASHER, lock: bronze, tinned; round, No. 4; shakeproof-type, tw ext teeth (Att. Pt. for items 15 thru 23)	18	
–26	1052	—	. . . NUT, anchor (Att. Pt. for items 15 thru 23) (Cinch)	9	
–27	UG290/U	J502	. . . CONNECTOR, plug	1	
–28	UG290/U	J501	. . . CONNECTOR, plug	1	
–29	UG290/U	J504	. . . CONNECTOR, plug	1	
–30	UG290/U	J503	. . . CONNECTOR, plug	1	
–31	AN520–3–4	—	. . . SCREW, mach: slot drive; RH; steel, cad pl; No. 3–56; 1/4 in lg (Att. Pt. for items 27 thru 30)	16	
–32	AN936A3	—	. . . WASHER, lock: steel, cad pl; round, No. 3; shakeproof-type, tw int teeth (Att. Pt. for items 27 thru 30)	16	
–33	M7483176P2	C504	. . . CAPACITOR, fixed	1	
–34	M7483176P2	C523	. . . CAPACITOR, fixed	1	
–35	M7483176P2	C524	. . . CAPACITOR, fixed	1	
–36	M7483176P3	C501	. . . CAPACITOR, fixed	1	
–37	M7483176P2	C505	. . . CAPACITOR, fixed	1	
–38	M7483176P2	C506	. . . CAPACITOR, fixed	1	
–39	M7483176P2	C509	. . . CAPACITOR, fixed	1	
–40	M7483176P2	C512	. . . CAPACITOR, fixed	1	
–41	M7483176P2	C514	. . . CAPACITOR, fixed	1	
–42	M7483176P2	C516	. . . CAPACITOR, fixed	1	
–43	M7483176P2	C518	. . . CAPACITOR, fixed	1	
–44	M7483176P2	C520	. . . CAPACITOR, fixed	1	
–45	AN515–4–4	—	. . . . SCREW, mach: slot drive; RH; steel, cad pl; No. 4–40; 1/4 in lg (Att. Pt. for items 33 thru 44)	12	
–46	AN936B4B	—	. . . WASHER, lock: bronze, tinned; round, No. 4; shakeproof-type, tw ext teeth (Att. Pt. for items 33 thru 44)	12	
–47	K7001403P4	C508	. . . CAPACITOR, fixed	1	
–48	K7001403P5	C511	. . . CAPACITOR, fixed	1	
–49	AN340–6	—	. . . NUT, hex: steel, cad pl; No. 6–32 (Att. Pt. for items 47 and 48)	2	
–50	AN936B6B	—	. . . WASHER, lock: bronze, tinned; round, No. 6; shakeproof-type, tw ext teeth (Att. Pt. for items 47 and 48)	2	
–51	M7462416P2	—	. . . POST, spacing	6	
–52	K7878455P1	—	. . . TERMINAL, lug	27	
–53	AN515–6–4	—	. . . SCREW, mach: slot drive; RH; steel, cad pl; No. 6–32; 1/4 in lg (Att. Pt. for items 51 and 52)	12	
–54	AN936B6B	—	. . . WASHER, lock: bronze, tinned; round, No. 6; shakeproof-type, tw ext teeth (Att. Pt. for items 51 and 52)	12	
–55	ML7000380G1	L501	. . . COIL, RF	1	
	ML7000180G1	—	. . . CAPACITOR-RESISTOR-CRYSTAL-COIL SUBASSEMBLY	1	
–56	AN515–4–3	—	. . . SCREW, mach: slot drive; RH; steel, cad pl; No. 4–40; 3/16 in lg (Att. Pt.)	3	

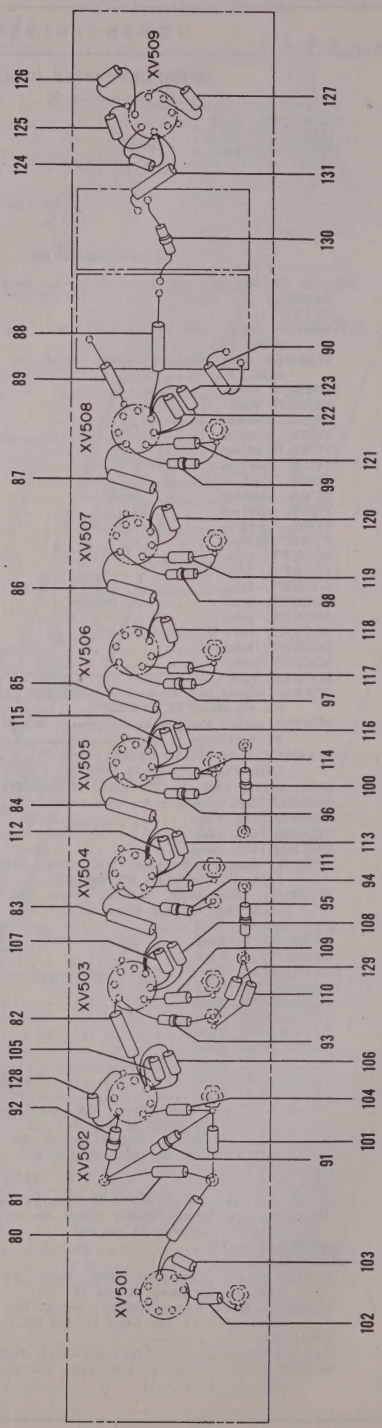

Figure 46. Radar Receiver, Bottom View (Sheet 2 of 2 sheets, Index Nos. 80 thru 131)

FIG. & INDEX NO.	PART NUMBER	REF SYMBOL	1 2 3 4 5 6 7 NOMENCLATURE	UNITS PER ASSY	APPLI-CATION
			RADAR RECEIVER (Cont)		
46–57	AN936B4B	—	. . . WASHER, lock: bronze, tinned; round, No. 4; shakeproof-type, tw ext teeth (Att. Pt.)	3	
–58	P7770419P171	R533	. . . . RESISTOR, fixed	1	
–59	IN69	CR501	. . . . CRYSTAL UNIT, rectifying	1	
–60	IN69	CR502	. . . . CRYSTAL UNIT, rectifying	1	
–61	ML7407361G1	L512	. . . . COIL, RF	1	
–62	P7770419P167	R528	. . . . RESISTOR, fixed	1	
–63	P7770419P167	R529	. . . . RESISTOR, fixed	1	
–64	M7480544P5D	—	. . . . POST, spacing	3	
–65	AN515–4–4	—	. . . . SCREW, mach: slot drive; RH; steel, cad pl; No. 4–40; 1/4 in lg (Att. Pt.)	3	
–66	AN936B4B	—	. . . . WASHER, lock: bronze, tinned; round, No. 4; shakeproof-type, tw ext teeth (Att. Pt.)	3	
	ML7000002G1	—	. . . . BOARD, terminal	1	
–67	K7000002P2	—	. . . . . PANEL	1	
–68	T100–3	—	. . . . . TERMINAL, stud (Bead Chain)	7	
	ML7000083G1	—	. . . CAPACITOR-COIL SUBASSEMBLY	1	
–69	AN515–4–3	—	. . . SCREW, mach: slot drive; RH; steel, cad pl; No. 4–40; 3/16 in lg (Att. Pt.)	2	
–70	AN936B4B	—	. . . WASHER, lock: bronze, tinned; round, No. 4; shakeproof-type, tw ext teeth (Att. Pt.)	2	
–71	CC21UJ100D	C525	. . . . CAPACITOR, fixed	1	
✦					
–73	ML7400986G1	—	. . . . COIL, RF	1	
–74	M7480544P5F	—	. . . . POST, spacing	2	
–75	AN515–4–4	—	. . . . SCREW, mach: slot drive; RH; steel, cad pl; No. 4–40; 1/4 in lg (Att. Pt.)	2	
–76	AN936B4B	—	. . . . WASHER, lock: bronze, tinned; round, No. 4; shakeproof-type, tw ext teeth (Att. Pt.)	2	
	ML7000987G1	—	. . . . BOARD, terminal	1	
–77	K7000987P2	—	. . . . . PANEL	1	
–78	T100–3	—	. . . . . TERMINAL, stud (Bead Chain)	6	
–79	M2R53P5	—	. . . GROMMET	1	
–80	CC26UK101J	C502	. . . CAPACITOR, fixed	1	
–81	CC21UJ470K	C503	. . . CAPACITOR, fixed	1	
–82	CC26UK101J	C507	. . . CAPACITOR, fixed	1	
–83	CC26UK101J	C510	. . . CAPACITOR, fixed	1	
–84	CC26UK101J	C513	. . . CAPACITOR, fixed	1	
–85	CC26UK101J	C515	. . . CAPACITOR, fixed	1	
–86	CC26UK101J	C517	. . . CAPACITOR, fixed	1	
–87	CC26UK101J	C519	. . . CAPACITOR, fixed	1	
–88	CC26UK101J	C521	. . . CAPACITOR, fixed	1	
–89	CC21UJ100D	C526	. . . CAPACITOR, fixed	1	
–90	CC21UJ100D	C527	. . . CAPACITOR, fixed	1	
–91	ML7400881G1	L502	. . . COIL, RF	1	
–92	ML7400881G2	L503	. . . COIL, RF	1	
–93	ML7400881G3	L504	. . . COIL, RF	1	
–94	ML7400881G8	L506	. . . COIL, RF	1	
–95	ML7400881G7	L507	. . . COIL, RF	1	
–96	ML7400881G3	L508	. . . COIL, RF	1	
–97	ML7400881G4	L509	. . . COIL, RF	1	
–98	ML7400881G5	L510	. . . COIL, RF	1	
–99	ML7400881G5	L511	. . . COIL, RF	1	
–100	ML7400881G7	L514	. . . COIL, RF	1	
–101	P7770419P139	R501	. . . RESISTOR, fixed	1	
–102	P7770419P131	R503	. . . RESISTOR, fixed	1	
–103	P7770419P147	R504	. . . RESISTOR, fixed	1	
–104	P7770419P131	R505	. . . RESISTOR, fixed	1	
–105	P7770419P179	R506	. . . RESISTOR, fixed	1	
–106	P7770419P179	R507	. . . RESISTOR, fixed	1	
–107	P7770419P179	R508	. . . RESISTOR, fixed	1	
–108	P7770419P179	R509	. . . RESISTOR, fixed	1	
–109	P7770419P131	R510	. . . RESISTOR, fixed	1	
–110	P7770419P159	R511	. . . RESISTOR, fixed	1	
–111	P7770419P131	R512	. . . RESISTOR, fixed	1	
–112	P7770419P179	R513	. . . RESISTOR, fixed	1	
–113	P7770419P179	R514	. . . RESISTOR, fixed	1	
–114	P7770419P131	R515	. . . RESISTOR, fixed	1	
–115	P7770419P179	R516	. . . RESISTOR, fixed	1	
–116	P7770419P179	R517	. . . RESISTOR, fixed	1	
–117	P7770419P131	R518	. . . RESISTOR, fixed	1	
–118	P7770419P167	R519	. . . RESISTOR, fixed	1	
–119	P7770419P143	R520	. . . RESISTOR, fixed	1	
–120	P7770419P159	R521	. . . RESISTOR, fixed	1	
–121	P7770419P131	R522	. . . RESISTOR, fixed	1	
–122	P7770419P179	R523	. . . RESISTOR, fixed	1	
–123	P7770419P163	R524	. . . RESISTOR, fixed	1	
–124	P7770419P127	R525	. . . RESISTOR, fixed	1	
–125	P7770419P231	R526	. . . RESISTOR, fixed	1	
–126	P7770419P159	R527	. . . RESISTOR, fixed	1	
–127	P7770419P127	R530	. . . RESISTOR, fixed	1	
–128	P7770419P171	R531	. . . RESISTOR, fixed	1	
–129	P7770419P159	R532	. . . RESISTOR, fixed	1	
–130	ML7126181G2	L513	. . . COIL, RF	1	
–131	CC21UK050C	C522	. . . CAPACITOR, fixed	1	

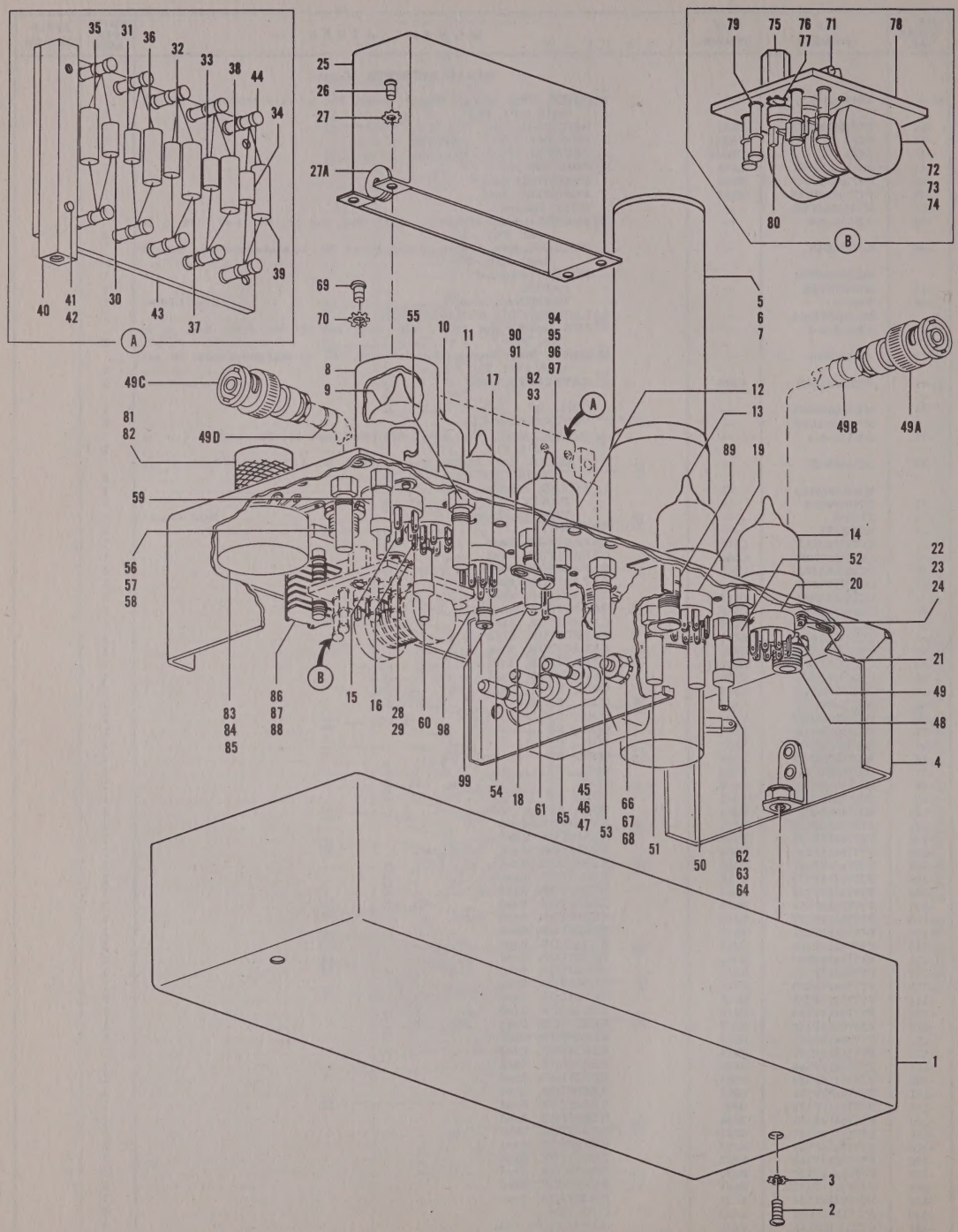

Figure 47. RF Oscillator, Bottom-Front View (Sheet 1 of 2 sheets, Index Nos. 1 thru 99)

FIG. & INDEX NO.	PART NUMBER	REF SYMBOL	1 2 3 4 5 6 7 NOMENCLATURE	UNITS PER ASSY	APPLI-CATION
			RF OSCILLATOR		
47–	ML7666442G1	—	RF OSCILLATOR (See Figure 40–137 for next higher assembly)	Ref	
–1	ML7700302G1	—	COVER	1	
–2	AN515–6–7	—	SCREW, machine: slot drive; RH; steel, cad pl; No. 6–32; 7/16 in lg (Att. Pt.)	2	
–3	AN936B6B	—	WASHER, lock: bronze, tinned; round, No. 6; shakeproof-type, tw ext teeth (Att. Pt.)	2	
–4	ML7666445G1	—	CHASSIS	1	
–5	ML7400837G1	Z601	CRYSTAL UNIT SUBASSEMBLY, quartz (See Figure 48 for breakdown)	1	
–6	AN515–6–3	—	SCREW, mach: slot drive; RH; steel, cad pl; No. 6–32; 3/16 in lg (Att. Pt.)	3	
–7	AN936B6B	—	WASHER, lock: bronze, tinned; round, No. 6; shakeproof-type, tw ext teeth (Att. Pt.)	8	
–8	SOS3	—	SHIELD, tube	6	
–9	6AK5	V602	TUBE, electron	1	
–10	6AK5	V601	TUBE, electron	1	
–11	6AK5	V603	TUBE, electron	1	
–12	6AS6	V604	TUBE, electron	1	
–13	6AS6	V605	TUBE, electron	1	
–14	6AK5	V606	TUBE, electron	1	
–15	SO10M	XV602	SOCKET, tube	1	
–16	SO10M	XV601	SOCKET, tube	1	
–17	SO10M	XV603	SOCKET, tube	1	
–18	SO10M	XV604	SOCKET, tube	1	
–19	SO10M	XV605	SOCKET, tube	1	
–20	SO10M	XV606	SOCKET, tube	1	
–21	K7878455P1	—	TERMINAL, lug	12	
–22	AN515–4–3	—	SCREW, mach: slot drive; RH; steel, cad pl; No. 4–40; 3/16 in lg (Att. Pt. for items 15 thru 21)	12	
–23	AN936B4B	—	WASHER, lock: bronze, tinned; round, No. 4; shakeproof-type, tw ext teeth (Att. Pt. for items 15 thru 21)	12	
–24	1028	—	NUT, anchor (Att. Pt. for items 15 thru 21) (Cinch)	6	
–25	ML7400876G1	—	COVER	1	
–26	AN515–4–4	—	SCREW, mach: slot drive; RH; steel, cad pl; No. 4–40; 1/4 in lg (Att. Pt.)	4	
–27	AN936B4B	—	WASHER, lock: bronze, tinned; round, No. 4; shakeproof-type, tw ext teeth (Att. Pt.)	4	
–27A	M2R53P21	—	GROMMET	1	
	ML7400877G1	—	CAPACITOR-COIL SUBASSEMBLY	1	
–28	AN515–6–4	—	SCREW, machine; slot drive; RH; steel, cad pl; No. 6–32; 1/4 in lg (Att. Pt.)	2	
–29	AN936B6B	—	WASHER, lock: bronze, tinned; round, No. 6; shakeproof-type, tw ext teeth (Att. Pt.)	2	
–30	ML7400881G9	L614	COIL, RF	1	
–31	ML7400881G9	L621	COIL, RF	1	
–32	ML7400881G9	L622	COIL, RF	1	
–33	ML7400881G9	L620	COIL, RF	1	
–34	ML7400881G9	L609	COIL, RF	1	
–35	CC21UJ150J	C605	CAPACITOR, fixed	1	
–36	CC21UJ150J	C630	CAPACITOR, fixed	1	
–37	CC21UJ150J	C640	CAPACITOR, fixed	1	
–38	CC21UJ150J	C629	CAPACITOR, fixed	1	
–39	CC21UJ150J	C602	CAPACITOR, fixed	1	
–40	K7000075P1	—	POST, supporting	2	
–41	AN515–6–6	—	SCREW, mach: slot drive; RH; steel, cad pl; No. 6–32; 3/8 in lg (Att. Pt.)	4	
–42	AN936B6B	—	WASHER, lock: bronze, tinned; round, No. 6; shakeproof-type, tw ext teeth (Att. Pt.)	4	
	ML7400874G1	—	BOARD, terminal	1	
–43	ML7400874P2	—	PANEL	1	
–44	T100–3	—	TERMINAL, stud (Bead Chain)	10	
–45	UG290/U	J601	CONNECTOR, receptacle	1	
–46	AN520–3–4	—	SCREW, mach: slot drive; RH; steel, cad pl; No. 3–56; 1/4 in lg (Att. Pt.)	4	
–47	AN936A3	—	WASHER, lock: steel, cad pl; round, No. 3; shakeproof-type, tw int teeth (Att. Pt.)	4	
–48	D102B	—	HANGER, cable (Industrial Prod Co)	2	
–49	AN936B516B	—	WASHER, lock: bronze, tinned; round, 5/16 in; shakeproof-type, tw ext teeth (Att. Pt.)	2	
–49A	UG260/U	P502	CONNECTOR, plug	1	
–49B	NP140046H	—	MARKER, cable	1	
–49C	UG260/U	P607	CONNECTOR, plug	1	
–49D	NP14006J	—	MARKER, cable	1	
–50	M7483176P2	C606	CAPACITOR, fixed	1	
–51	M7483176P2	C603	CAPACITOR, fixed	1	
–52	M7483176P2	C608	CAPACITOR, fixed	1	
–53	M7483176P2	C611	CAPACITOR, fixed	1	
–54	M7483176P2	C616	CAPACITOR, fixed	1	
–55	M7483176P2	C620	CAPACITOR, fixed	1	
–56	M7483176P2	C621	CAPACITOR, fixed	1	
–57	AN515–4–4	—	SCREW, mach: slot drive; RH; steel, cad pl; No. 4–40; 1/4 in lg (Att. Pt. for items 50 thru 56)	7	
–58	AN936B4B	—	WASHER, lock: bronze, tinned; round, No. 4; shakeproof-type, tw ext teeth (Att. Pt. for items 50 thru 56)	7	
–59	K7001403P1	C617	CAPACITOR, fixed	1	

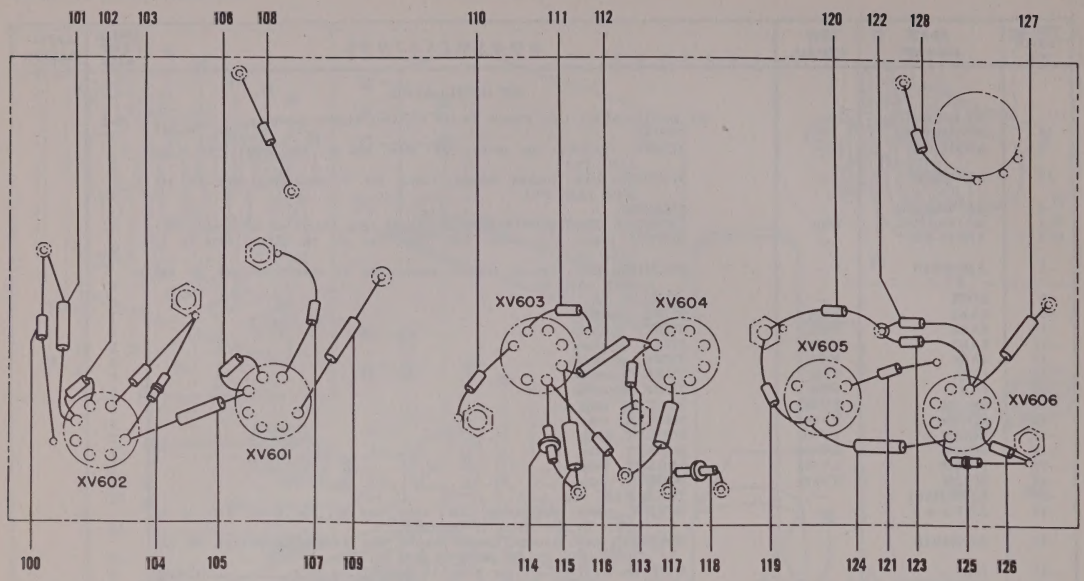

Figure 47. RF Oscillator, Bottom View (Sheet 2 of 2 sheets, Index Nos. 100 thru 128)

FIG. & INDEX NO.	PART NUMBER	REF SYMBOL	1 2 3 4 5 6 7 NOMENCLATURE	UNITS PER ASSY	APPLI-CATION
			RF OSCILLATOR (Cont)		
47-60	K7001403P1	C618	. . . CAPACITOR, fixed	1	
-61	K7001403P1	C613	. . . CAPACITOR, fixed	1	
-62	K7001403P1	C647	. . . CAPACITOR, fixed	1	
-63	AN340-6	—	. . . NUT, hex: steel, cad pl; No. 6-32 (Att. Pt. for items 59 thru 62)	4	
-64	AN936B6B	—	. . . WASHER, lock: bronze, tinned; round, No. 6; shakeproof-type, tw ext teeth (Att. Pt. for items 59 thru 62)	4	
-65	CP55B1FF503K	C610	. . . CAPACITOR, fixed	1	
-66	AN515-8-4	—	. . . SCREW, mach: slot drive; RH; steel, cad pl; No. 8-32; 1/4 in lg (Att. Pt.)	2	
-67	AN936B8B	—	. . . WASHER, lock: bronze, tinned; round, No. 8; shakeproof-type, tw ext teeth (Att. Pt.)	2	
-68	AN340-8	—	. . . NUT, hex: steel, cad pl; No. 8-32 (Att. Pt.)	2	
	ML7000340G1	—	. . . CAPACITOR-TRANSFORMER SUBASSEMBLY	1	
-69	AN515-4-4	—	. . . SCREW, mach: slot drive; RH; steel, cad pl; No. 4-40; 1/4 in lg (Att. Pt.)	3	
-70	AN936B4B	—	. . . WASHER, lock: bronze, tinned; round, No. 4; shakeproof-type, tw ext teeth (Att. Pt.)	3	
-71	CC26UK101J	C615	. . . . CAPACITOR, fixed	1	
-72	ML7000339G1	T604	. . . . COIL, RF	1	
-73	AN515-4-5	—	. . . . SCREW, mach: slot drive; RH; steel, cad pl; No. 4-40; 5/16 in lg (Att. Pt.)	2	
-74	AN936B4B	—	. . . . WASHER, lock: bronze, tinned; round, No. 4; shakeproof-type, tw ext teeth (Att. Pt.)	2	
-75	M7480544P5E	—	. . . . POST, spacing	3	
-76	AN515-4-4	—	. . . . SCREW, mach: slot drive; RH; steel, cad pl; No. 4-40; 1/4 in lg (Att. Pt.)	3	
-77	AN936B4B	—	. . . . WASHER, lock: bronze, tinned; round, No. 4; shakeproof-type, tw ext teeth (Att. Pt.)	3	
	ML7000336G1	—	. . . . BOARD, terminal	1	
-78	K7000336P2	—	. . . . . PANEL	1	
-79	T100-3	—	. . . . . TERMINAL, stud (Bead Chain)	4	
-80	1969	—	. . . . . TERMINAL, stud (Cambridge Therm)	2	
-81	M7481469P1	—	. . . NUT, lock	1	
-82	10061	—	. . . COLLET (Millen)	1	
-83	P7770835P22	R610	. . . RESISTOR, variable	1	
-84	K7868592P1	—	. . . NUT, hex	1	
-85	AN936A616B	—	. . . WASHER, lock: bronze, tinned; round, 3/8 in; shakeproof-type, tw int teeth (Att. Pt.)	2	
-86	CT1C040	C614	. . . CAPACITOR, variable	1	
-87	AN515-4-3	—	. . . SCREW, mach: slot drive; RH; steel, cad pl; No. 4-40; 3/16 in lg (Att. Pt.)	2	

FIG. & INDEX NO.	PART NUMBER	REF SYMBOL	NOMENCLATURE 1 2 3 4 5 6 7	UNITS PER ASSY	APPLI-CATION
			RF OSCILLATOR (Cont)		
47–88	AN936B4B	—	. . . WASHER, lock: bronze, tinned; round, No. 4; shakeproof-type, tw ext teeth (Att. Pt.)	2	
–89	ML7000380G2	L601	. . . COIL, RF	1	
–90	K7878455P1	—	. . . TERMINAL, lug	11	
–91	K7872445P1	—	. . . WASHER, flat	10	
–92	AN515–6–4	—	. . . SCREW, mach: slot drive; RH; steel, cad pl; No. 6–32; 1/4 in lg (Att. Pt. for items 90 and 91)	10	
–93	AN936B6B	—	. . . WASHER, lock: bronze, tinned; round, No. 6; shakeproof-type, tw ext teeth (Att. Pt. for items 90 and 91)	10	
–94	M7462416P9	—	. . . INSULATOR, standoff	10	
–95	K7872445P1	—	. . . WASHER, flat	10	
–96	AN515–6–4	—	. . . SCREW, mach: slot drive; RH; steel, cad pl; No. 6–32; 1/4 in lg (Att. Pt. for items 94 and 95)	10	
–97	AN936B6B	—	. . . WASHER, lock: bronze, tinned; round, No. 6; shakeproof-type, tw ext teeth (Att. Pt. for items 94 and 95)	10	
–98	M2R53P4	—	. . . GROMMET	2	
–99	T100–3	—	. . . TERMINAL, stud (Bead Chain)	2	
–100	P7770419P183	R646	. . . RESISTOR, fixed	1	
–101	CC26UK101J	C607	. . . CAPACITOR, fixed	1	
–102	P7770419P163	R603	. . . RESISTOR, fixed	1	
–103	P7770419P159	R604	. . . RESISTOR, fixed	1	
–104	ML7400881G13	L602	. . . COIL, RF	1	
–105	CC26UK101J	C604	. . . CAPACITOR, fixed	1	
–106	P7770419P159	R601	. . . RESISTOR, fixed	1	
–107	P7770419P135	R602	. . . RESISTOR, fixed	1	
–108	P7770419P151	R605	. . . RESISTOR, fixed	1	
–109	CC26UK101J	C601	. . . CAPACITOR, fixed	1	
–110	P7770419P183	R606	. . . RESISTOR, fixed	1	
–111	P7770419P131	R609	. . . RESISTOR, fixed	1	
–112	CC26UK680J	C612	. . . CAPACITOR, fixed	1	
–113	P7770419P183	R611	. . . RESISTOR, fixed	1	
–114	ML7126181G3	L604	. . . COIL, RF	1	
–115	RC30BF682J	R608	. . . RESISTOR, fixed	1	
–116	P7770419P151	R607	. . . RESISTOR, fixed	1	
–117	RC30BF222M	R612	. . . RESISTOR, fixed	1	
–118	ML7126181G3	L605	. . . COIL, RF	1	
–119	P7770419P147	R643	. . . RESISTOR, fixed	1	
–120	P7770419P151	R614	. . . RESISTOR, fixed	1	
–121	P7770419P131	R613	. . . RESISTOR, fixed	1	
–122	P7770419P183	R617	. . . RESISTOR, fixed	1	
–123	P7770419P183	R616	. . . RESISTOR, fixed	1	
–124	CC26UK680J	C619	. . . CAPACITOR, fixed	1	
–125	ML7400881G11	L608	. . . COIL, RF	1	
126	P7770419P135	R615	. . . RESISTOR, fixed	1	
–127	CC26UK680J	C622	. . . CAPACITOR, fixed	1	
–128	P7770419P211	R642	. . . RESISTOR, fixed	1	

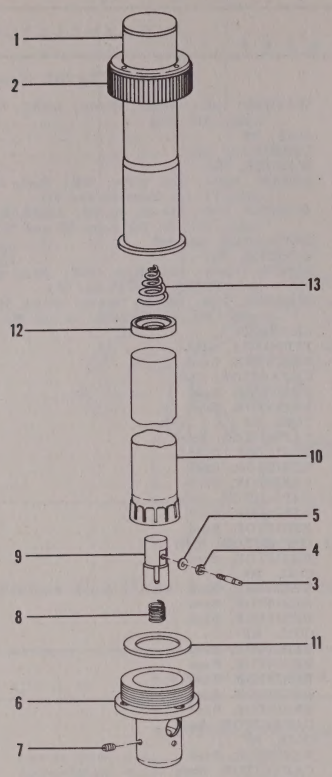

Figure 48. Quartz Crystal Unit Subassembly

FIG. & INDEX NO.	PART NUMBER	REF SYMBOL	NOMENCLATURE 1 2 3 4 5 6 7	UNITS PER ASSY	APPLI-CATION
			QUARTZ CRYSTAL UNIT SUBASSEMBLY		
48–	ML7400837G1	Z601	. . . QUARTZ CRYSTAL UNIT SUBASSEMBLY (See Figure 47–5 for next higher assembly)	Ref	
–1	ML7000033G1	—	. . . . HOUSING	1	
–2	K7128387P1	—	. . . . NUT, knurled	1	
–3	K7000021P1	—	. . . . TERMINAL, stud	1	
–4	AN340–4	—	. . . . NUT, hex: steel, cad pl; No. 4–40 (Att. Pt.)	1	
–5	AN936A6B	—	. . . . WASHER, lock: bronze, tinned; round, No. 6; shakeproof-type, tw int teeth (Att. Pt.)	1	
–6	M7400836P1	—	. . . . CAP	1	
–7	Coml	—	. . . . SCREW, set: Bristo six-spline drive; headless; steel, cad pl; No. 4–40; 1/4 in lg; cup point (Att. Pt.) (Bristolco)	3	
–8	K7000037P1	—	. . . . SPRING	1	
–9	ML7000047G1	—	. . . . ELECTRODE SUBASSEMBLY	1	
–10	ML7000045G1	—	. . . . CRYSTAL UNIT, quartz	1	
–11	K7128388P1	—	. . . . WASHER, flat	1	
–12	K7000020P1	—	. . . . WASHER, cup	1	
–13	K7000038P1	—	. . . . SPRING	1	

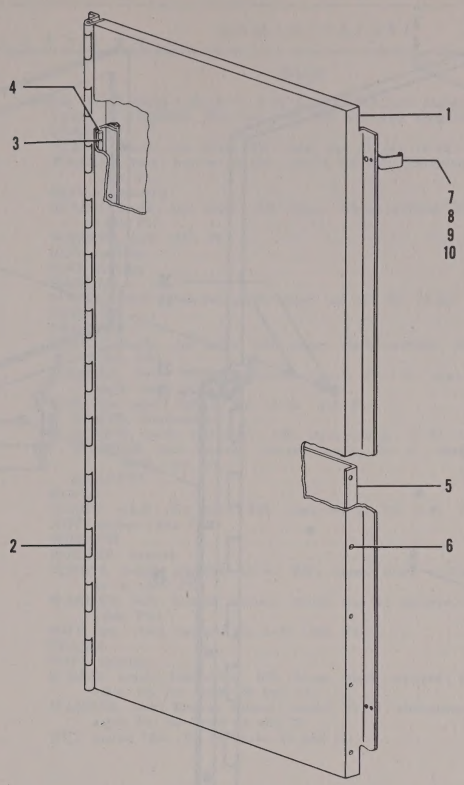

Figure 49. Door

FIG. & INDEX NO.	PART NUMBER	REF SYMBOL	NOMENCLATURE 1 2 3 4 5 6 7	UNITS PER ASSY	APPLI-CATION
			DOOR		
49–	ML7772591G1	—	. DOOR (See Figures 2–41, 3–42, 4–44, 5 and 6 for next higher assembly)	Ref	
–1	No Number	—	. . DOOR (P7772591P2, P3, P7, P8, P11 and P15, assembled)	1	
–2	P7772589P4	—	. . HINGE	1	
–3	AN515–8–7	—	. . SCREW, mach: slot drive; RH; steel, cad pl; No. 8–32; 7/16 in lg (Att. Pt.)	7	
–4	M7403506P2	—	. . NUT, anchor (Att. Pt.)	1	
–5	ML7700935G1	—	. . BRACKET	1	
–6	AN505–4–3	—	. . SCREW, mach: slot drive; FH; steel, cad pl; No. 4–40; 3/16 in lg (Att. Pt.)	14	
–7	K7007739P1	—	. . BRACKET	1	
–8	AN515–4–5	—	. . SCREW, mach: slot drive; FH; steel, cad pl; No. 4–40; 5/16 in lg (Att. Pt.)	4	
–9	AN936B4B	—	. . WASHER, lock: bronze, tinned; round, No. 4; shakeproof-type; tw ext teeth (Att. Pt.)	4	
–10	AN340–4	—	. . NUT, hex: steel, cad pl; No. 4–40 (Att. Pt.)	4	

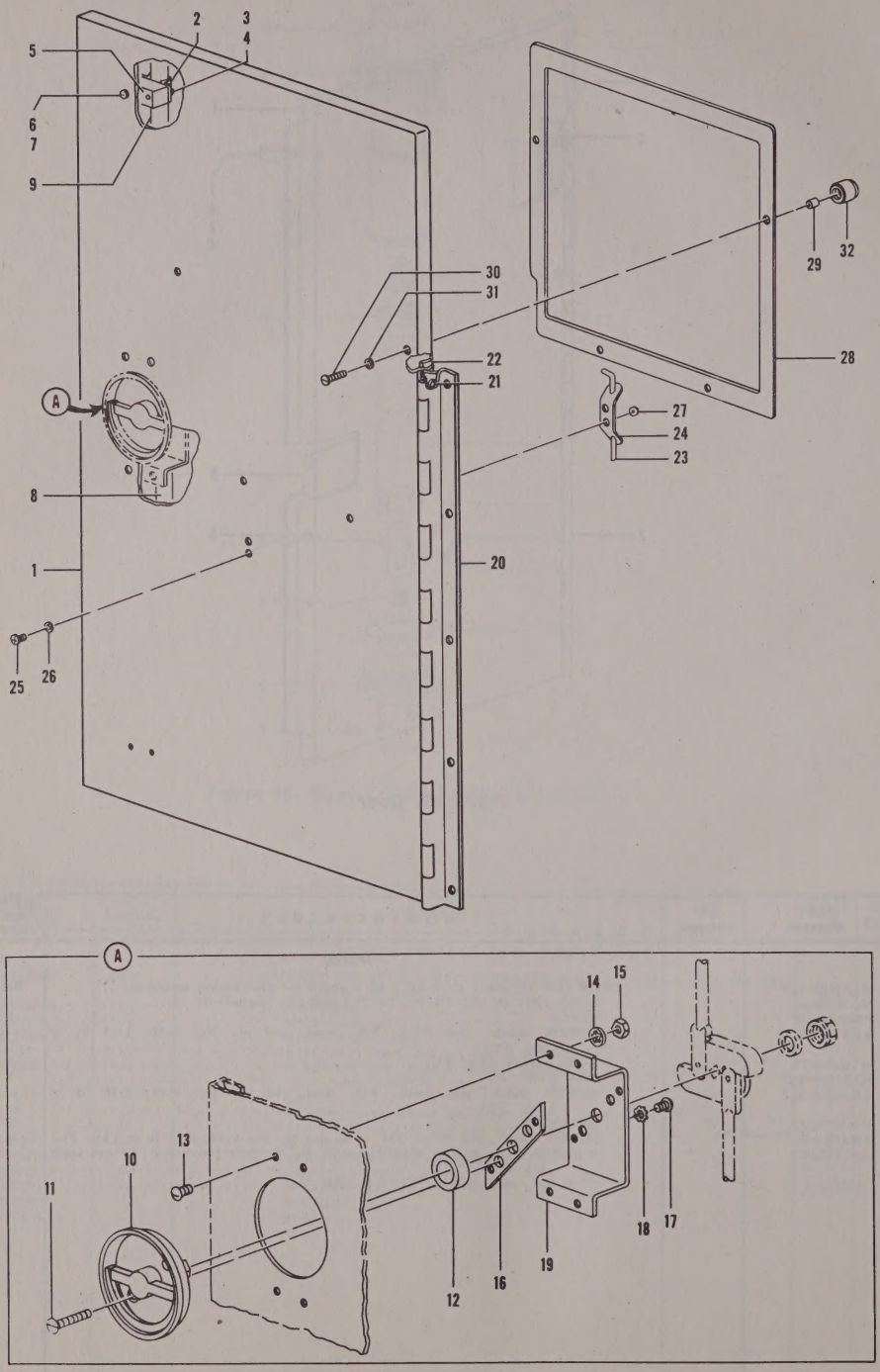

Figure 50. Door

FIG. & INDEX NO.	PART NUMBER	REF SYMBOL	NOMENCLATURE 1 2 3 4 5 6 7	UNITS PER ASSY	APPLI-CATION
			DOOR		
50–	ML7772590G1	—	. DOOR (See Figures 2–42, 3–43, 4–45, 5 and 6 for next higher assembly)	Ref	
–1	No Number	—	. . DOOR (P7772590P2, P12 thru P15, P25 and P32, assembled)	1	
–2	K7001515P1	—	. . BRACKET	2	
–3	AN520–10–6	—	. . SCREW, mach: slot drive; RH; steel, cad pl; No. 10–32; 3/8 in lg (Att. Pt.)	4	
–4	AN936B10B	—	. . WASHER, lock: bronze, tinned; round, No. 10; shakeproof-type, tw ext teeth (Att. Pt.)	4	
–5	K7001167P1	—	. . BLOCK, spacing	2	
–6	AN520B10–6	—	. . SCREW, mach: slot drive; RH; brass, black oxidized; No. 10–32; 3/8 in lg (Att. Pt.)	4	
–7	1910	—	. . WASHER, lock (Att. Pt.) (Shakeproof)	4	
–8	K7001516P2	—	. . ROD, locking	1	
–9	K7001516P1	—	. . ROD, locking	1	
–10	M7483095P1	—	. . HANDLE	1	
–11	AN510–10–8	—	. . SCREW, mach: slot drive; FH; steel, cad pl; No. 10–32; 1/2 in lg (Att. Pt.)	2	
–12	K7004714P1	—	. . BUSHING	1	
	ML7005030G1	—	. . BRACKET	1	
–13	AN520B10–6	—	. . SCREW, mach: slot drive; RH; brass, black oxidized; No. 10–32; 3/8 in lg (Att. Pt.)	4	
–14	AN936B10B	—	. . WASHER, lock: bronze, tinned; round, No. 10; shakeproof-type, tw ext teeth (Att. Pt.)	4	
–15	AN345–10	—	. . NUT, hex: steel, cad pl; No. 10–32 (Att. Pt.)	4	
–16	K7005029P1	—	. . . PLATE, reinforcing	1	
–17	AN520–10–6	—	. . . SCREW, mach: slot drive; RH; steel, cad pl; 10–32; 5/16 in lg (Att. Pt.)	2	
–18	AN936B10B	—	. . . WASHER, lock: bronze, tinned; round, No. 10; shakeproof-type, tw ext teeth (Att. Pt.)	2	
–19	K7005030P2	—	. . . BRACKET	1	
–20	P7772589P1	—	. . HINGE	1	
–21	AN515–8–7	—	. . SCREW, mach: slot drive; RH; steel, cad pl; No. 8–32; 7/16 in lg (Att. Pt.)	5	
–22	M7403506P4	—	. . NUT, anchor (Att. Pt.)	1	
–23	K7117691P1	—	. . WRENCH	1	
–24	K7126174P3	—	. . HOLDER, wrench	1	
–25	AN515B4R4	—	. . SCREW, mach: Phillips drive; RH; brass, black oxidized; No. 4–40; 1/4 in lg (Att. Pt.)	2	
–26	AN936A4B	—	. . WASHER, lock: bronze, tinned; round, No. 4; shakeproof-type, tw int teeth (Att. Pt.)	2	
–27	AN340–4	—	. . NUT, hex: steel, cad pl; No. 4–40 (Att. Pt.)	2	
–28	M7405290P1	—	. . FRAME	1	
–29	K7005798P1	—	. . POST, spacing	4	
–30	AN515B8–12	—	. . SCREW, mach: slot drive; RH; brass, black oxidized; No. 8–32; 3/4 in lg (Att. Pt. for items 28 and 29)	4	
–31	AN936A8B	—	. . WASHER, lock: bronze, tinned; round, No. 8; shakeproof-type, tw int teeth (Att. Pt. for items 28 and 29)	4	
–32	K7005799P1	—	. . NUT, round (Att. Pt. for items 28 and 29)	4	

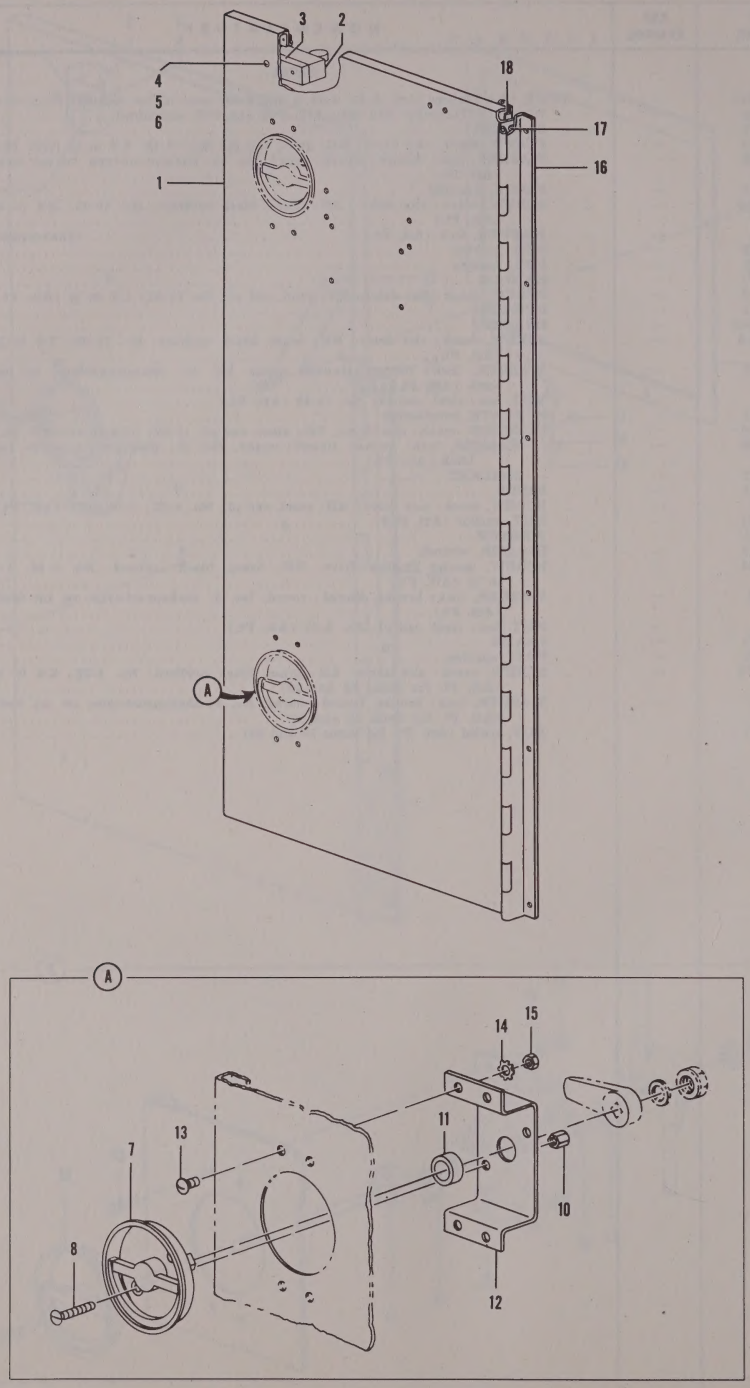

Figure 51. Door

FIG. & INDEX NO.	PART NUMBER	REF SYMBOL	NOMENCLATURE 1 2 3 4 5 6 7	UNITS PER ASSY	APPLI-CATION
			DOOR		
51–	ML7772598G1	—	. DOOR (See Figures 2–43, 3–44, 4–46, 5 and 6 for next higher assembly)	Ref	
–1	No Number	—	. . DOOR (P7772598P2, P8 thru P11, P22 and P24, assembled)	1	
–2	ML7460330G5	S2701B	. . SWITCH, interlock	1	
–3	K7001513P1	—	. . PLATE, spacer	1	
–4	AN515B6–14	—	. . SCREW, mach: slot drive; RH; brass, black oxidized; No. 6–32; 7/8 in lg (Att. Pt. for items 2 and 3)	2	
–5	1906	—	. . WASHER, lock (Att. Pt. for items 2 and 3) (Shakeproof)	2	
–6	AN340–6	—	. . NUT, hex: steel, cad pl; No. 6–32 (Att. Pt. for items 2 and 3)	2	
–7	M7483488P1	—	. . HANDLE	2	
–8	AN510–10–12	—	. . SCREW, mach: slot drive; FH; steel, cad pl; No. 10–32; 1-3/4 in lg (Att. Pt.)	4	
✦					
–10	M7480544P20E	—	. . NUT, hex (Att. Pt.)	4	
–11	K7004714P2	—	. . BUSHING	2	
–12	K7001165P1	—	. . BRACKET	2	
–13	AN520B10–6	—	. . SCREW, mach: slot drive; RH; brass, black oxidized; No. 10–32; 3/8 in lg (Att. Pt.)	8	
–14	AN936B10B	—	. . WASHER, lock: bronze, tinned; round, No. 10; shakeproof-type, tw ext teeth (Att. Pt.)	8	
–15	AN345–10	—	. . NUT, hex: steel, cad pl; No. 10–32 (Att. Pt.)	8	
–16	P7772589P3	—	. . HINGE	1	
–17	AN515–8–7	—	. . SCREW, mach: slot drive; RH; steel, cad pl; No. 8–32; 7/16 in lg (Att. Pt.)	6	
–18	M7403506P1	—	. . NUT, anchor (Att. Pt.)	1	

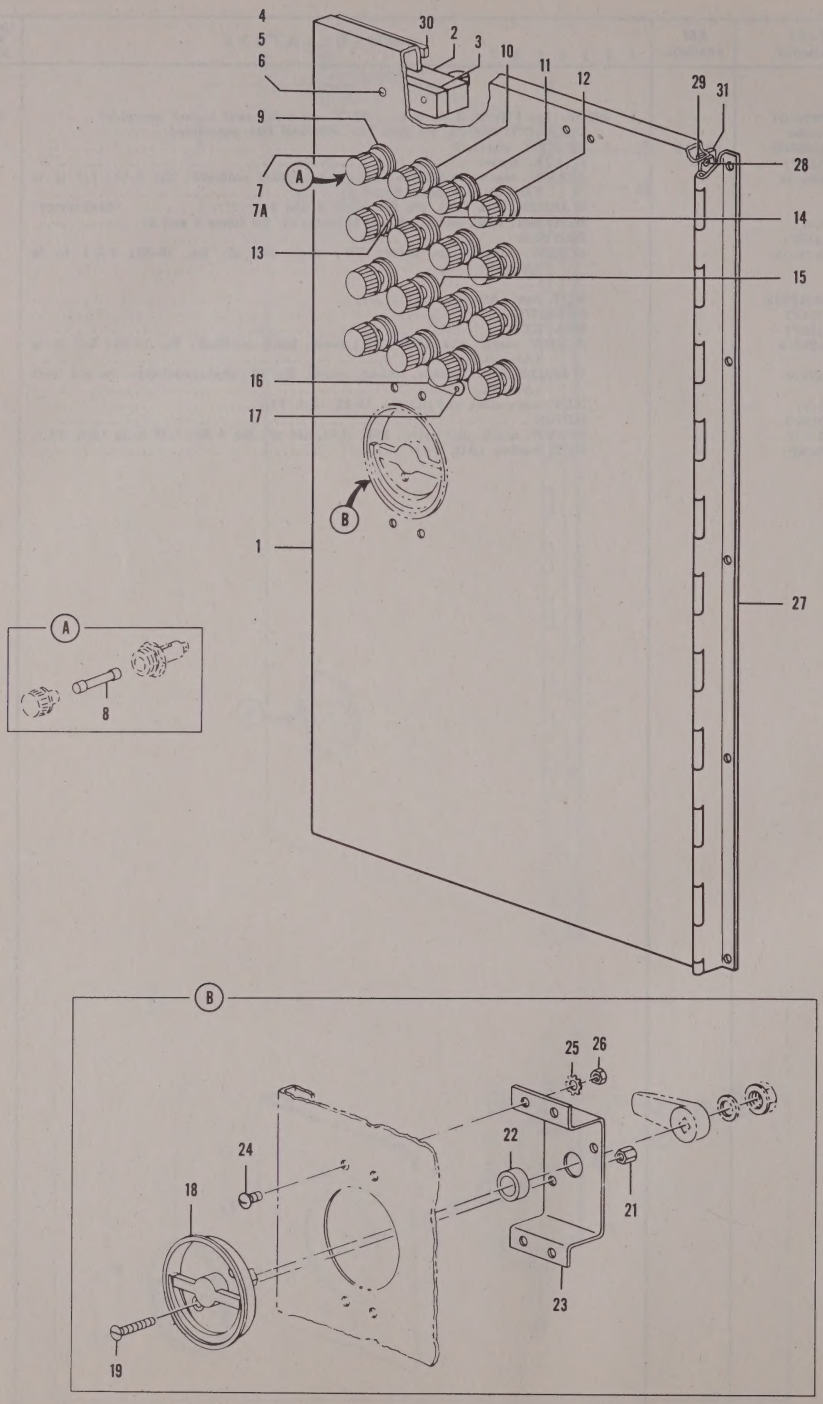

Figure 52. Door

FIG. & INDEX NO.	PART NUMBER	REF SYMBOL	NOMENCLATURE 1 2 3 4 5 6 7	UNITS PER ASSY	APPLI-CATION
			DOOR		
52–	ML7772592G1	—	. DOOR (See Figures 2–44, 3–45, 4–47, 5 and 6 for next higher assembly)	Ref	
–1	ML7772588G1	—	. . DOOR	1	
–2	ML7460330G5	S2711B	. . SWITCH, interlock	1	
–3	K7001513P1	—	. . PLATE, spacer	1	
–4	AN515B6–14	—	. . SCREW, mach: slot drive; RH; brass, black oxidized; No. 6–32; 7/8 in lg (Att. Pt. for items 2 and 3)	2	
–5	AN936B6B	—	. . WASHER, lock: bronze, tinned; round, No. 6; shakeproof-type, tw ext teeth (Att. Pt. for item 2 and 3)	2	
–6	AN340–6	—	. . NUT, hex: steel, cad pl; No. 6–32 (Att. Pt. for items 2 and 3)	2	
–7	HCM–R	—	. . HOLDER, fuse (Buss)	16	
–7A	1228–2	—	. . WASHER, lock (Att. Pt.) (Shakeproof)	16	
–8	ABS2	—	. . FUSE, cartridge (Buss)	1	
–9	K7126649P6	—	. . DISK, indicator	1	
	ABS5	—	. . FUSE, cartridge (Ref item 8) (Buss)	1	
–10	K7126649P7	—	. . DISK, indicator	1	
	ABS10	—	. . FUSE, cartridge (Ref item 8) (Buss)	1	
–11	K7126649P8	—	. . DISK, indicator	1	
	AGS–1/2	—	. . FUSE, cartridge (Ref item 8) (Buss)	1	
–12	K7126649P3	—	. . DISK, indicator	1	
	ABS1	—	. . FUSE, cartridge (Ref item 8) (Buss)	1	
–13	K7126649P5	—	. . DISK, indicator	1	
	MCB–1/16	—	. . FUSE, cartridge (Ref item 8) (Buss)	4	
–14	K7126649P1	—	. . DISK, indicator	4	
	AGS–1/4	—	. . FUSE, cartridge (Ref item 8) (Buss)	7	
–15	K7126649P2	—	. . DISK, indicator	7	
–16	NP137461A	—	. . PLATE, identification	1	
–17	Coml	—	. . SCREW, self-tapping: Phillips drive; Bind H; SS; No. 4–40; 3/16 in lg (Att. Pt.) (Shakeproof)	2	
–18	M7483488P1	—	. . HANDLE	1	
–19	AN510–10–12	—	. . SCREW, mach: slot drive; FH; steel, cad pl; No. 10–32; 3/4 in lg (Att. Pt.)	2	
✦					
–21	M7480544P20E	—	. . NUT, hex (Att. Pt.)	2	
–22	K7004714P2	—	. . BUSHING	1	
–23	K7001165P1	—	. . BRACKET	1	
–24	AN520B10–5	—	. . SCREW, mach: slot drive; RH; brass, black oxidized; No. 10–32; 5/16 in lg (Att. Pt.)	4	
–25	AN936B10B	—	. . WASHER, lock: bronze, tinned; round, No. 10; shakeproof-type, tw ext teeth (Att. Pt.)	4	
–26	AN345–10	—	. . NUT, hex: steel, cad pl; No. 10–32 (Att. Pt.)	4	
–27	P7772589P2	—	. . HINGE	1	
–28	AN515–8–7	—	. . SCREW, mach: slot drive; RH; steel, cad pl; No. 8–32; 7/16 in lg (Att. Pt.)	5	
–29	M7403506P3	—	. . NUT, anchor (Att. Pt.)	1	
–30	P7772592P9	—	. . GASKET	2	
–31	P7772592P8	—	. . GASKET	2	

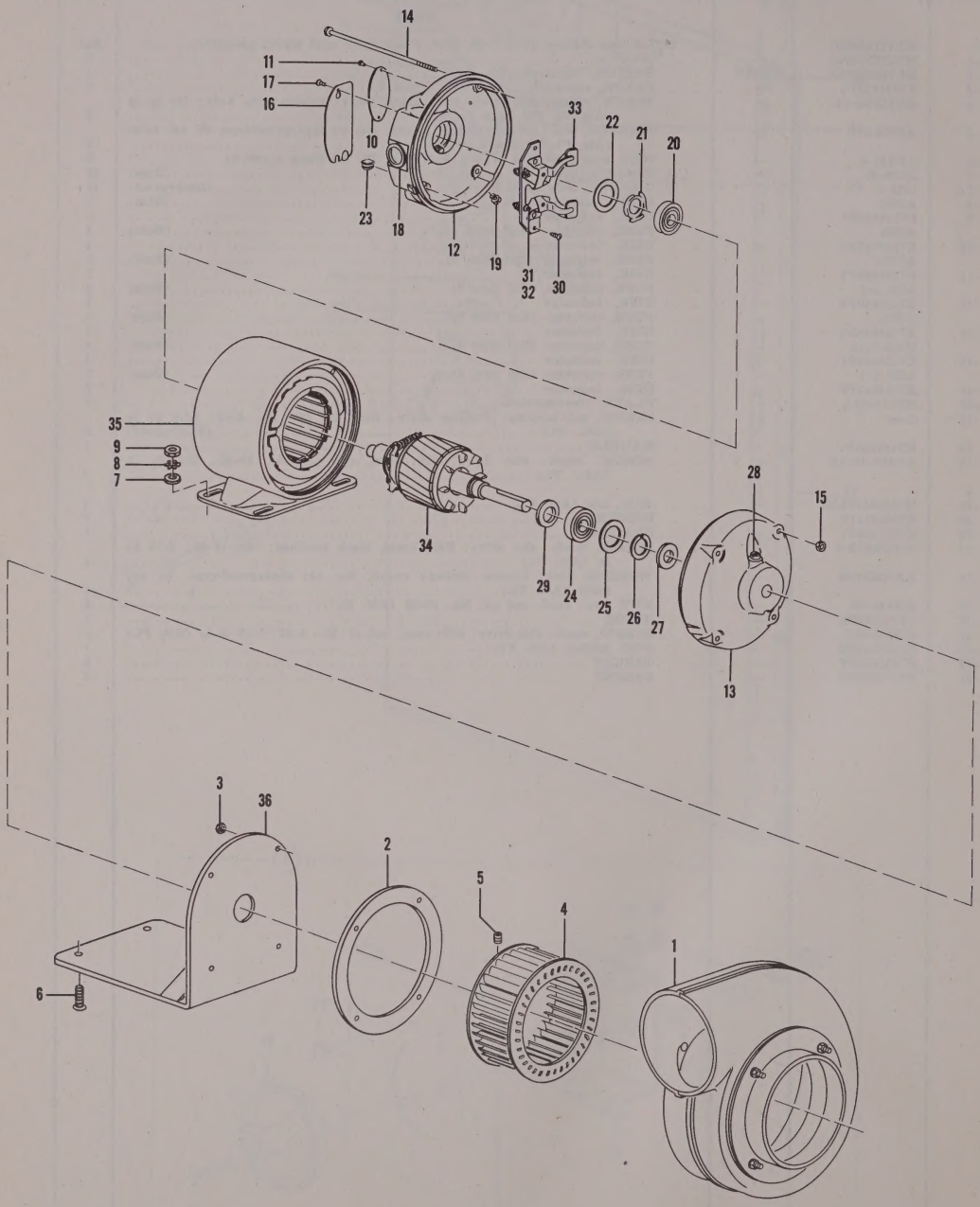

Figure 53. Blower

FIG. & INDEX NO.	PART NUMBER	REF SYMBOL	NOMENCLATURE 1 2 3 4 5 6 7	UNITS PER ASSY	APPLI-CATION
			BLOWER		
53–	P7700709P1	B2701	. BLOWER (See Figures 2–89, 3–90, 4–92, 5 and 6 for next higher assembly)	Ref	
–1	26–SA–77	—	. . HOUSING (Amer Blower)	1	
–2	H85065P7	—	. . GASKET (Amer Blower)	1	
–3	Coml	—	. . NUT, lock: steel, cad pl; No. 10–24 (Att. Pt. for items 1 and 2) (Amer Screw)	4	
–4	57–SA–577	—	. . IMPELLER, centrifugal (Amer Blower)	1	
–5	Coml	—	. . SCREW, set: Allen drive; headless; steel, cad pl; 1/4 in–20; 1/4 in lg; cup point (Att. Pt.) (Allen Mfg)	2	
	5KH33KD75	—	. . MOTOR, AC (GE)	1	
–6	AN505–416–12	—	. . SCREW, mach: slot drive; FH; steel, cad pl; 1/4 in–20; 3/4 in lg (Att. Pt.)	4	
–7	AN960–416	—	. . WASHER, flat: steel, cad pl; 1/4 in (Att. Pt.)	4	
–8	AN936B416	—	. . WASHER, lock: steel, cad pl; round, 1/4 in; shakeproof-type, tw ext teeth (Att. Pt.)	4	
–9	AN340–416	—	. . NUT, hex: steel, cad pl; 1/4 in–20 (Att. Pt.)	4	
–10	NP59441B	—	. . . PLATE, identification (GE)	1	
–11	K5828716AA2	—	. . . PIN, escutcheon (Att. Pt.) (GE)	1	
–12	M5842473ASP1	—	. . . SHIELD, end (GE)	1	
–13	M5842483ADP2	—	. . . SHIELD, end (GE)	1	
–14	K5826943ABP21	—	. . . BOLT, mach (Att. Pt. for items 12 and 13) (GE)	4	
–15	AN345–10	—	. . . NUT, hex: steel, cad pl; No. 10–32 (Att. Pt. for items 12 and 13)	4	
	K5893090AAG10	—	. . . SHIELD SUBASSEMBLY, end (GE)	1	
–16	K5868596AAP3	—	. . . . COVER (GE)	1	
–17	AN520–6–4	—	. . . . SCREW, mach: slot drive; RH; steel, cad pl; No. 6–40; 1/4 in lg (Att. Pt.)	2	
–18	K5826908AA1	—	. . . . COVER (GE)	1	
–19	K5828721AAP2	—	. . . . PLUG, machine thread (GE)	2	
–20	K5855005AEP3	—	. . . . BEARING, ball (GE)	1	
–21	K8124385AAP1	—	. . . . WASHER, spring (GE)	1	
–22	K5855014AA	—	. . . . SHIM (GE)	AR	
–23	K5828746AA1	—	. . . . GROMMET (GE)	1	
	K5893091AAG9	—	. . . SHIELD SUBASSEMBLY, end (GE)	1	
–24	K5855005AEP3	—	. . . . BEARING, ball (GE)	1	
–25	K5855014AA4	—	. . . . WASHER, flat (GE)	1	
–26	K5855011AA1	—	. . . . WASHER, flat (GE)	1	
–27	K5855012AA1	—	. . . . PACKING (GE)	1	
–28	K5828721AAP2	—	. . . . PLUG, machine thread (GE)	2	
–29	K8701408AAP1	—	. . . WASHER, extruded (GE)	1	
	K5868647ABG1	—	. . . SWITCH, centrifugal (GE)	1	
–30	AN504–6–6	—	. . . SCREW, self-tapping: slot drive; RH; steel, cad pl; No. 6–32; 3/8 in lg (Att. Pt.)	2	
–31	K5826951AA10	—	. . . . TERMINAL, stud (GE)	2	
–32	AN345–8	—	. . . . NUT, hex: steel, cad pl; No. 8–36	6	
–33	No Number	—	. . . . SWITCH, centrifugal (K5868648AA1, K5868649AA1, K5826651AA1 and K5826952AA1, assembled) (GE)	1	
–34	No Number	—	. . . ROTOR, motor (K8719329BAG1, K5868593AA–5 and K5855330AAG9, assembled) (GE)	1	
–35	No Number	—	. . . STATOR, motor (K8719328ABG2 and K5861510AFG22 assembled) (GE)	1	
–36	H85065P3	—	. . BRACKET (Amer Blower)	1	

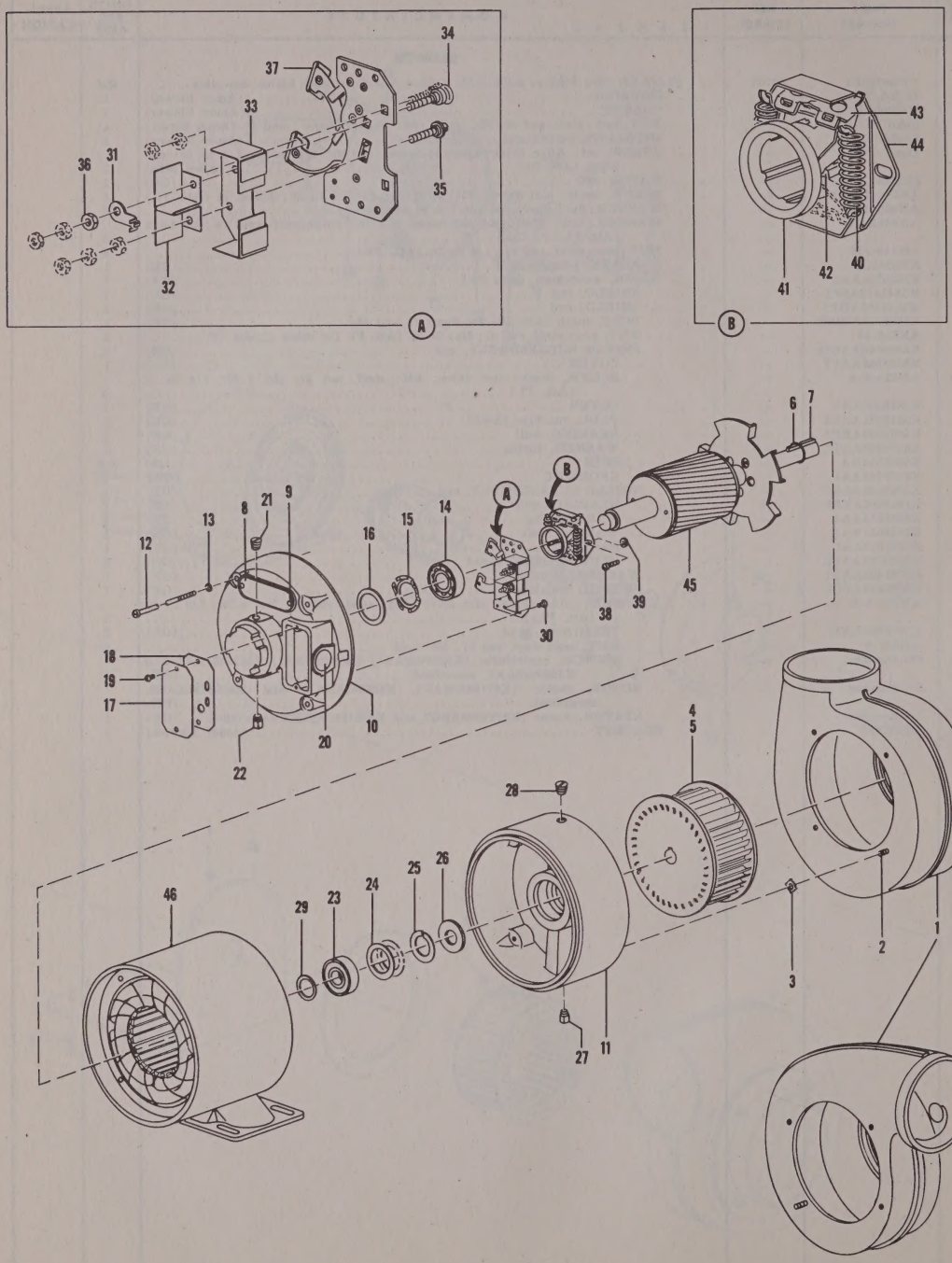

Figure 54. Blower

FIG. & INDEX NO.	PART NUMBER	REF SYMBOL	1 2 3 4 5 6 7 NOMENCLATURE	UNITS PER ASSY	APPLI-CATION
			BLOWER		
54–	P7700708P1	B2702	. BLOWER (See Figures 2–360, 3–353, 4–355, 5 and 6 for next higher assembly)	Ref	
54–	P7700708P2	B10002	. BLOWER (See Figure 66–63 for next higher assembly)	Ref	
54–	P7700708P2	B10102	. BLOWER (See Figure 71–53 for next higher assembly)	Ref	
54–	P7700708P1	B10401	. BLOWER (See Figure 85–27 for next higher assembly)	Ref	
			Note: Figure 54 shows the impeller housing in two positions: one for P7700708P1 and the other for P7700708P2. The housing shown in the line of explosion is for P7700708P1. The alternate view (shown in a dropped position in the illustration) is rotated for its position in P7700708P2.		
–1	26–SA–77	—	. . HOUSING (Amer Blower)	1	
–2	AN515–10–6	—	. . SCREW, mach: slot drive; RH; steel, cad pl; No. 10–24; 5/8 in lg (Att. Pt.)	4	
–3	AN936B10	—	. . WASHER, lock: steel, cad pl; round, No. 10; shakeproof-type, tw ext teeth (Att. Pt.)	4	
–4	57–SA–589	—	. . IMPELLER, centrifugal (Amer Blower)	1	
–5	Coml	—	. . SCREW, set: Allen drive; headless; steel, cad pl; 1/4 in–20; 1/4 in lg; cup point (Att. Pt.) (Allen Mfg)	4	
	5KH48BB21	—	. . MOTOR, AC (GE)	1	
–6	K5826926AA	—	. . . RING, retainer (GE)	1	
–7	K5826928AAP21	—	. . . KEY (GE)	1	
–8	NP76510	—	. . . PLATE, identification (GE)	1	
–9	K5828716AAP2	—	. . . PIN, escutcheon (Att. Pt.) (GE)	2	
–10	No Number	—	. . . SHIELD, end (K5828746AAP1 and M5845908KEP1, assembled) (GE)	1	
–11	M5845908KFP1	—	. . . SHIELD, end (GE)	1	
–12	K5826943AB2B	—	. . . BOLT, mach (Att. Pt. for items 10 and 11) (GE)	4	
–13	AN935–10L	—	. . . WASHER, lock: steel, cad pl; No. 10 (Att. Pt. for items 10 and 11)	4	
	K5826986BTG5	—	. . . SHIELD SUBASSEMBLY, end (GE)	1	
–14	K5828718AAP1	—	. . . . BEARING, ball (GE)	1	
–15	K5828720AAP1	—	. . . . WASHER, spring (GE)	1	
–16	K5828719AA	—	. . . . SHIM (GE)	1	
–17	K5828745AAP1	—	. . . . COVER (GE)	1	
–18	K5828745ABP1	—	. . . . GASKET (GE)	1	
–19	AN520–6–4	—	. . . . SCREW, mach: slot drive; RH; steel, cad pl; No. 6–40; 1/4 in lg (Att. Pt. for items 17 and 18)	2	
–20	K5826908AAP3	—	. . . . COVER (GE)	1	
–21	K5859846AAP4	—	. . . . PLUG, machine thread (GE)	1	
–22	K8104500AAP2	—	. . . . PLUG, machine thread (GE)	1	
	K5826987DKG2	—	. . . SHIELD SUBASSEMBLY, end (GE)	1	
–23	K5828718AAP1	—	. . . . BEARING, ball (GE)	1	
–24	K5828719AA	—	. . . . SHIM (GE)	AR	
–25	K5828722AAP1	—	. . . . WASHER, "C" (GE)	1	
–26	K5828723AAP1	—	. . . . PACKING (GE)	1	
–27	K8104500AAP2	—	. . . . PLUG, machine thread (GE)	1	
–28	K5859846AAP4	—	. . . . PLUG, machine thread (GE)	1	
–29	K8701410AAP1	—	. . . WASHER, extruded (GE)	1	
	K8104389KB2	—	. . . SWITCH, centrifugal (GE)	1	
–30	K5828727AAP1	—	. . . SCREW, self-tapping (Att. Pt.) (GE)	2	
–31	K8719257AAP1	—	. . . . TERMINAL, lug (GE)	1	
–32	K8743917AAP1	—	. . . . INSULATION, plate (GE)	1	
–33	K8743916AAP1	—	. . . . INSULATION, plate (GE)	1	
–34	K8719253AAP1	—	. . . . TERMINAL, stud (GE)	1	
–35	K5826951AAP1	—	. . . . TERMINAL, stud (GE)	2	
–36	AN345–8	—	. . . . NUT, hex: steel, cad pl; No. 8–36 (GE)	8	
–37	K8104389AAG3	—	. . . . SWITCH, centrifugal (GE)	1	
	K5855340AA9	—	. . . MECHANISM, centrifugal switch (GE)	1	
–38	K5852794P4	—	. . . SCREW, self-tapping (Att. Pt.) (GE)	2	
–39	K5828825AAP3	—	. . . WASHER, flat (Att. Pt.) (GE)	2	
–40	K8127254AA	—	. . . . SPRING (GE)	2	
–41	K8701935AA	—	. . . . COLLAR, shaft (GE)	1	
–42	M8144049AA	—	. . . . WEIGHT, governor (GE)	1	
–43	M8144043AA	—	. . . . PIVOT (GE)	2	
–44	M8144042AA	—	. . . . PLATE, back (GE)	1	
–45	No Number	—	. . . ROTOR, motor (K5855050AHP6, K5852753AC1 and K5859872CA1 assembled) (GE)	1	
–46	No Number	—	. . . STATOR, motor (K5852755AA8 and K5828912AA31 assembled) (GE)	1	

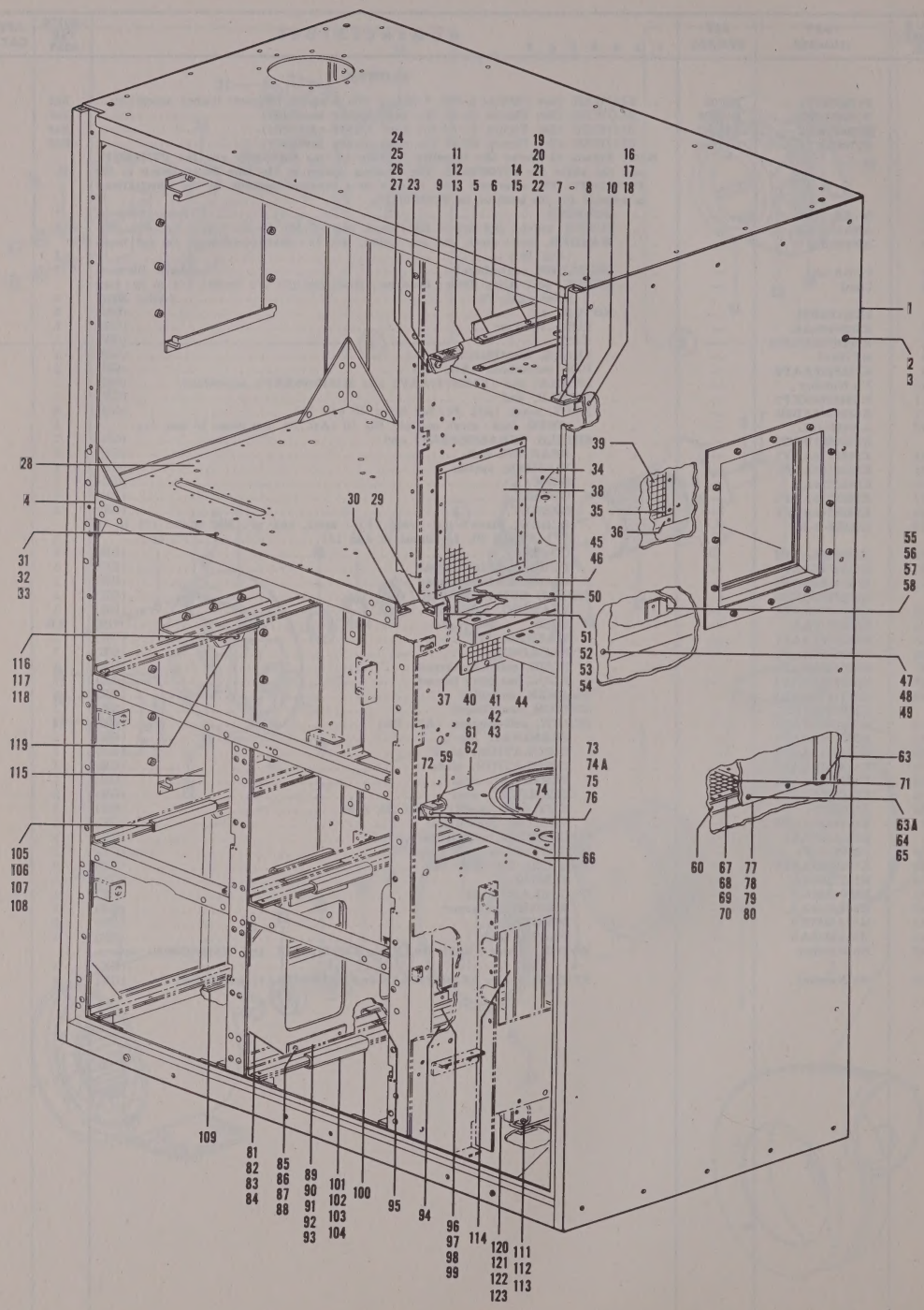

Figure 55. Frame, Front View (Sheet 1 of 2 sheets, Index Nos. 1 thru 123)

FIG. & INDEX NO.	PART NUMBER	REF SYMBOL	NOMENCLATURE 1 2 3 4 5 6 7	UNITS PER ASSY	APPLI-CATION
			FRAME		
55–	ML7353099G1	—	. FRAME (See Figures 2–18, 3–19, 4–21, 5 and 6 for next higher assembly)	Ref	
–1	ML7353097G1	—	. . COVER ASSEMBLY (Removed on Figures 2, 3 and 4, sheet 1) (See Figure 56 for breakdown)	1	
–2	AN520B10R6	—	. . SCREW, mach: Phillips drive; RH; brass, black oxidized; No. 10–32; 3/8 in lg (Att. Pt.)	136	
–3	1910	—	. . WASHER, lock (Att. Pt.) (Shakeproof)	136	
–4	No Number	—	. . RACK (W7353099P2 thru P9, P15 thru P28, P32, P33, P37 thru P46, P48, P50 thru P55, P57, P61, P81, P103 and P109, assembled)	1	
–5	K7001082P1	—	. . SLIDE, drawer	1	
–6	M7483068P1	—	. . GUIDE, drawer	1	
–7	K7001082P2	—	. . SLIDE, drawer	1	
–8	M7483068P2	—	. . GUIDE, drawer	1	
–9	K7003323P1	—	. . CLOTH, wire: 23-11/16 in lg	1	
–10	K7003323P1	—	. . CLOTH, wire: 24 in lg	1	
–11	ML7665285G1	—	. . CHASSIS	1	
–12	AN515–6R6	—	. . SCREW, mach: Phillips drive; RH; steel, cad pl; No. 6–32; 3/8 in lg (Att. Pt. for items 9 and 11)	2	
–13	AN936B6B	—	. . WASHER, lock: bronze, tinned; round, No. 6; shakeproof-type, tw ext teeth (Att. Pt. for items 9 and 11)	2	
–14	AN505–6R8	—	. . SCREW, mach: Phillips drive; FH; steel, cad pl; No. 6–32; 1/2 in lg (Att. Pt. for items 5 thru 9 and 11)	10	
–15	AN936C6B	—	. . WASHER, lock: bronze, tinned; round, No. 6; shakeproof-type, tw csk teeth (Att. Pt. for items 5 thru 9 and 11)	10	
–16	AN520–10R8	—	. . SCREW, mach: Phillips drive; RH; steel, cad pl; No. 10–32; 1/2 in lg (Att. Pt. for items 10 and 11)	8	
–17	AN936B10B	—	. . WASHER, lock: bronze, tinned; round, No. 10; shakeproof-type, tw ext teeth (Att. Pt. for items 10 and 11)	8	
–18	AN345–10	—	. . NUT, hex: steel, cad pl; No. 10–32 (Att. Pt. for items 10 and 11)	8	
–19	M7403990P1	—	. . BRACKET	1	
–20	AN520–10R6	—	. . SCREW, mach: Phillips drive; RH; steel, cad pl; No. 10–32; 3/8 in lg (Att. Pt.)	5	
–21	AN936B10B	—	. . WASHER, lock: bronze, tinned; round, No. 10; shakeproof-type, tw ext teeth (Att. Pt.)	5	
–22	AN345–10	—	. . NUT, hex: steel, cad pl; No. 10–32 (Att. Pt.)	5	
–23	P7700690P3	—	. . BRACKET	1	
–24	K7003323P1	—	. . CLOTH, wire: 23-11/16 in lg	1	
–25	AN520–10R10	—	. . SCREW, mach: Phillips drive; RH; steel, cad pl; No. 10–32; 5/8 in lg (Att. Pt. for items 23 and 24)	8	
–26	AN936B10B	—	. . WASHER, lock: bronze, tinned; round, No. 10; shakeproof-type, tw ext teeth (Att. Pt. for items 23 and 24)	8	
–27	AN345–10	—	. . NUT, hex: steel, cad pl; No. 10–32 (Att. Pt. for items 23 and 24)	8	
–28	ML7772593G1	—	. . PARTITION	1	
–29	K7003323P1	—	. . CLOTH, wire: 20-7/16 in lg	2	
–30	K7003323P1	—	. . CLOTH, wire: 26-3/4 in lg	2	
–31	AN515–8R8	—	. . SCREW, mach: Phillips drive; RH; steel, cad pl; No. 8–32; 1/2 in lg (Att Pt. for items 28, 29 and 30)	26	
–32	AN936B8B	—	. . WASHER, lock: bronze, tinned; round, No. 8; shakeproof-type, tw ext teeth (Att. Pt. for items 28, 29 and 30)	26	
–33	AN340–8	—	. . NUT, hex: steel, cad pl; No. 8–32 (Att. Pt. for items 28, 29 and 30)	26	
–34	K7001536P1	—	. . STRIP, batten	4	
–35	K7001535P1	—	. . STRIP, batten	2	
–36	K7001537P1	—	. . STRIP, batten	2	
–37	K7001533P1	—	. . STRIP, batten	2	
–38	W7353099P63	—	. . CLOTH, wire	1	
–39	W7353099P64	—	. . CLOTH, wire	1	
–40	W7353099P62	—	. . CLOTH, wire	1	
–41	AN515–8R8	—	. . SCREW, mach: Phillips drive; RH; steel, cad pl; No. 8–32; 1/2 in lg (Att. Pt. for items 34 thru 40)	56	
–42	AN936B8B	—	. . WASHER, lock: bronze, tinned; round, No. 8; shakeproof-type, tw ext teeth (Att. Pt. for items 34 thru 40)	56	
–43	AN340–8	—	. . NUT, hex: steel, cad pl; No. 8–32 (Att. Pt. for items 34 thru 40)	56	
–44	ML7665284G1	—	. . CHASSIS	1	
–45	AN520–10R6	—	. . SCREW, mach: Phillips drive; RH; steel, cad pl; No. 10–32; 3/8 in lg (Att. Pt.)	8	
–46	AN936B10B	—	. . WASHER, lock: bronze, tinned; round, No. 10; shakeproof-type, tw ext teeth (Att. Pt.)	8	
–47	AN520–10R8	—	. . SCREW, mach: Phillips drive; RH; steel, cad pl; No. 10–32; 1/2 in lg (Att. Pt.)	8	
–48	AN936B10B	—	. . WASHER, lock: bronze, tinned; round, No. 10; shakeproof-type, tw ext teeth (Att. Pt.)	8	
–49	AN345–10	—	. . NUT, hex: steel, cad pl; No. 10–32 (Att. Pt.)	8	
–50	P7700690P2	—	. . BRACKET	1	
–51	K7003323P1	—	. . CLOTH, wire: 20-7/16 in lg	1	
–52	AN520–10R10	—	. . SCREW, mach: Phillips drive; RH; steel, cad pl; No. 10–32; 5/8 in lg (Att. Pt. for items 50 and 51)	8	
–53	AN936B10B	—	. . WASHER, lock: bronze, tinned; round, No. 10; shakeproof-type, tw ext teeth (Att. Pt. for items 50 and 51)	8	
–54	AN345–10	—	. . NUT, hex: steel, cad pl; No. 10–32 (Att. Pt. for items 50 and 51)	8	
–55	K7002852P3	—	. . BRACKET	1	
–56	AN510–10R8	—	. . SCREW, mach: Phillips drive; FH; steel, cad pl; No. 10–32; 1/2 in lg (Att. Pt.)	2	
–57	AN936B10B	—	. . WASHER, lock: bronze, tinned; round, No. 10; shakeproof-type, tw ext teeth (Att. Pt.)	2	
–58	AN345–10	—	. . NUT, hex: steel, cad pl; No. 10–32 (Att. Pt.)	2	
–59	K7003323P1	—	. . CLOTH, wire: 23-11/16 in lg	1	

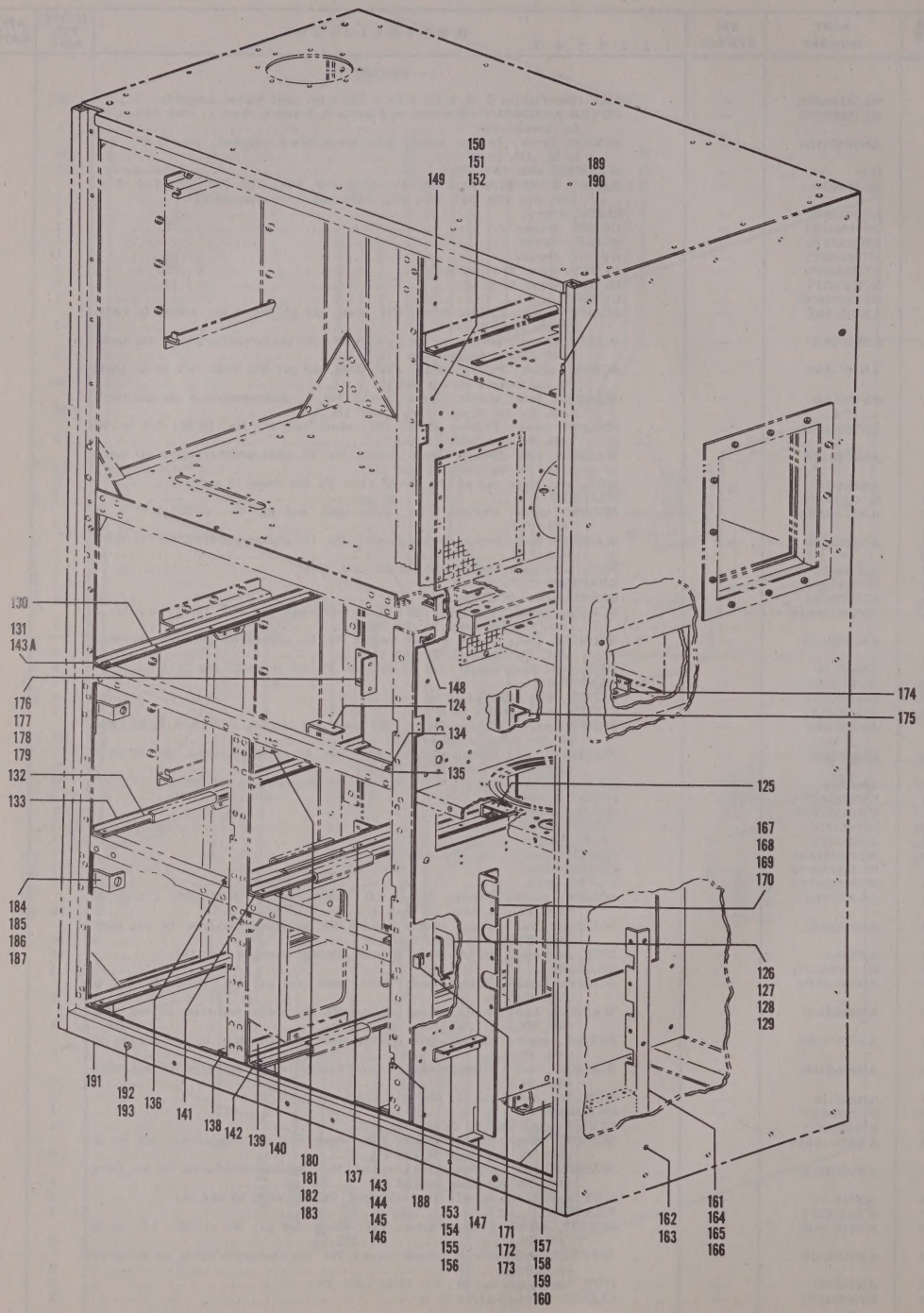

Figure 55. Frame, Front View (Sheet 2 of 2 sheets, Index Nos. 124 thru 193)

FIG. & INDEX NO.	PART NUMBER	REF SYMBOL	1 2 3 4 5 6 7 NOMENCLATURE	UNITS PER ASSY	APPLI-CATION
			FRAME (Cont)		
55–60	K7003323P1	—	. . CLOTH, wire: 24 in lg	1	
	ML7665293G1	—	. . CHASSIS	1	
–61	AN520–10R6	—	. . SCREW, mach: Phillips drive; RH; steel, cad pl; No. 10–32; 3/8 in lg (Att. Pt. for items 59 and ML7665293G1)	6	
–62	AN936B10B	—	. . WASHER, lock: bronze, tinned; round, No. 10; shakeproof-type, tw ext teeth (Att. Pt. for items 59 and ML7665293G1)	6	
–63	AN520–10R10	—	. . SCREW, mach: Phillips drive; RH; steel, cad pl; No. 10–32; 5/8 in lg (Att. Pt. for items 60 and ML7665293G1)	1	
–63A	AN520–10R8	—	. . SCREW, mach: Phillips drive; RH; steel, cad pl; No. 10–32; 1/2 in lg (Att. Pt. for items 60 and ML7665293G1)	7	
–64	AN936B10B	—	. . WASHER, lock: bronze, tinned; round, No. 10; shakeproof-type, tw ext teeth (Att. Pt. for items 60 and ML7665293G1)	8	
–65	AN345–10	—	. . NUT, hex: steel, cad pl; No. 10–32 (Att. Pt. for items 60 and ML7665293G1)	8	
–66	No Number	—	. . . CHASSIS (W7665293P2 and P3 assembled)	1	
–67	K7001522P1	—	. . . STRIP, batten	4	
–68	AN520–10–8	—	. . . SCREW, mach: slot drive; RH; steel, cad pl; No. 10–32; 1/2 in lg (Att. Pt.)	12	
–69	AN936B10B	—	. . . WASHER, lock: bronze, tinned; round, No. 10; shakeproof-type, tw ext teeth (Att. Pt.)	12	
–70	AN345–10	—	. . . NUT, hex: steel, cad pl; No. 10–32 (Att. Pt.)	12	
–71	ML7665293P7	—	. . . CLOTH, wire	1	
–72	P7700690P1	—	. . BRACKET	1	
–73	K7003323P1	—	. . CLOTH, wire: 23-11/16 in lg	1	
–74	AN520–10R10	—	. . SCREW, mach: Phillips drive; RH; steel, cad pl; No. 10–32; 5/8 in lg (Att. Pt. for items 72 and 73)	1	
–74A	AN520–10R8	—	. . SCREW, mach: Phillips drive; RH; steel, cad pl; No. 10–32; 1/2 in lg (Att. Pt. for items 72 and 73)	7	
–75	AN936B10B	—	. . WASHER, lock: bronze, tinned; round, No. 10; shakeproof-type, tw ext teeth (Att. Pt. for items 72 and 73)	8	
–76	AN345–10	—	. . NUT, hex: steel, cad pl; No. 10–32 (Att. Pt. for items 72 and 73)	8	
–77	T7665286P1	—	. . PLATE, reinforcing	1	
–78	AN520–10R8	—	. . SCREW, mach: Phillips drive; RH; steel, cad pl; No. 10–32; 1/2 in lg (Att. Pt.)	12	
–79	AN936B10B	—	. . WASHER, lock: bronze, tinned; round, No. 10; shakeproof-type, tw ext teeth (Att. Pt.)	12	
–80	AN345–10	—	. . NUT, hex: steel, cad pl; No. 10–32 (Att. Pt.)	12	
–81	P7702825P1	—	. . PLATE, mounting	1	
–82	AN520–10R8	—	. . SCREW, mach: Phillips drive; RH; steel, cad pl; No. 10–32; 1/2 in lg (Att. Pt.)	4	
–83	AN936B10B	—	. . WASHER, lock: bronze, tinned; round, No. 10; shakeproof-type, tw ext teeth (Att. Pt.)	4	
–84	AN345–10	—	. . NUT, hex: steel, cad pl; No. 10–32 (Att. Pt.)	4	
–85	AN520–10R8	—	. . SCREW, mach: Phillips drive; RH; steel, cad pl; No. 10–32; 1/2 in lg (Att. Pt.)	8	
–86	AN936B10B	—	. . WASHER, lock: bronze, tinned; round, No. 10; shakeproof-type, tw ext teeth (Att. Pt.)	8	
–87	AN960–10	—	. . WASHER, flat: steel, cad pl; round, No. 10 (Att. Pt.)	8	
–88	AN345–10	—	. . NUT, hex: steel, cad pl; No. 10–32 (Att. Pt.)	8	
–89	K7002782P1	—	. . PLATE, angle	4	
–90	AN520–10R8	—	. . SCREW, mach: Phillips drive; RH; steel, cad pl; No. 10–32; 1/2 in lg (Att. Pt.)	8	
–91	AN936B10B	—	. . WASHER, lock: bronze, tinned; round, No. 10; shakeproof-type, tw ext teeth (Att. Pt.)	8	
–92	AN960–10	—	. . WASHER, flat: steel, cad pl; round, No. 10 (Att. Pt.)	8	
–93	AN345–10	—	. . NUT, hex: steel, cad pl; No. 10–32 (Att. Pt.)	8	
–94	K7002790P1	—	. . PLATE, bottom	1	
–95	K7003079P2	—	. . BRACKET	1	
–96	K7003079P1	—	. . BRACKET	1	
–97	AN505–6R10	—	. . SCREW, mach: Phillips drive; FH; steel, cad pl; No. 6–32; 5/8 in lg (Att. Pt. for items 94, 95 and 96)	4	
–98	AN936B6B	—	. . WASHER, lock: bronze, tinned; round, No. 6; shakeproof-type, tw ext teeth (Att. Pt. for items 94, 95 and 96)	4	
–99	AN340–6	—	. . NUT, hex: steel, cad pl; No. 6–32 (Att. Pt. for items 94, 95 and 96)	4	
–100	K7002788P1	—	. . PLATE, bottom	3	
–101	K7003079P1	—	. . BRACKET	6	
–102	AN505–6R10	—	. . SCREW, mach: Phillips drive; FH; steel, cad pl; No. 6–32; 5/8 in lg (Att. Pt. for items 100 and 101)	12	
–103	AN936B6B	—	. . WASHER, lock: bronze, tinned; round, No. 6; shakeproof-type, tw ext teeth (Att. Pt. for items 100 and 101)	12	
–104	AN340–6	—	. . NUT, hex: steel, cad pl; No. 6–32 (Att. Pt. for items 100 and 101)	12	
–105	K7003079P1	—	. . BRACKET	8	
–106	AN505–6R10	—	. . SCREW, mach: Phillips drive; FH; steel, cad pl; No. 6–32; 5/8 in lg (Att. Pt.)	16	
–107	AN936B6B	—	. . WASHER, lock: bronze, tinned; round, No. 6; shakeproof-type, tw ext teeth (Att. Pt.)	16	
–108	AN340–6	—	. . NUT, hex: steel, cad pl; No. 6–32 (Att. Pt.)	16	
–109	K7003939P1	—	. . PLATE, reinforcing	2	
✦ –111	AN505–416R14	—	. . SCREW, mach: Phillips drive; FH; steel, cad pl; 1/4 in–20; 7/8 in lg (Att. Pt.)	4	
–112	AN936B416B	—	. . WASHER, lock: bronze, tinned; round, 1/4 in; shakeproof-type, tw ext teeth (Att. Pt.)	4	
–113	AN340–416	—	. . NUT, hex: steel, cad pl; 1/4 in–20 (Att. Pt.)	4	
–114	P7703064P1	—	. . PLATE, angle	1	
–115	P7703064P2	—	. . PLATE, angle	1	

FIG. & INDEX NO.	PART NUMBER	REF SYMBOL	NOMENCLATURE 1 2 3 4 5 6 7	UNITS PER ASSY	APPLI-CATION
			FRAME (Cont)		
55–116	AN515–416R12	—	. . SCREW, mach: Phillips drive; RH; steel, cad pl; 1/4 in–20; 3/4 in lg (Att. Pt. for items 114 and 115)	12	
–117	AN936B416B	—	. . WASHER, lock: bronze, tinned; round, 1/4 in; shakeproof-type, tw ext teeth (Att. Pt. for items 114 and 115)	12	
–118	AN340–416	—	. . NUT, hex: steel, cad pl; 1/4 in–20 (Att. Pt. for items 114 and 115)	12	
–119	M7404456P2	—	. . PLATE, angle	3	
–120	M7404456P1	—	. . PLATE, angle	3	
–121	AN505–8R8	—	. . SCREW, mach: Phillips drive; FH; steel, cad pl; No. 8–32; 5/8 in lg (Att. Pt. for items 119 and 120)	18	
–122	AN936B8B	—	. . WASHER, lock: bronze, tinned; round, No. 8; shakeproof-type, tw ext teeth (Att. Pt. for items 119 and 120)	18	
–123	AN340–8	—	. . NUT, hex: steel, cad pl; No. 8–32 (Att. Pt. for items 119 and 120)	18	
–124	K7002271P1	—	. . BRACKET	1	
–125	K7002271P3	—	. . BRACKET	1	
–126	K7002271P2	—	. . BRACKET	1	
–127	AN520–10R10	—	. . SCREW, mach: Phillips drive; RH; steel, cad pl; No. 10–32; 5/8 in lg (Att. Pt. for items 124, 125 and 126)	6	
–128	AN936B10B	—	. . WASHER, lock: bronze, tinned; round, No. 10; shakeproof-type, tw ext teeth (Att. Pt. for items 124, 125 and 126)	6	
–129	AN345–10	—	. . NUT, hex: steel, cad pl; No. 10–32 (Att. Pt. for items 124, 125 and 126)	6	
–130	M7403518P1	—	. . SLIDE, drawer	2	
–131	M7403517P1	—	. . GUIDE, drawer	2	
–132	M7403922P1	—	. . SLIDE, drawer	1	
–133	M7403921P1	—	. . GUIDE, drawer	1	
–134	M7403518P3	—	. . SLIDE, drawer	3	
–135	M7403517P3	—	. . GUIDE, drawer	3	
–136	M7403518P2	—	. . SLIDE, drawer	1	
–137	M7403517P2	—	. . GUIDE, drawer	1	
–138	M7403922P3	—	. . SLIDE, drawer	1	
–139	M7403921P3	—	. . GUIDE, drawer	1	
–140	M7403922P2	—	. . SLIDE, drawer	1	
–141	M7403921P2	—	. . GUIDE, drawer	1	
–142	M7403518P2	—	. . SLIDE, drawer	1	
–143	M7403517P2	—	. . GUIDE, drawer	1	
–143A	AN505–6R7	—	. . SCREW, mach: Phillips drive; FH; steel, cad pl; No. 6–32; 7/16 in lg (Att. Pt. for items 130, 131, 134 and 135)	4	
–144	AN505–6R8	—	. . SCREW, mach: Phillips drive; FH; steel, cad pl; No. 6–32; 1/2 in lg (Att. Pt. for items 130 thru 143)	16	
–145	AN936B6B	—	. . WASHER, lock: bronze, tinned; round, No. 6; shakeproof-type, tw ext teeth (Att. Pt. for items 130 thru 143)	20	
–146	AN340–6	—	. . NUT, hex: steel, cad pl; No. 6–32 (Att. Pt. for items 130 thru 143)	20	
–147	W7353301P1	—	. . PARTITION	1	
–148	K7003323P1	—	. . CLOTH, wire: 55-7/8 in lg	2	
–149	AN505–8R8	—	. . SCREW, mach: Phillips drive; FH; steel, cad pl; No. 8–32; 1/2 in lg (Att. Pt. for items 147 and 148)	2	
–150	AN520–10R8	—	. . SCREW, mach: Phillips drive; RH; steel, cad pl; No. 10–32; 1/2 in lg (Att. Pt. for items 147 and 148)	23	
–151	AN936B10B	—	. . WASHER, lock: bronze, tinned; round, No. 10; shakeproof-type, tw ext teeth (Att. Pt. for items 147 and 148)	23	
–152	AN345–10	—	. . NUT, hex: steel, cad pl; No. 10–32 (Att. Pt. for items 147 and 148)	23	
–153	ML7001106P1	—	. . BRACKET	1	
–154	AN520–10R8	—	. . SCREW, mach: Phillips drive; RH; steel, cad pl; No. 10–32; 1/2 in lg (Att. Pt.)	2	
–155	AN936B10B	—	. . WASHER, lock: bronze, tinned; round, No. 10; shakeproof-type, tw ext teeth (Att. Pt.)	2	
–156	AN345–10	—	. . NUT, hex: steel, cad pl; No. 10–32 (Att. Pt.)	2	
–157	K7002789P1	—	. . BRACKET	1	
–158	AN505–416R14	—	. . SCREW, mach: Phillips drive; FH; steel, cad pl; 1/4 in–20; 7/8 in lg (Att. Pt.)	3	
–159	AN936B416B	—	. . WASHER, lock: bronze, tinned; round, 1/4 in; shakeproof-type, tw ext teeth (Att. Pt.)	3	
–160	AN340–416	—	. . NUT, hex: steel, cad pl; 1/4 in–20 (Att. Pt.)	3	
–161	ML7483079G1	—	. . BRACKET	1	
–162	AN520B10R6	—	. . SCREW, mach: Phillips drive; RH; brass, black oxidized; No. 10–32; 3/8 in lg (Att. Pt.)	3	
–163	AN936A10B	—	. . WASHER, lock: bronze, tinned; round, No. 10; shakeproof-type, tw int teeth (Att. Pt.)	3	
–164	AN520–10R10	—	. . SCREW, mach: Phillips drive; RH; steel, cad pl; No. 10–32; 5/8 in lg (Att. Pt.)	3	
–165	AN936B10B	—	. . WASHER, lock: bronze, tinned; round, No. 10; shakeproof-type, tw ext teeth (Att. Pt.)	3	
–166	AN345–10	—	. . NUT, hex: steel, cad pl; No. 10–32 (Att. Pt.)	3	
–167	ML7483090G1	—	. . BRACKET	1	
–168	AN520–10R8	—	. . SCREW, mach: Phillips drive; RH; steel, cad pl; No. 10–32; 1/2 in lg (Att. Pt.)	4	
–169	AN936B10B	—	. . WASHER, lock: bronze, tinned; round, No. 10; shakeproof-type, tw ext teeth (Att. Pt.)	4	
–170	AN345–10	—	. . NUT, hex: steel, cad pl; No. 10–32 (Att. Pt.)	4	
–171	K7003352P1	—	. . ANGLE, plate	3	
–172	AN515–8R8	—	. . SCREW, mach: Phillips drive; RH; steel, cad pl; No. 8–32; 1/2 in lg (Att. Pt.)	6	
–173	AN936B8B	—	. . WASHER, lock: bronze, tinned; round, No. 8; shakeproof-type, tw ext teeth (Att. Pt.)	6	
–174	K7002858P1	—	. . BRACKET	1	
–175	K7002852P2	—	. . BRACKET	1	
–176	K7002852P1	—	. . BRACKET	3	

FIG. & INDEX NO.	PART NUMBER	REF SYMBOL	NOMENCLATURE 1 2 3 4 5 6 7	UNITS PER ASSY	APPLI-CATION
			FRAME (Cont)		
55–177	AN510–10R8	—	. . SCREW, mach: Phillips drive; FH; steel, cad pl; No. 10–32; 1/2 in lg (Att. Pt. for items 174, 175 and 176)	10	
–178	AN936B10B	—	. . WASHER, lock: bronze, tinned; round, No. 10; shakeproof-type, tw ext teeth (Att. Pt. for items 174, 175 and 176)	10	
–179	AN345–10	—	. . NUT, hex: steel, cad pl; No. 10–32 (Att. Pt. for items 174, 175 and 176)	10	
–180	K7002273P1	—	. . BRACKET	1	
–181	Coml	—	. . SCREW, mach: Phillips drive; FH; steel, cad pl; No. 8–32; 9/16 in lg (Att. Pt.) (Amer Screw)	2	
–182	AN936B8B	—	. . WASHER, lock: bronze, tinned; round, No. 8; shakeproof-type, tw ext teeth (Att. Pt.)	2	
–183	AN340–8	—	. . NUT, hex: steel, cad pl; No. 8–32 (Att. Pt.)	2	
–184	K7002272P1	—	. . BRACKET	2	
–185	AN510–10R8	—	. . SCREW, mach: Phillips drive; FH; steel, cad pl; No. 10–32; 1/2 in lg (Att. Pt.)	4	
–186	AN936B10B	—	. . WASHER, lock: bronze, tinned; round, No. 10; shakeproof-type, tw ext teeth (Att. Pt.)	4	
–187	AN345–10	—	. . NUT, hex: steel, cad pl; No. 10–32 (Att. Pt.)	4	
–188	K7005838P1	—	. . PLATE, stop	5	
–189	K7005843P1	—	. . PLATE, stop	1	
–190	AN505–6R6	—	. . SCREW, mach: Phillips drive; FH; steel, cad pl; No. 6–32; 3/8 in lg (Att. Pt. for items 188 and 189)	14	
–191	M7403522P1	—	. . MOUNTING, bracket	1	
–192	AN520B10R16	—	. . SCREW, mach: Phillips drive; RH; brass, black oxidized; No. 10–32; 1 in lg (Att. Pt.)	6	
–193	1910	—	. . WASHER, lock (Att. Pt.) (Shakeproof)	6	

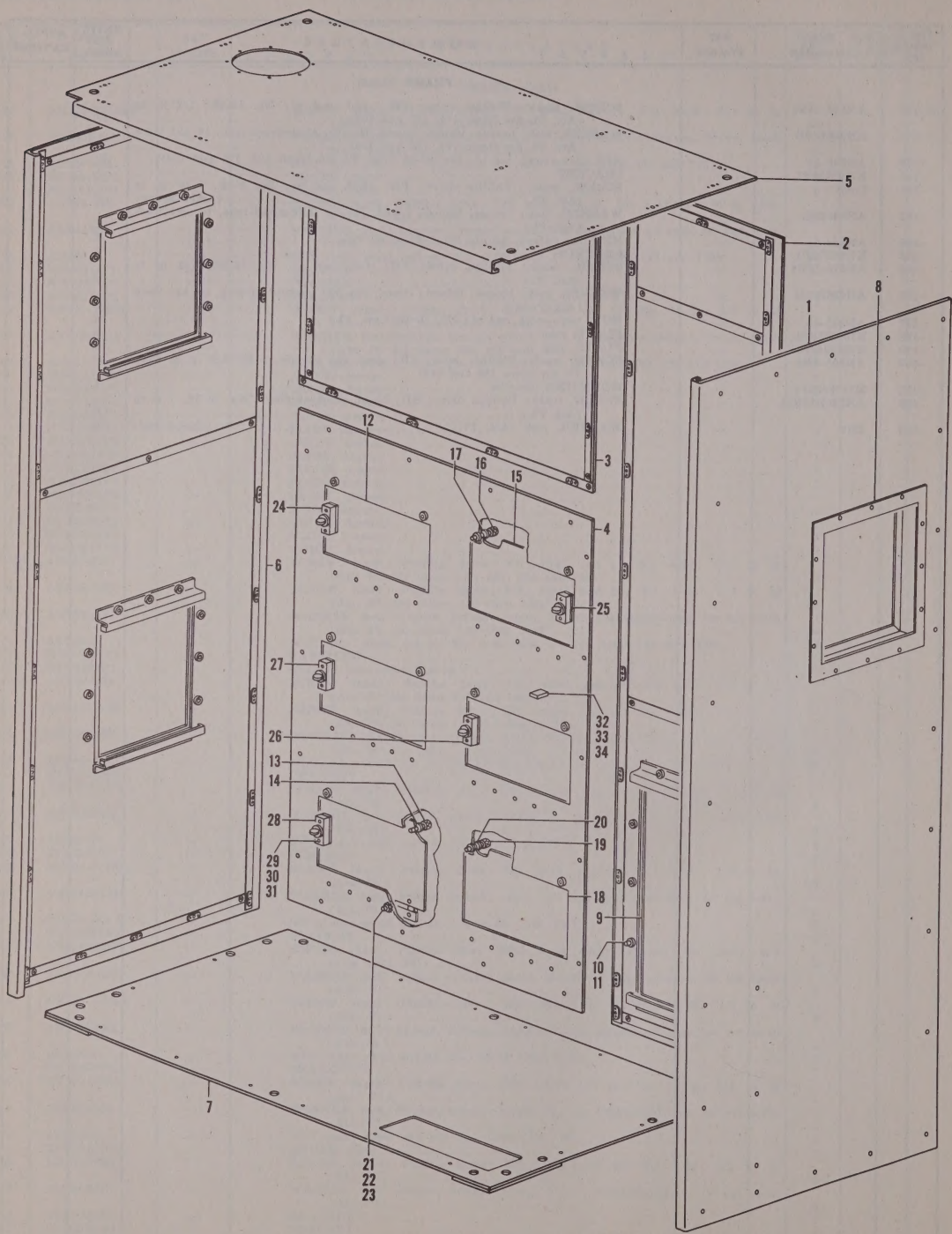

Figure 56. Cover Assembly

FIG. & INDEX NO.	PART NUMBER	REF SYMBOL	NOMENCLATURE 1 2 3 4 5 6 7	UNITS PER ASSY	APPLI-CATION
			COVER ASSEMBLY		
56-	ML7353097G1	—	. . COVER ASSEMBLY (See Figure 55-1 for next higher assembly)	Ref	
	ML7353098G1	—	. . . COVER ASSEMBLY	1	
-1	No Number	—	. . . . COVER (W7353098P8 and P7700651P1 assembled)	1	
-2	No Number	—	. . . . COVER (W7353098P2, P9, P10, P11, P12, P20, W7353097P11 and P25, assembled)	1	
-3	No Number	—	. . . . COVER (W7353098P3, P9, P15 and P16, assembled)	1	
-4	No Number	—	. . . . COVER (W7353098P4 and P24 assembled)	1	
-5	No Number	—	. . . . COVER (W7353098P5, P9, P10, P14, P17 and P19, assembled)	1	
-6	No Number	—	. . . . COVER (W7353098P7, P9, P10, P11, P13, P18, W7353097P11 and P25, assembled)	1	
-7	No Number	—	. . . . COVER (W7353098P6, P21, P22, P23 and M7408520G1, assembled)	1	
-8	P7772599P1	—	. . . FRAME	3	
-9	P7772565P1	—	. . . FRAME	1	
-10	AN520-10-7	—	. . . SCREW, mach: slot drive; RH; steel, cad pl; No. 10-32; 7/16 in lg (Att. Pt. for items 8 and 9)	52	
-11	AN936A10B	—	. . . WASHER, lock: bronze, tinned; round, No. 10; shakeproof-type, tw int teeth (Att. Pt. for items 8 and 9)	52	
-12	No Number	—	. . . DOOR AND HINGE SUBASSEMBLY (W7353097P9 and P10 assembled)	4	
-13	K7126123P1	—	. . . SCREW, captive	8	
-14	K7128235P2	—	. . . BUSHING	8	
-15	No Number	—	. . . DOOR AND HINGE SUBASSEMBLY (W7353097P10 and P17 assembled)	1	
-16	K7126123P1	—	. . . SCREW, captive	2	
-17	K7128235P2	—	. . . BUSHING	2	
-18	No Number	—	. . . DOOR AND HINGE SUBASSEMBLY (W7353097P10 and P33 assembled)	1	
-19	K7126123P1	—	. . . SCREW, captive	2	
-20	K7128235P2	—	. . . BUSHING	2	
-21	AN520B10-7	—	. . . SCREW, mach: slot drive; RH; brass, black oxidized; No. 10-32; 7/16 in lg (Att. Pt. for items 12, 15 and 18)	30	
-22	AN936B10B	—	. . . WASHER, lock: bronze, tinned; round, No. 10; shakeproof-type, tw ext teeth (Att. Pt. for items 12, 15 and 18)	30	
-23	AN345-10	—	. . . NUT, hex: steel, cad pl; No. 10-32 (Att. Pt. for items 12, 15 and 18)	30	
-24	ML7460330G5	S2713B	. . . SWITCH, interlock	1	
-25	ML7460330G5	S2714B	. . . SWITCH, interlock	1	
-26	ML7460330G5	S2715B	. . . SWITCH, interlock	1	
-27	ML7460330G5	S2716B	. . . SWITCH, interlock	1	
-28	ML7460330G5	S2717B	. . . SWITCH, interlock	1	
-29	AN515B6R12	—	. . . SCREW, mach: Phillips drive; RH; brass, black oxidized; No. 6-32; 3/4 in lg (Att. Pt. for items 24 thru 28)	10	
-30	AN936B6B	—	. . . WASHER, lock: bronze, tinned; round, No. 6; shakeproof-type, tw ext teeth (Att. Pt. for items 24 thru 28)	10	
-31	AN340-6	—	. . . NUT, hex: steel, cad pl; No. 6-32 (Att. Pt. for items 24 thru 28)	10	
-32	K7002860P1	—	. . . BLOCK, guide	1	
-33	AN515B6-10	—	. . . SCREW, mach: slot drive; RH; brass, black oxidized; No. 6-32; 5/8 in lg (Att. Pt.)	2	
-34	1906	—	. . . WASHER, lock (Att. Pt.) (Shakeproof)	2	
			CONTROL MONITOR GROUP OA-102/CPS-6B		
57-	ML7771855G1	—	CONTROL MONITOR GROUP OA-102/CPS-6B	1	
-1	ML7352790G1	—	. CABINET, transmitter-receiver control (See Figure 58 for breakdown)	1	
-2	ML7353902G1	—	. RADAR SET CONTROL C-553/CPS-6B (See Figure 62 for breakdown)	1	
-3	ML7352666G1	—	. RADAR SET CONTROL C-554/CPS-6B (See Figure 63 for breakdown)	1	
-4	ML7352557G1	—	. VOLTAGE REGULATOR CN-92/CPS-6B (See Figure 64 for breakdown)	1	
-5	ML7666740G1	—	. INTERLOCK CONTROL C-556/CPS-6B (See Figure 65 for breakdown)	1	
-6	NP136341B	—	. PLATE, identification	1	
-7	Coml	—	. SCREW, self-tapping: Phillips drive; Bind H; SS, black oxidized; No. 4-40; 3/16 in lg (Att. Pt.) (Shakeproof)	4	
-8	AN3106-28-12S	P2901	. CONNECTOR, plug	1	
-9	AN3057-16	—	. CLAMP	1	
-10	NP137427L	—	. MARKER, cable	1	
-11	AN3106-28-16S	P2902	. CONNECTOR, plug	1	
-12	AN3057-16	—	. CLAMP	1	
-13	NP137427M	—	. MARKER, cable	1	
-14	AN3106-28-16P	P5603	. CONNECTOR, plug	1	
-15	AN3057-16	—	. CLAMP	1	
-16	NP137427R	—	. MARKER, cable	1	
-17	AN3106-22-19P	P5605	. CONNECTOR, plug	1	
-18	AN3057-12	—	. CLAMP	1	
-19	NP137427T	—	. MARKER, cable	1	
-20	AN3106-28-16S	P5601	. CONNECTOR, plug	1	
-21	AN3057-16	—	. CLAMP	1	
-22	NP137427N	—	. MARKER, cable	1	
-23	AN3106-22-19P	P5604	. CONNECTOR, plug	1	
-24	AN3057-12	—	. CLAMP	1	
-25	NP137427S	—	. MARKER, cable	1	
-26	AN3106-28-16P	P5602	. CONNECTOR, plug	1	
-27	AN3057-16	—	. CLAMP	1	
-28	NP137427P	—	. MARKER, cable	1	
-29	AN3106-22-33S	P7001	. CONNECTOR, plug	1	
-30	NP137427W	—	. MARKER, cable	1	

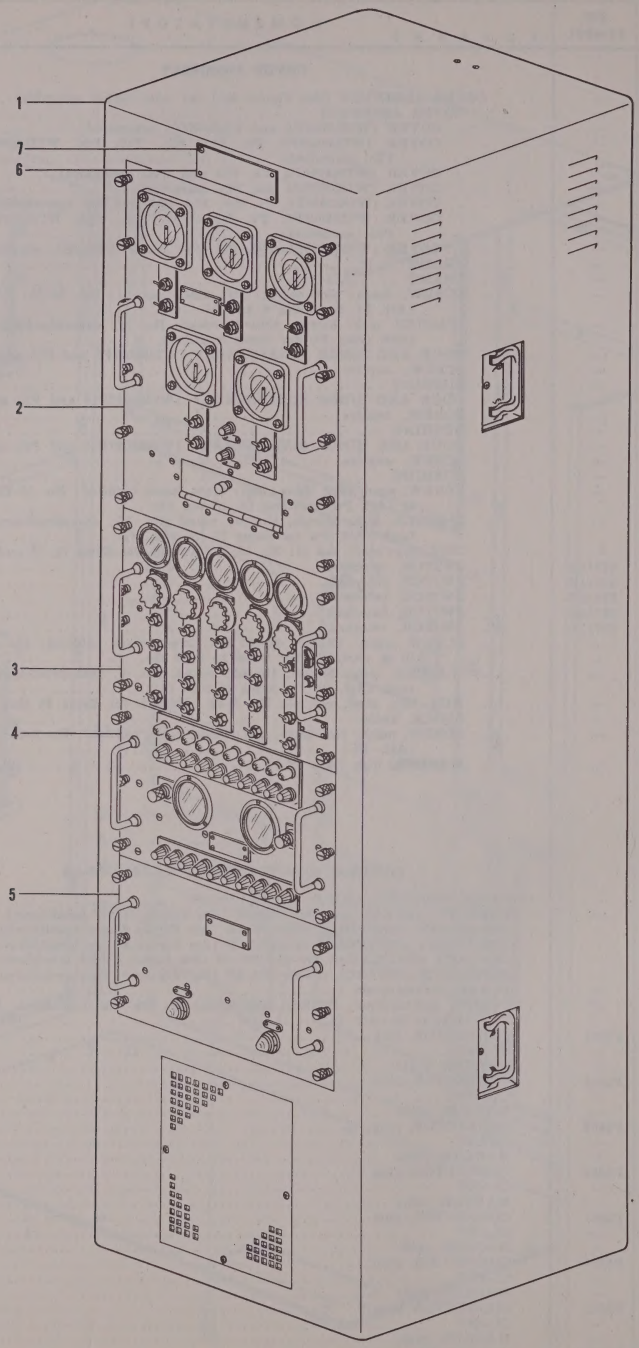

Figure 57. Transmitter-Receiver Control Assembly OA–102/CPS–6B, Front View (Sheet 1 of 2 sheets, Index Nos. 1 thru 7)

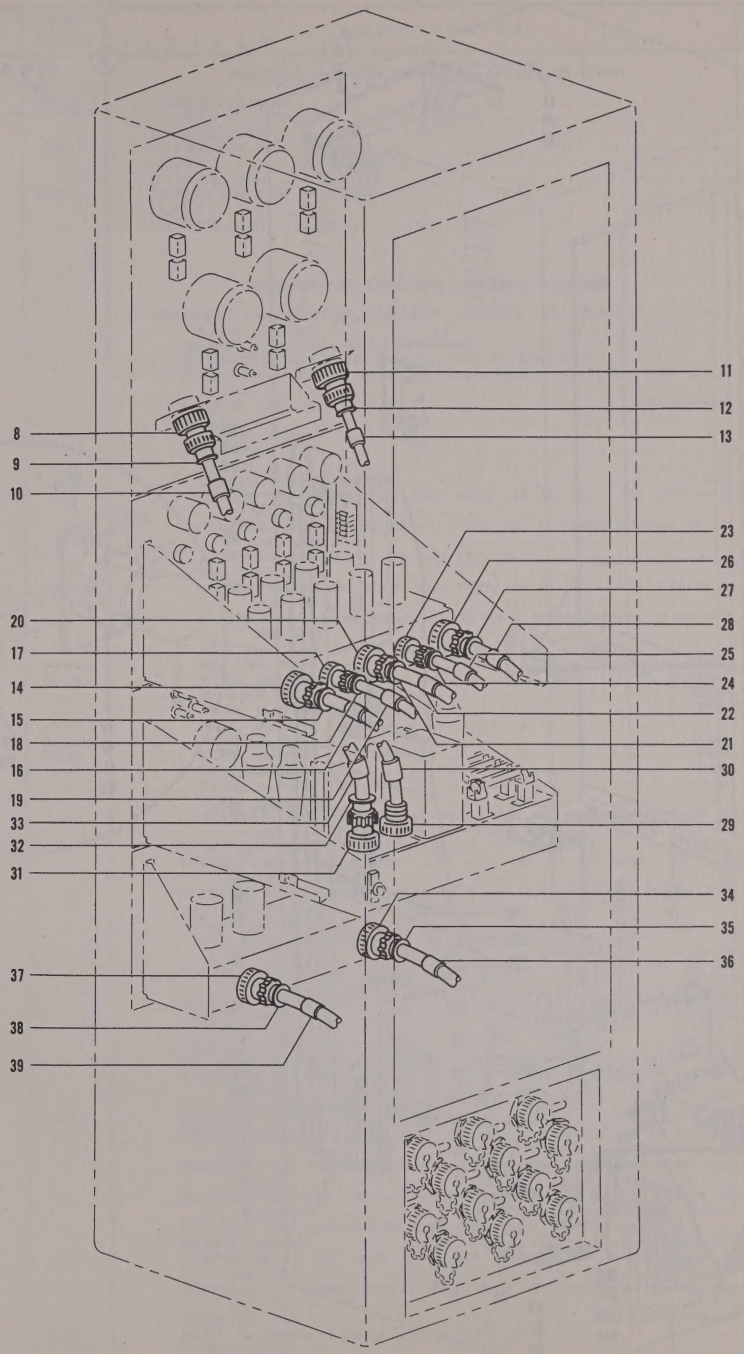

Figure 57. Transmitter-Receiver Control Assembly OA–102/CPS–6B, Rear View (Sheet 2 of 2 sheets, Index Nos. 8 thru 39)

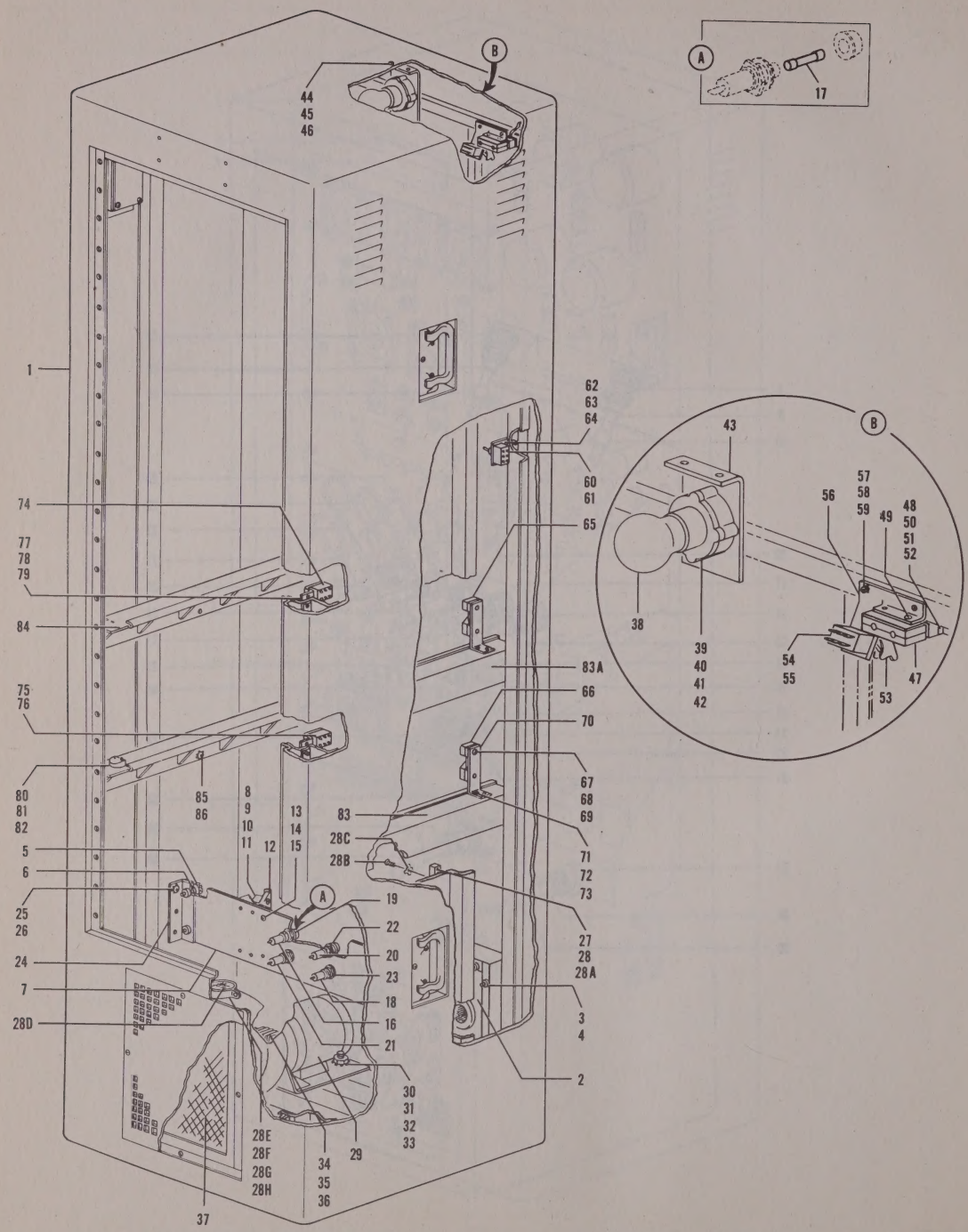

Figure 58. Transmitter-Receiver Control Cabinet

FIG. & INDEX NO.	PART NUMBER	REF SYMBOL	NOMENCLATURE 1 2 3 4 5 6 7	UNITS PER ASSY	APPLI-CATION
			CONTROL MONITOR GROUP OA–102/CPS–6B (Cont)		
57–31	AN3106–28–2P	P7002	. CONNECTOR, plug	1	
–32	AN3057–16	—	. CLAMP	1	
–33	NP137427X	—	. MARKER, cable	1	
–34	AN3106–28–2S	P9601	. CONNECTOR, plug	1	
–35	AN3057–16	—	. CLAMP	1	
–36	NP137427U	—	. MARKER, cable	1	
–37	AN3106–28–2P	P9602	. CONNECTOR, plug	1	
–38	AN3057–16	—	. CLAMP	1	
–39	NP137427V	—	. MARKER, cable	1	
			TRANSMITTER-RECEIVER CONTROL CABINET		
58–	ML7352790G1	—	. TRANSMITTER-RECEIVER CONTROL CABINET (See Figure 57–1 for next higher assembly)	Ref	
–1	ML7353027G2	—	. . CABINET (See Figure 59 for breakdown)	1	
–2	ML7666727G1	—	. . CONNECTOR ASSEMBLY (See Figure 60 for breakdown)	1	
–3	AN515B8R6	—	. . SCREW, mach: Phillips drive; RH; brass, black oxidized; No. 8–32; 3/8 in lg (Att. Pt.)	14	
–4	1908	—	. . WASHER, lock (Att. Pt.) (Shakeproof)	14	
	ML7770731G3	—	. . PANEL	1	
–5	K7126123P1	—	. . . SCREW, captive	4	
–6	K7128235P1	—	. . . BUSHING	4	
–7	M7481438P2	—	. . . PANEL	1	
–8	2679	J5510	. . . CONNECTOR ASSEMBLY (GE)	1	
–9	AN515–8–7	—	. . . SCREW, mach: slot drive; RH; steel, cad pl; No. 8–32; 7/16 in lg (Att. Pt.)	2	
–10	AN936B8B	—	. . . WASHER, lock: bronze, tinned; round, No. 8; shakeproof-type, tw ext teeth (Att. Pt.)	2	
–11	AN340–8	—	. . . NUT, hex: steel, cad pl; No. 8–32 (Att. Pt.)	2	
–12	M7481436P1	—	. . . BRACKET	1	
–13	AN515–6–7	—	. . . SCREW, mach: slot drive; RH; steel, cad pl; No. 6–32; 7/16 in lg (Att. Pt.)	6	
–14	AN936B6B	—	. . . WASHER, lock: bronze, tinned; round, No. 6; shakeproof-type, tw ext teeth (Att. Pt.)	6	
–15	AN340–6	—	. . . NUT, hex: steel, cad pl; No. 6–32 (Att. Pt.)	6	
–16	HCM–R	XF5502	. . . HOLDER, fuse (Buss)	1	
–17	ABS15	F5502	. . . FUSE, cartridge (Buss)	1	
–18	HCM–R	—	. . . HOLDER, fuse (Buss)	1	
	ABS15	—	. . . FUSE, cartridge (Ref item 17) (Buss)	1	
–19	K7126649P9	—	. . . DISK, indicator	2	
–20	HCM–R	XF5501	. . . HOLDER, fuse (Buss)	1	
	ABS5	F5501	. . . FUSE, cartridge (Ref item 17) (Buss)	1	
–21	HCM–R	—	. . . HOLDER, fuse (Buss)	1	
	ABS5	—	. . . FUSE, cartridge (Ref item 17) (Buss)	1	
–22	K7126649P7	—	. . . DISK, indicator	2	
–23	AN936A1016	—	. . . WASHER, lock: steel, cad pl; round, 5/8 in; shakeproof-type, tw int teeth (Att. Pt. for items 16, 18 thru 21)	4	
–24	No Number	—	. . MOUNTING, bracket (W7352790P10 and P11 assembled)	2	
–25	AN515–416R6	—	. . SCREW, mach: Phillips drive; RH; steel, cad pl; 1/4 in–20; 3/8 in lg (Att. Pt.)	6	
–26	AN936B416B	—	. . WASHER, lock: bronze, tinned; round, 1/4 in; shakeproof-type, tw ext teeth (Att. Pt.)	6	
–27	M7482858P3	—	. . BAR, bus	1	
–28	AN520–10R10	—	. . SCREW, mach: Phillips drive; RH; steel, cad pl; No. 10–32; 5/8 in lg (Att. Pt.)	2	
–28A	AN936B10B	—	. . WASHER, lock: bronze, tinned; round, No. 10; shakeproof-type, tw ext teeth (Att. Pt.)	2	
–28B	AN515–8R5	—	. . SCREW, mach: Phillips drive; RH; steel, cad pl; No. 8–32; 5/16 in lg	8	
–28C	AN936B8B	—	. . WASHER, lock: bronze, tinned; round, No. 8; shakeproof-type, tw ext teeth	8	
–28D	A7016993P1	—	. . SCREEN	1	
–28E	A7016992P1	—	. . CLAMP (Att. Pt.)	1	
–28F	AN515–6–8	—	. . SCREW, mach: slot drive; RH; steel, cad pl; No. 6–32; 1/2 in lg (Att. Pt.)	1	
–28G	AN936B6B	—	. . WASHER, lock: bronze, tinned; round, No. 6; shakeproof-type, tw ext teeth (Att. Pt.)	1	
–28H	AN340–6	—	. . NUT, hex: steel, cad pl; No. 6–32 (Att. Pt.)	1	
–29	P7771760P2	B5501	. . BLOWER (See Figure 61 for breakdown)	1	
–30	Coml	—	. . SCREW, mach: hex head; steel, cad pl; 5/16 in–18; 3/4 in lg (Att. Pt.) (Amer Screw)	4	
–31	AN936B516	—	. . WASHER, lock: steel, cad pl; round, 5/16 in; shakeproof-type, tw ext teeth (Att. Pt.)	4	
–32	Coml	—	. . WASHER, flat: steel, cad pl; round, 3/8 in ID, 7/8 in OD, 1/16 in thk (Wrought Washer)	4	
–33	AN340–516	—	. . NUT, hex: steel, cad pl; 5/16 in–18 (Att. Pt.)	4	
–34	MSX4–141	—	. . BOARD, terminal (Jones HB)	1	
–35	AN515–8–8	—	. . SCREW, mach: slot drive; RH; steel, cad pl; No. 8–32; 1/2 in lg (Att. Pt.)	4	
–36	AN936B8B	—	. . WASHER, lock: bronze, tinned; round, No. 8; shakeproof-type, tw ext teeth (Att. Pt.)	4	
–37	P1A	—	. . CLEANER, air (Air-Maze)	1	
–38	Coml	I5501	. . LAMP, incandescent: Mazda 50A/RS, 110 v, 50 w	1	
–39	K7118447P1	XI5501	. . LAMPHOLDER	1	
–40	AN515B8R14	—	. . SCREW, mach: Phillips drive; RH; brass, black oxidized; No. 8–32; 7/8 in lg (Att. Pt.)	2	

FIG. & INDEX NO.	PART NUMBER	REF SYMBOL	NOMENCLATURE 1 2 3 4 5 6 7	UNITS PER ASSY	APPLI-CATION
			TRANSMITTER-RECEIVER CONTROL CABINET (Cont)		
58–41	AN936A8B	—	WASHER, lock: bronze, tinned; round, No. 8; shakeproof-type, tw int teeth (Att. Pt.)	2	
–42	AN340–8	—	NUT, hex: steel, cad pl; No. 8–32 (Att. Pt.)	2	
–43	K7003371P1	—	BRACKET	1	
–44	AN515B8R8	—	SCREW, mach: Phillips drive; RH; brass, black oxidized; No. 8–32; 1/2 in lg (Att. Pt.)	2	
–45	AN936A8B	—	WASHER, lock: bronze, tinned; round, No. 8; shakeproof-type, tw int teeth (Att. Pt.)	2	
–46	AN340–8	—	NUT, hex: steel, cad pl; No. 8–32 (Att. Pt.)	2	
–47	ML7460330G4	S5503	SWITCH, interlock	1	
–48	K7128234	—	PLATE, spacer	1	
–49	AN515–6R18	—	SCREW, mach: Phillips drive; RH; steel, cad pl; No. 6–32; 1-1/8 in lg (Att. Pt. for item 47)	2	
–50	AN515B6R12	—	SCREW, mach: Phillips drive; RH; brass, black oxidized; No. 6–32; 3/4 in lg (Att. Pt. for items 47 and 48)	2	
–51	AN936B6B	—	WASHER, lock: bronze, tinned; round, No. 6; shakeproof-type, tw ext teeth (Att. Pt. for items 47 and 48)	4	
–52	AN340–6	—	NUT, hex: steel, cad pl; No. 6–32 (Att. Pt. for items 47 and 48)	4	
–53	AN3028–1	—	GUARD	1	
–54	ST22N	S5502	SWITCH, toggle	1	
–55	1222–1	—	WASHER, lock (Att. Pt. for items 53 and 54) (Shakeproof)	1	
–56	K7128232P1	—	BRACKET	1	
–57	AN515–6R7	—	SCREW, mach: Phillips drive; RH; steel, cad pl; No. 6–32; 7/16 in lg (Att. Pt.)	2	
–58	AN936B6B	—	WASHER, lock: bronze, tinned; round, No. 6; shakeproof-type, tw ext teeth (Att. Pt.)	2	
–59	AN340–6	—	NUT, hex: steel, cad pl; No. 6–32 (Att. Pt.)	2	
–60	ST22N	S5501	SWITCH, toggle	1	
–61	1222–1	—	WASHER, lock (Att. Pt.) (Shakeproof)	1	
–62	K7128233P1	—	BRACKET	1	
–63	AN515–8R5	—	SCREW, mach: Phillips drive; RH; steel, cad pl; No. 8–32; 5/16 in lg (Att. Pt.)	2	
–64	AN936A8B	—	WASHER, lock: bronze, tinned; round, No. 8; shakeproof-type, tw int teeth (Att. Pt.)	2	
–65	ML7460330G2	S5507A	SWITCH, interlock	1	
–66	ML7460330G2	S5505A	SWITCH, interlock	1	
–67	AN515–6R18	—	SCREW, mach: Phillips drive; RH; steel, cad pl; No. 6–32; 1-1/8 in lg (Att. Pt. for items 65 and 66)	4	
–68	AN936B6B	—	WASHER, lock: bronze, tinned; round, No. 6; shakeproof-type, tw ext teeth (Att. Pt. for items 65 and 66)	4	
–69	AN340–6	—	NUT, hex: steel, cad pl; No. 6–32 (Att. Pt. for items 65 and 66)	4	
–70	K7128244P1	—	BRACKET	2	
–71	AN520–10R8	—	SCREW, mach: Phillips drive; RH; steel, cad pl; No. 10–32; 1/2 in lg (Att. Pt.)	4	
–72	AN936B10B	—	WASHER, lock: bronze, tinned; round, No. 10; shakeproof-type, tw ext teeth (Att. Pt.)	4	
–73	AN345–10	—	NUT, hex: steel, cad pl; No. 10–32 (Att. Pt.)	4	
–74	ST22N	S5504	SWITCH, toggle	1	
–75	ST22N	S5506	SWITCH, toggle	1	
–76	1222–1	—	WASHER, lock (Att. Pt. for items 74 and 75) (Shakeproof)	2	
–77	K7128243P1	—	BRACKET	2	
–78	AN520–10R8	—	SCREW, mach: Phillips drive; RH; steel, cad pl; No. 10–32; 1/2 in lg (Att. Pt.)	4	
–79	AN936B10B	—	WASHER, lock: bronze, tinned; round, No. 10; shakeproof-type, tw ext teeth (Att. Pt.)	4	
–80	K7002917P1	—	BLOCK, guide	4	
–81	AN520–10R8	—	SCREW, mach: Phillips drive; RH; steel, cad pl; No. 10–32; 1/2 in lg (Att. Pt.)	8	
–82	AN936B10B	—	WASHER, lock: bronze, tinned; round, No. 10; shakeproof-type, tw ext teeth (Att. Pt.)	8	
–83	P7771820P2	—	GUIDE, drawer	1	
–83A	P7771820P3	—	GUIDE, drawer	1	
–84	ML7771770G1	—	GUIDE, drawer	2	
–85	AN515–416R8	—	SCREW, mach: Phillips drive; RH; steel, cad pl; 1/4 in–20; 1/2 in lg (Att. Pt. for items 83 and 84)	28	
-86	AN936B416B	—	WASHER, lock: bronze, tinned; round, 1/4 in; shakeproof-type, tw ext teeth (Att. Pt. for items 83 and 84)	28	
			CABINET		
59–	ML7353027G2	—	CABINET (See Figures 58–1 and 81–1 for next higher assembly)	Ref	
–1	No Number	—	FRAME (W7353027P5 thru P14, P16, P17, P22, P23, P24, P33, P34, P35, P36, P39, P41, P42, P43, P60, P62, P63, P75, P80, P81 and P88, assembled)	1	
–2	58–381BE	—	HINGE (Natl Lock)	1	
–3	AN515–8R6	—	SCREW, mach: Phillips drive; RH; steel, cad pl; No. 8–32; 3/8 in lg (Att. Pt.)	26	
–4	AN936B8	—	WASHER, lock: steel, cad pl; round, No. 8, shakeproof-type, tw ext teeth (Att. Pt.)	26	
–5	AN340–8	—	NUT, hex: steel, cad pl; No. 8–32 (Att. Pt.)	26	

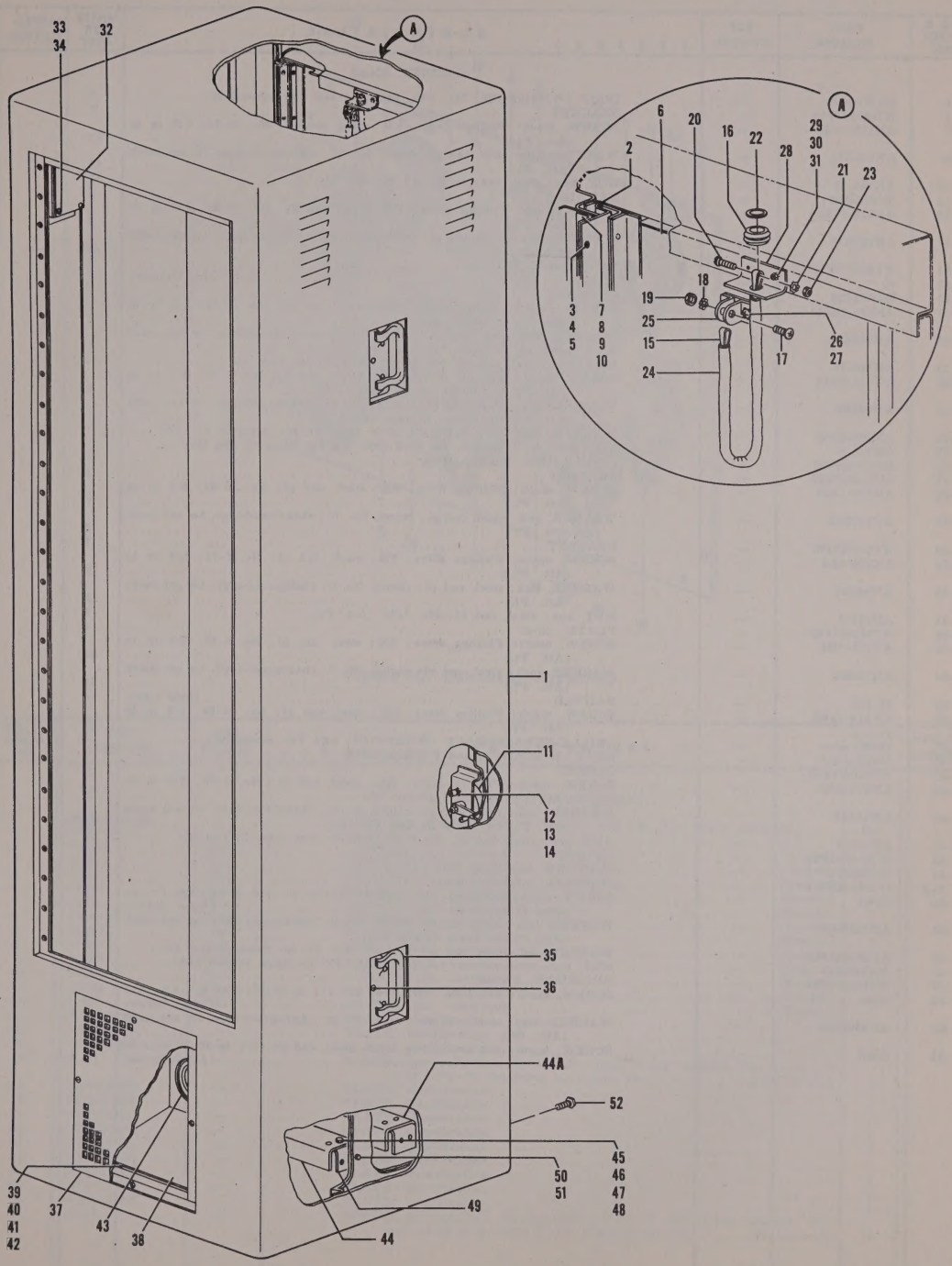

Figure 59. Cabinet

FIG. & INDEX NO.	PART NUMBER	REF SYMBOL	NOMENCLATURE 1 2 3 4 5 6 7	UNITS PER ASSY	APPLI-CATION
			CABINET (Cont)		
59–6	No Number	—	. . . DOOR (W7353027P20, P21, P30, P61, P68 and P93, assembled)	1	
–7	W7353027P69	—	. . . BRACKET	1	
–8	AN510–10R8	—	. . . SCREW, mach: Phillips drive; FH; steel, cad pl; No. 10–32; 1/2 in lg (Att. Pt.)	12	
–9	AN936B10	—	. . . WASHER, lock: steel, cad pl; round, No. 10; shakeproof-type, tw ext teeth (Att. Pt.)	12	
–10	AN345–10	—	. . . NUT, hex: steel, cad pl; No. 10–32 (Att. Pt.)	12	
–11	M7483488P1	—	. . . HANDLE	2	
–12	AN510–10R10	—	. . . SCREW, mach: Phillips drive; FH; steel, cad pl; No. 10–32; 5/8 in lg (Att. Pt.)	4	
–13	AN936B10	—	. . . WASHER, lock: steel, cad pl; round, No. 10; shakeproof-type, tw ext teeth (Att. Pt.)	AR	
–14	W7353027P72	—	. . . NUT, round (Att. Pt.)	4	
–15	45	—	. . . CHAIN (Corbin Cabinet)	1	
–16	M2R53P22	—	. . . GROMMET	1	
–17	AN520–10R10	—	. . . SCREW, mach: Phillips drive; RH; steel, cad pl; No. 10–32; 5/8 in lg (Att. Pt. for item 15)	1	
–18	AN936B10	—	. . . WASHER, lock: steel, cad pl; round, No. 10; shakeproof-type, tw ext teeth (Att. Pt. for item 15)	1	
–19	AN345–10	—	. . . NUT, hex: steel, cad pl; No. 10–32 (Att. Pt. for item 15)	1	
–20	AN515–8R10	—	. . . SCREW, mach: Phillips drive; RH; steel, cad pl; No. 8–32; 5/8 in lg (Att. Pt. for items 15 and 16)	1	
–21	AN936B8	—	. . . WASHER, lock: steel, cad pl; round, No. 8; shakeproof-type, tw ext teeth (Att. Pt. for items 15 and 16)	1	
–22	AN960–516L	—	. . . WASHER, flat: steel, cad pl; 5/16 in (Att. Pt. for items 15 and 16)	1	
–23	AN340–8	—	. . . NUT, hex: steel, cad pl; No. 8–32 (Att. Pt. for items 15 and 16)	1	
–24	M7472368P22	—	. . . INSULATION, flexible sleeve	1	
–25	W7353027P84	—	. . . BRACKET	1	
–26	AN520–10R6	—	. . . SCREW, mach: Phillips drive; RH; steel, cad pl; No. 10–32; 3/8 in lg (Att. Pt.)	2	
–27	AN936B10	—	. . . WASHER, lock: steel, cad pl; round, No. 10; shakeproof-type, tw ext teeth (Att. Pt.)	2	
–28	W7353027P83	—	. . . BRACKET	1	
–29	AN505–8R6	—	. . . SCREW, mach: Phillips drive; FH; steel, cad pl; No. 8–32; 3/8 in lg (Att. Pt.)	2	
–30	AN936B8	—	. . . WASHER, lock: steel, cad pl; round, No. 8; shakeproof-type, tw ext teeth (Att. Pt.)	2	
–31	AN340–8	—	. . . NUT, hex: steel, cad pl; No. 8–32 (Att. Pt.)	2	
–32	W7353027P82	—	. . . PLATE, cover	4	
–33	AN515–6R6	—	. . . SCREW, mach: Phillips drive; RH; steel, cad pl; No. 6–32; 3/8 in lg (Att. Pt.)	24	
–34	AN936B6	—	. . . WASHER, lock: steel, cad pl; round, No. 6; shakeproof-type, tw ext teeth (Att. Pt.)	24	
–35	61–108	—	. . . HANDLE (Natl Lock)	4	
–36	AN510–10R8	—	. . . SCREW, mach: Phillips drive; FH; steel, cad pl; No. 10–32; 1/2 in lg (Att. Pt.)	12	
–37	No Number	—	. . . GRILLE SUBASSEMBLY (W7353027P31 and P40 assembled)	1	
–38	No Number	—	. . . DUCT (W7353027P74 and P76 assembled)	1	
–39	W7353027P64	—	. . . GASKET	1	
–40	AN515–6R6	—	. . . SCREW, mach: Phillips drive; RH; steel, cad pl; No. 6–32; 3/8 in lg (Att. Pt. for items 38 and 39)	16	
–41	AN936B6	—	. . . WASHER, lock: steel, cad pl; round, No. 6; shakeproof-type, tw ext teeth (Att. Pt. for items 38 and 39)	16	
–42	AN340–6	—	. . . NUT, hex: steel, cad pl; No. 6–32 (Att. Pt. for items 38 and 39)	16	
–43	W7353027P65	—	. . . GASKET	1	
–44	W7353027P77	—	. . . SUPPORT, mounting base	2	
–44A	W7353027P79	—	. . . SUPPORT, mounting base	1	
–45	Coml	—	. . . SCREW, mach: hex head; steel, cad pl; 1/4 in–20; 5/8 in lg (Att. Pt. for items 44 and 44A) (Amer Screw)	8	
–46	AN936B416	—	. . . WASHER, lock: steel, cad pl; round, 1/4 in; shakeproof-type, tw ext teeth (Att. Pt. for items 44 and 44A)	8	
–47	AN960–516L	—	. . . WASHER, flat: steel, cad pl; 5/16 in (Att. Pt. for items 44 and 44A)	8	
–48	AN340–416	—	. . . NUT, hex: steel, cad pl; 1/4 in–20 (Att. Pt. for items 44 and 44A)	8	
–49	W7353027P78	—	. . . MOUNTING, bracket	4	
–50	Coml	—	. . . SCREW, mach: hex head; steel, cad pl; 1/4 in–20; 5/8 in lg (Att. Pt.) (Amer Screw)	8	
–51	AN936B416	—	. . . WASHER, lock: steel, cad pl; round, 1/4 in; shakeproof-type, tw ext teeth (Att. Pt.)	8	
–52	Coml	—	. . . SCREW, mach: slot drive; hex head; steel, cad pl; 1/4 in–20; 5/8 in lg (Amer Screw)	4	

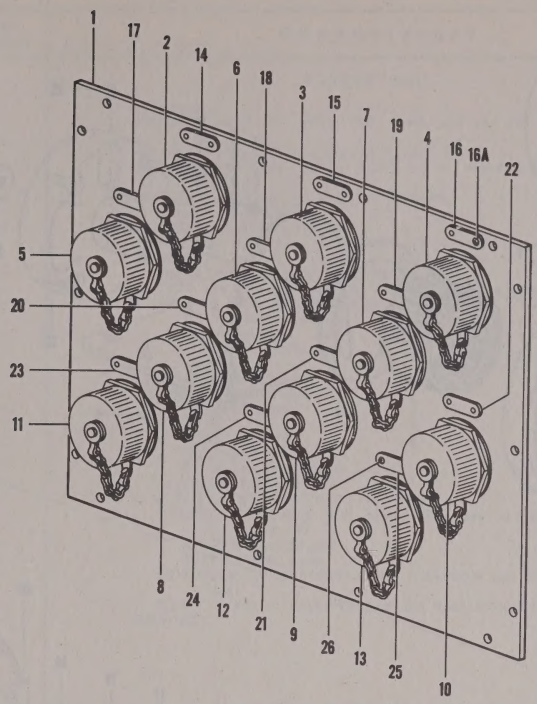

Figure 60. Connector Assembly

FIG. & INDEX NO.	PART NUMBER	REF SYMBOL	1 2 3 4 5 6 7 NOMENCLATURE	UNITS PER ASSY	APPLI-CATION
			CONNECTOR ASSEMBLY		
60–	ML7666727G1	—	CONNECTOR ASSEMBLY (See Figure 58–2 for next higher assembly)	Ref	
–1	P7771831P1	—	PANEL	1	
–2	C1128	J5501	CONNECTOR, receptacle (Buggie)	1	
–3	C1128	J5502	CONNECTOR, receptacle (Buggie)	1	
–4	C1145	J5503	CONNECTOR, receptacle (Buggie)	1	
–5	C1128	J5504	CONNECTOR, receptacle (Buggie)	1	
–6	C1145	J5505	CONNECTOR, receptacle (Buggie)	1	
–7	C1143	J5506	CONNECTOR, receptacle (Buggie)	1	
–8	C1143	J5507	CONNECTOR, receptacle (Buggie)	1	
–9	C1126	J5509	CONNECTOR, receptacle (Buggie)	1	
–10	C1143	J5508	CONNECTOR, receptacle (Buggie)	1	
–11	C1126	J5511	CONNECTOR, receptacle (Buggie)	1	
–12	C1143	J5512	CONNECTOR, receptacle (Buggie)	1	
–13	C1126	J5513	CONNECTOR, receptacle (Buggie)	1	
–14	NP125948A	—	PLATE, identification	1	
–15	NP125948B	—	PLATE, identification	1	
–16	NP125948C	—	PLATE, identification	1	
–16A	Coml	—	SCREW, mach: Phillips drive; RH; brass, black oxidized; No. 4–40; 1/8 in lg (Att. Pt. for items 14, 15 and 16) (Amer Screw)	1	
–17	NP125948D	—	PLATE, identification	6	
–18	NP125948E	—	PLATE, identification	1	
–19	NP125948F	—	PLATE, identification	1	
–20	NP125948G	—	PLATE, identification	1	
–21	NP125948J	—	PLATE, identification	1	
–22	NP125948H	—	PLATE, identification	1	
–23	NP125948K	—	PLATE, identification	1	
–24	NP125948M	—	PLATE, identification	1	
–25	NP140024H	—	PLATE, identification	1	
–26	Coml	—	SCREW, self-tapping: Phillips drive; Bind H; SS, black oxidized; No. 4–40; 3/16 in lg (Att. Pt. for items 17 thru 25) (Shakeproof)	18	

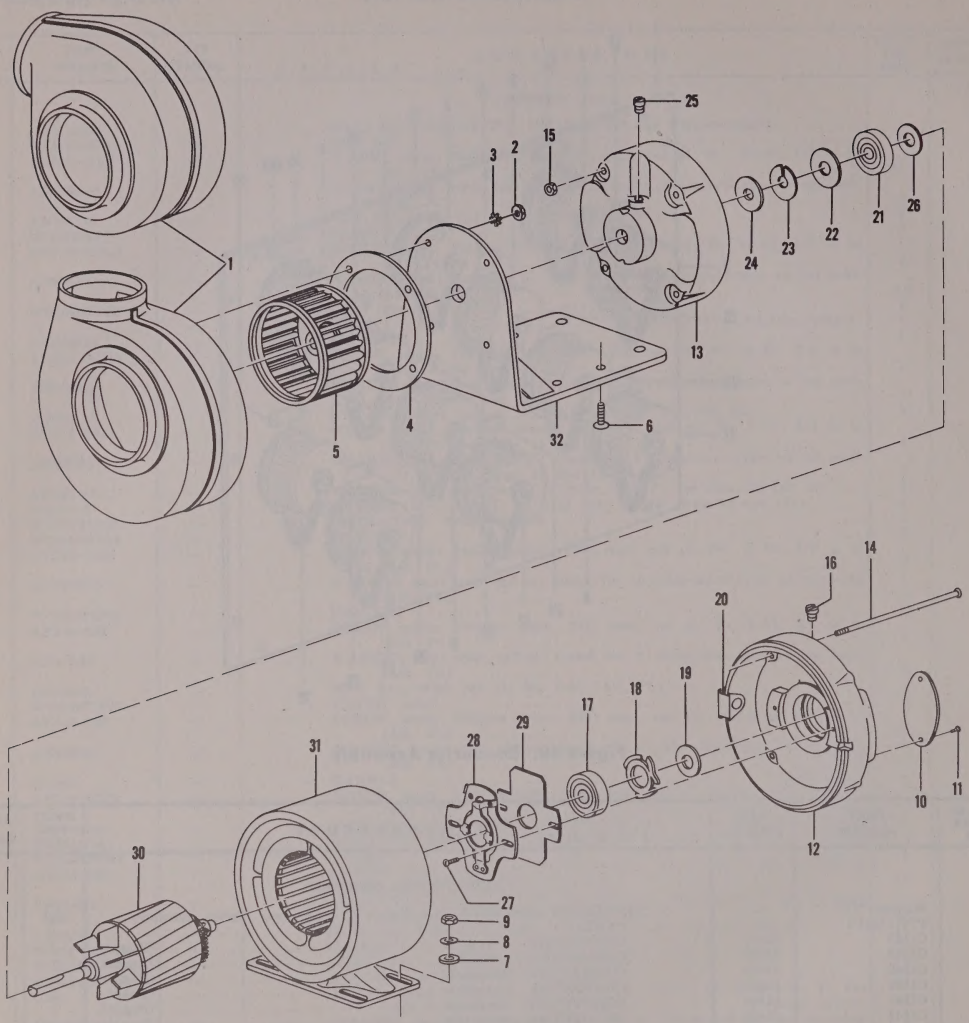

Figure 61. Blower

FIG. & INDEX NO.	PART NUMBER	REF SYMBOL	1 2 3 4 5 6 7 NOMENCLATURE	UNITS PER ASSY	APPLI-CATION
			BLOWER		
61–	P7771760P2	B5501	. . BLOWER (See Figure 58–29 for next higher assembly)	Ref	
61–	P7771760P2	B5701	. . BLOWER (See Figure 81–6 for next higher assembly)	Ref	
61–	P7771760P6	B3101	. . BLOWER (See Figure 90–158 for next higher assembly)	Ref	
			Note: Figure 61 shows the impeller housing in two positions: one for P7771760P2 and the other for P7771760P6. The housing shown in the line of explosion is for P7771760P2. The alternate view (shown in a raised position in the illustration) is rotated for its position in P7771760P6.		
–1	26–SA–36	—	. . . HOUSING (Amer Blower)	1	
–2	AN340–8	—	. . . NUT, hex: steel, cad pl; No. 8–32 (Att. Pt.)	4	
–3	AN936B8	—	. . . WASHER, lock: steel, cad pl; round, No. 8, shakeproof-type, tw ext teeth (Att. Pt.)	4	
–4	H85065P7	—	. . . GASKET (Amer Blower)	1	
–5	57–PP–144	—	. . . IMPELLER, centrifugal (Amer Blower)	1	

FIG. & INDEX NO.	PART NUMBER	REF SYMBOL	NOMENCLATURE 1 2 3 4 5 6 7	UNITS PER ASSY	APPLI-CATION
			BLOWER (Cont)		
61–	5KH35HC330	—	. . . MOTOR, AC ....(GE)	1	
–6	AN505–416–12	—	. . . SCREW, mach: slot drive; FH; steel, cad pl; 1/4 in–20; 3/4 in lg (Att. Pt.)	4	
–7	AN960–416	—	. . . WASHER, flat: steel, cad pl; 1/4 in (Att. Pt.)	4	
–8	AN936B416	—	. . . WASHER, lock: steel, cad pl; round, 1/4 in; shakeproof-type, tw ext teeth (Att. Pt.)	4	
–9	AN340–416	—	. . . NUT, hex: steel, cad pl; 1/4 in–20 (Att. Pt.)	4	
–10	NP59441B	—	. . . . PLATE, identification ....(GE)	1	
–11	K5828716AP10	—	. . . . PIN, escutcheon (Att. Pt.) ....(GE)	2	
–12	M5842289DEP1	—	. . . . SHIELD, end ....(GE)	1	
–13	M5842289DGP1	—	. . . . SHIELD, end ....(GE)	1	
–14	K5855034ABP58	—	. . . . BOLT, mach (Att. Pt. for items 12 and 13) ....(GE)	4	
–15	AN340–8	—	. . . . NUT, hex: steel, cad pl; No. 8–32 (Att. Pt. for items 12 and 13)	4	
	K5863652BLG4	—	. . . . SHIELD SUBASSEMBLY, end ....(GE)	1	
–16	K5828721AAP2	—	. . . . . PLUG, machine thread ....(GE)	1	
–17	K5852922ADP8	—	. . . . . BEARING, ball ....(GE)	1	
–18	K5863593AAP1	—	. . . . . WASHER, spring ....(GE)	1	
–19	K5863310AA	—	. . . . . SHIM ....(GE)	AR	
–20	K5828852AAP1	—	. . . . . GROMMET ....(GE)	1	
	K5863653AMG3	—	. . . . SHIELD SUBASSEMBLY, end ....(GE)	1	
–21	K5852922ADP8	—	. . . . . BEARING, ball ....(GE)	1	
–22	K5863310AA	—	. . . . . SHIM ....(GE)	AR	
–23	K5852919AAP1	—	. . . . . WASHER, "C" ....(GE)	1	
–24	K5852918AAP1	—	. . . . . PACKING ....(GE)	1	
–25	K5828721AAP2	—	. . . . . PLUG, machine thread ....(GE)	1	
–26	K8701406AA	—	. . . . WASHER, extruded ....(GE)	1	
	K5863525AAG3	—	. . . . SWITCH SUBASSEMBLY, centrifugal ....(GE)	1	
–27	AN504–6–5	—	. . . . SCREW, self-tapping: slot drive; RH; steel, cad pl; No. 6–32; 5/16 in lg (Att. Pt.)	2	
–28	K5863525AA	—	. . . . . SWITCH, centrifugal ....(GE)	1	
–29	K5863526AA1	—	. . . . . INSULATOR, plate ....(GE)	1	
–30	No Number	—	. . . . ROTOR, motor (K5863578AAG7, K5861465B and K8719966AA assembled) ....(GE)	1	
–31	No Number	—	. . . . . STATOR, motor (K5863662AAG6 and K5861505AAG11 assembled). (GE)	1	
–32	H85065P3	—	. . . BRACKET ....(Amer Blower)	1	
			RADAR SET CONTROL C–553/CPS–6B		
62–	ML7353902G1	—	. RADAR SET CONTROL C–553/CPS–6B (See Figure 57–2 for next higher assembly)	Ref	
–1	K7126123P1	—	. . SCREW, captive	12	
–2	K7128235P2	—	. . BUSHING	12	
–3	P7771802P1	—	. . PANEL	1	
–4	AN3102–28–12P	J2901	. . CONNECTOR, receptacle	1	
–5	AN515B4–7	—	. . SCREW, mach: slot drive; RH; brass, black oxidized; No. 4–40; 7/16 in lg (Att. Pt.)	4	
–6	AN936B4	—	. . WASHER, lock: steel, cad pl; round, No. 4; shakeproof-type, tw ext teeth (Att. Pt.)	4	
–7	AN340–4	—	. . NUT, hex: steel, cad pl; No. 4–40 (Att. Pt.)	4	
–8	M7481487P1	—	. . BRACKET	1	
–9	AN520–10–8	—	. . SCREW, mach: slot drive; RH; steel, cad pl; No. 10–32; 1/2 in lg (Att. Pt.)	2	
–10	AN936B10B	—	. . WASHER, lock: bronze, tinned; round, No. 10; shakeproof-type, tw ext teeth (Att. Pt.)	2	
–11	AN345–10	—	. . NUT, hex: steel, cad pl; No. 10–32 (Att. Pt.)	2	
–12	AN3102–28–16P	J2902	. . CONNECTOR, receptacle	1	
–13	K7861852P1	—	. . TERMINAL, lug	1	
–14	AN515B4–7	—	. . SCREW, mach: slot drive; RH; brass, black oxidized; No. 4–40; 7/16 in lg (Att. Pt. for items 12 and 13)	4	
–15	AN936B4	—	. . WASHER, lock: steel, cad pl; round, No. 4; shakeproof-type, tw ext teeth (Att. Pt. for items 12 and 13)	4	
–16	AN340–4	—	. . NUT, hex: steel, cad pl; No. 4–40 (Att. Pt. for items 12 and 13)	4	
–17	M7481487P1	—	. . BRACKET	1	
–18	AN520–10–8	—	. . SCREW, mach: slot drive; RH; steel, cad pl; No. 10–32; 1/2 in lg (Att. Pt.)	2	
–19	AN936B10B	—	. . WASHER, lock: bronze, tinned; round, No. 10; shakeproof-type, tw ext teeth (Att. Pt.)	2	
–20	AN345–10	—	. . NUT, hex: steel, cad pl; No. 10–32 (Att. Pt.)	2	
–21	K7128214P1	—	. . HINGE	1	
–22	AN515B8–6	—	. . SCREW, mach: slot drive; RH; brass, black oxidized; No. 8–32; 3/8 in lg (Att. Pt.)	5	
–23	AN936B8	—	. . WASHER, lock: steel, cad pl; round, No. 8; shakeproof-type, tw ext teeth (Att. Pt.)	5	
–24	AN340–8	—	. . NUT, hex: steel, cad pl; No. 8–32 (Att. Pt.)	5	
–25	ML7481902G1	—	. . DRAWER	1	
–26	AN505–8–6	—	. . SCREW, mach: slot drive; FH; steel, cad pl; No. 8–32; 3/8 in lg (Att. Pt.)	5	
–27	AN936B8	—	. . WASHER, lock: steel, cad pl; round, No. 8; shakeproof-type, tw ext teeth (Att. Pt.)	5	
–28	AN340–8	—	. . NUT, hex: steel, cad pl; No. 8–32 (Att. Pt.)	5	
–29	K7128212P1	—	. . GRIP, handle	1	

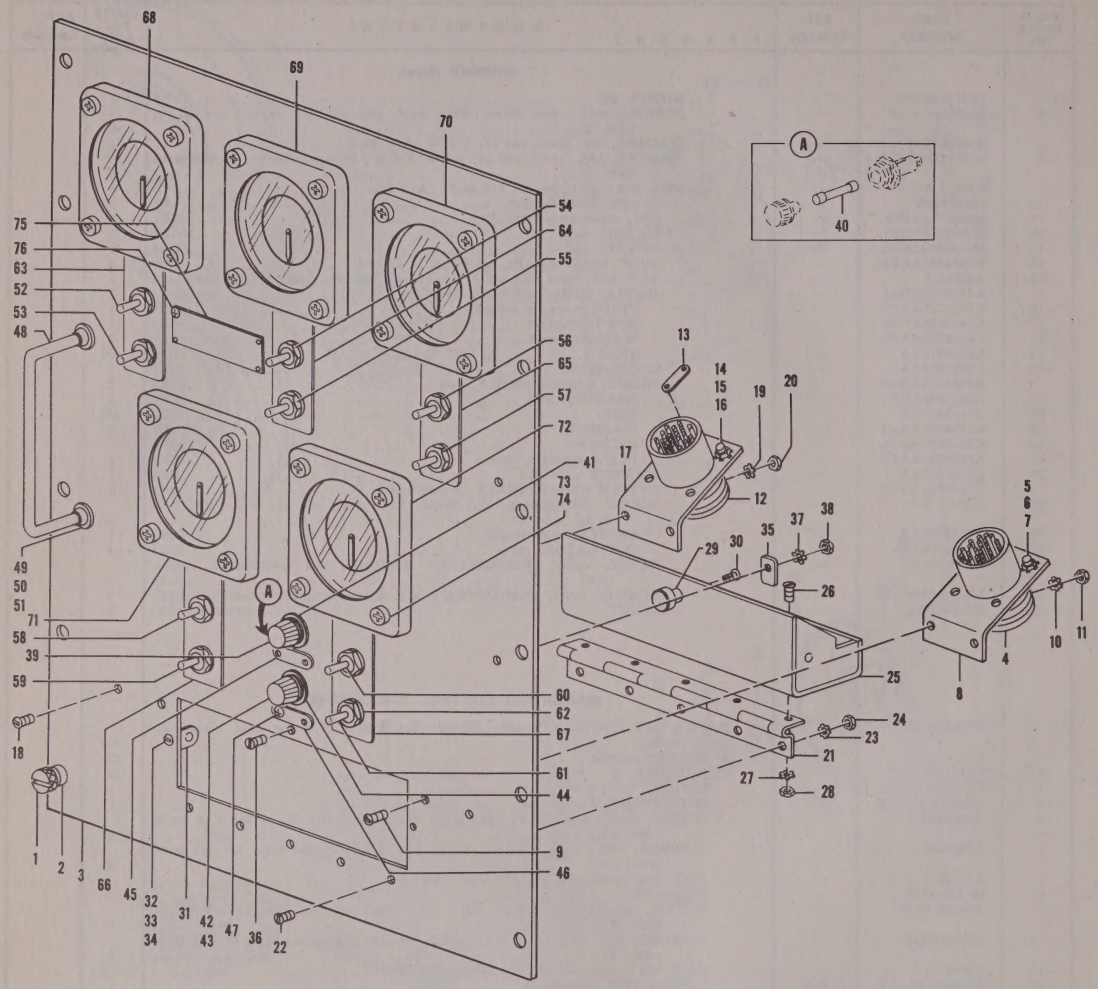

Figure 62. Radar Set Control C–553/CPS–6B

FIG. & INDEX NO.	PART NUMBER	REF SYMBOL	1 2 3 4 5 6 7 NOMENCLATURE	UNITS PER ASSY	APPLI-CATION
			RADAR SET CONTROL C–553/CPS–6B (Cont)		
62–30	AN505B8–5	—	. . SCREW, mach: slot drive; FH; brass, black oxidized; No. 8–32; 5/16 in lg (Att. Pt.)	1	
–31	K7128211P1	—	. . SPRING	2	
–32	AN515–6–5	—	. . SCREW, mach: slot drive; RH; steel, cad pl; No. 6–32; 5/16 in lg (Att. Pt.)	2	
–33	AN936B6B	—	. . WASHER, lock: bronze, tinned; round, No. 6; shakeproof-type, tw ext teeth (Att. Pt.)	2	
–34	AN340–6	—	. . NUT, hex: steel, cad pl; No. 6–32 (Att. Pt.)	2	
–35	K7128213P1	—	. . PLATE, stop	1	
–36	AN515–8–7	—	. . SCREW, mach: slot drive; RH; steel, cad pl; No. 8–32; 7/16 in lg (Att. Pt.)	1	
–37	AN936B8	—	. . WASHER, lock: steel, cad pl; round, No. 8; shakeproof-type, tw ext teeth (Att. Pt.)	1	

FIG. & INDEX NO.	PART NUMBER	REF SYMBOL	NOMENCLATURE 1 2 3 4 5 6 7	UNITS PER ASSY	APPLI-CATION
			RADAR SET CONTROL C–553/CPS–6B (Cont)		
62–38	AN340–8	—	. . NUT, hex: steel, cad pl; No. 8–32 (Att. Pt.)	1	
–39	HCM–R	XF2901	. . HOLDER, fuse (Buss)	1	
–40	ABS5	F2901	. . FUSE, cartridge (Buss)	1	
–41	K7126649P7	—	. . DISK, indicator	1	
–42	HCM–R	—	. . HOLDER, fuse (Buss)	1	
–43	1228–2	—	. . WASHER, lock (Att. Pt. for items 39 and 42) (Shakeproof)	2	
	ABS5	—	. . FUSE, cartridge (Ref item 40) (Buss)	1	
–44	K7126649P7	—	. . DISK, indicator	1	
–45	NP125113F1	—	. . PLATE, identification	1	
–46	NP137461A	—	. . PLATE, identification	1	
–47	Coml	—	. . SCREW, self-tapping: Phillips drive; Bind H; SS, black oxidized; No. 4–40; 3/16 in lg (Att. Pt. for items 45 and 46) (Shakeproof)	4	
–48	K7002870P1	—	. . HANDLE	2	
–49	K7002869P1	—	. . WASHER, extruded	4	
–50	AN345–10	—	. . NUT, hexagon: steel, cad pl; No. 10–32 (Att. Pt.)	4	
–51	AN936B10	—	. . WASHER, lock: steel, cad pl; round, No. 10; shakeproof-type, tw ext teeth (Att. Pt.)	4	
–52	ST52S	S2905	. . SWITCH, toggle	1	
–53	ST52S	S2906	. . SWITCH, toggle	1	
–54	ST52S	S2904	. . SWITCH, toggle	1	
–55	ST52S	S2907	. . SWITCH, toggle	1	
–56	ST52S	S2903	. . SWITCH, toggle	1	
–57	ST52S	S2908	. . SWITCH, toggle	1	
–58	ST52S	S2902	. . SWITCH, toggle	1	
–59	ST52S	S2909	. . SWITCH, toggle	1	
–60	ST52S	S2901	. . SWITCH, toggle	1	
–61	ST52S	S2910	. . SWITCH, toggle	1	
–62	1222–1	—	. . WASHER, lock (Att. Pt. for items 52 thru 61) (Shakeproof)	10	
–63	NP125518C	—	. . PLATE, identification	1	
–64	NP125553A	—	. . PLATE, identification	1	
–65	NP125553B	—	. . PLATE, identification	1	
–66	NP125518B	—	. . PLATE, identification	1	
–67	NP125518A	—	. . PLATE, identification	1	
–68	2–550	I2905	. . METER, frequency indicator (GE)	1	
–69	2–550	I2904	. . METER, frequency indicator (GE)	1	
–70	2–550	I2903	. . METER, frequency indicator (GE)	1	
–71	2–550	I2902	. . METER, frequency indicator (GE)	1	
–72	2–550	I2901	. . METER, frequency indicator (GE)	1	
–73	AN345–416	—	. . NUT, hex: steel, cad pl; 1/4 in–28 (Att. Pt. for items 68 thru 72)	20	
–74	AN936B416	—	. . WASHER, lock: steel, cad pl; round, 1/4 in; shakeproof-type, tw ext teeth (Att. Pt. for items 68 thru 72)	20	
–75	NP136329A	—	. . PLATE, identification	1	
–76	Coml	—	. . SCREW, self-tapping: Phillips drive; Bind H; SS, black oxidized; No. 4–40; 3/16 in lg (Att. Pt.) (Shakeproof)	4	
			RADAR SET CONTROL C–554/CPS–6B		
63–	ML7352666G1	—	. RADAR SET CONTROL C–554/CPS–6B (See Figure 57–3 for next higher assembly)	Ref	
–1	K7126123P1	—	. . SCREW, captive	8	
–2	K7128235P2	—	. . BUSHING	8	
–3	T7664840P1	—	. . CHASSIS	1	
–4	SK5001	K5610	. . RELAY, armature (Clare CP)	1	
–5	SK5001	K5608	. . RELAY, armature (Clare CP)	1	
–6	SK5001	K5606	. . RELAY, armature (Clare CP)	1	
–7	SK5001	K5604	. . RELAY, armature (Clare CP)	1	
–8	SK5001	K5602	. . RELAY, armature (Clare CP)	1	
–9	SK5001	K5609	. . RELAY, armature (Clare CP)	1	
–10	SK5001	K5607	. . RELAY, armature (Clare CP)	1	
–11	SK5001	K5605	. . RELAY, armature (Clare CP)	1	
–12	SK5001	K5603	. . RELAY, armature (Clare CP)	1	
–13	SK5001	K5601	. . RELAY, armature (Clare CP)	1	
–14	TSB8T101	XK5610	. . SOCKET, tube	1	
–15	TSB8T101	XK5608	. . SOCKET, tube	1	
–16	TSB8T101	XK5606	. . SOCKET, tube	1	
–17	TSB8T101	XK5604	. . SOCKET, tube	1	
–18	TSB8T101	XK5602	. . SOCKET, tube	1	
–19	TSB8T101	XK5609	. . SOCKET, tube	1	
–20	TSB8T101	XK5607	. . SOCKET, tube	1	
–21	TSB8T101	XK5605	. . SOCKET, tube	1	
–22	TSB8T101	XK5603	. . SOCKET, tube	1	
–23	TSB8T101	XK5601	. . SOCKET, tube	1	
–24	AN515–6–5	—	. . SCREW, mach: slot drive; RH; steel, cad pl; No. 6–32; 5/16 in lg (Att. Pt. for items 14 thru 23)	20	
–25	AN936B6B	—	. . WASHER, lock: bronze, tinned; round, No. 6; shakeproof-type, tw ext teeth (Att. Pt. for items 14 thru 23)	20	
–26	AN340–6	—	. . NUT, hex: steel, cad pl; No. 6–32 (Att. Pt. for items 14 thru 23)	20	
–27	926D	—	. . CLAMP (Birtcher)	10	
–28	AN515–8–5	—	. . SCREW, mach: slot drive; RH; steel, cad pl; No. 8–32; 5/16 in lg (Att. Pt.)	10	

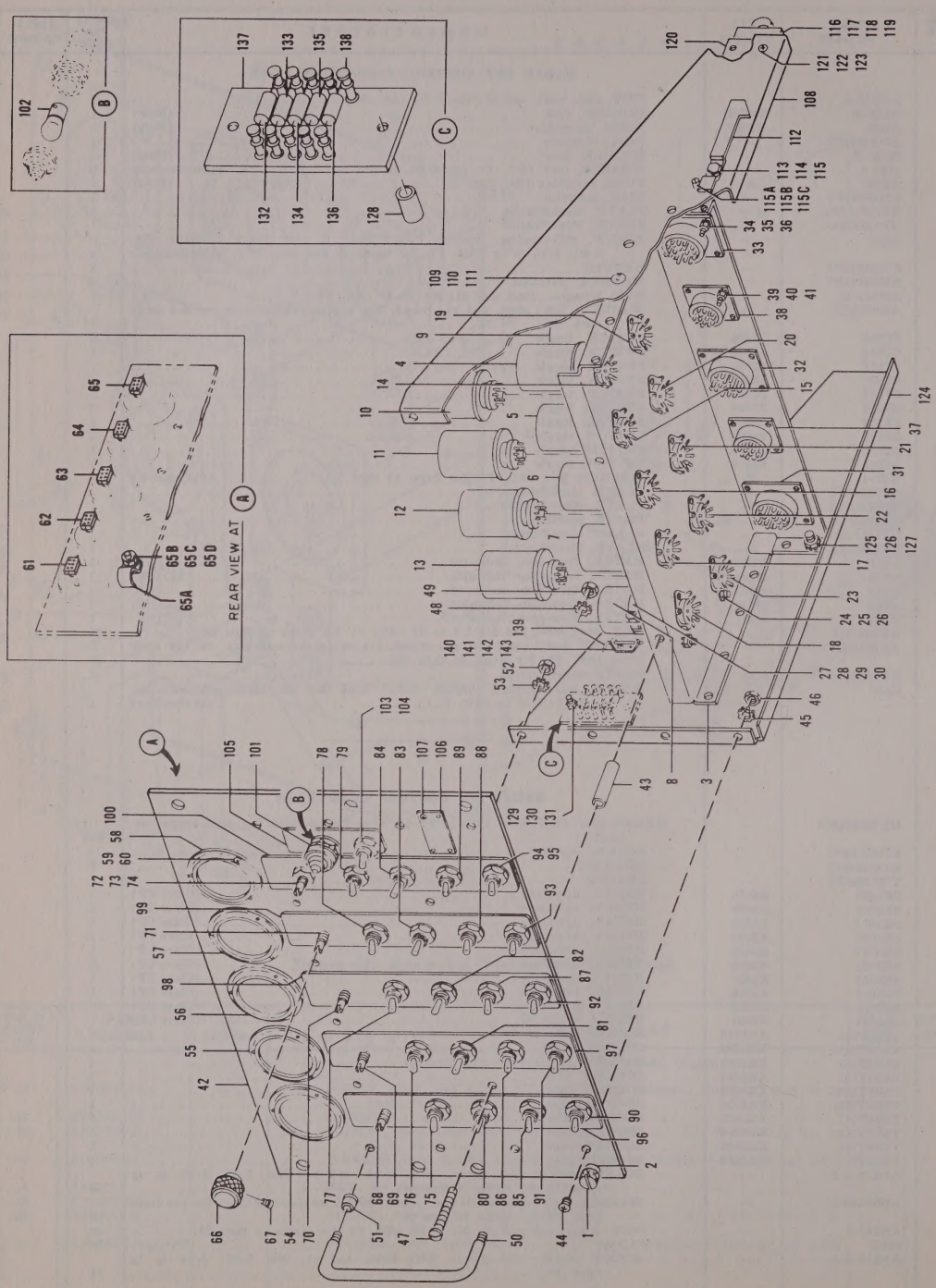

Figure 63. Radar Set Control C–554/CPS–6B

FIG. & INDEX NO.	PART NUMBER	REF SYMBOL	NOMENCLATURE 1 2 3 4 5 6 7	UNITS PER ASSY	APPLI-CATION
			RADAR SET CONTROL C–554/CPS–6B (Cont)		
63–29	AN936B8B	—	. . WASHER, lock: bronze, tinned; round, No. 8; shakeproof-type, tw ex teeth (Att. Pt.)	10	
–30	AN340–8	—	. . NUT, hex: steel, cad pl; No. 8–32 (Att. Pt.)	10	
–31	AN3102–28–16S	J5602	. . CONNECTOR, receptacle	1	
–32	AN3102–28–16P	J5601	. . CONNECTOR, receptacle	1	
–33	AN3102–28–16S	J5603	. . CONNECTOR, receptacle	1	
–34	AN515–6–7	—	. . SCREW, mach: slot drive; RH; steel, cad pl; No. 6–32; 7/16 in lg (Att. Pt. for items 31, 32 and 33)	12	
–35	AN936B6B	—	. . WASHER, lock: bronze, tinned; round, No. 6; shakeproof-type, tw ext teeth (Att. Pt. for items 31, 32 and 33)	12	
–36	AN340–6	—	. . NUT, hex: steel, cad pl; No. 6–32 (Att. Pt. for items 31, 32 and 33)	12	
–37	AN3102–22–19S	J5604	. . CONNECTOR, receptacle	1	
–38	AN3102–22–19S	J5605	. . CONNECTOR, receptacle	1	
–39	AN515–4–6	—	. . SCREW, mach: slot drive; RH; steel, cad pl; No. 4–40; 3/8 in lg (Att. Pt. for items 37 and 38)	8	
–40	AN936B4B	—	. . WASHER, lock: bronze, tinned; round, No. 4; shakeproof-type, tw ext teeth (Att. Pt. for items 37 and 38)	8	
–41	AN340–4	—	. . NUT, hex: steel, cad pl; No. 4–40 (Att. Pt. for items 37 and 38)	8	
–42	T7664839P1	—	. . PANEL	1	
–43	W7352666P12	—	. . POST, spacing	2	
–44	AN520B10–7	—	. . SCREW, mach: slot drive; RH; brass, black oxidized; No. 10–32; 7/16 in lg (Att. Pt. for item 42)	4	
–45	AN936B10B	—	. . WASHER, lock: bronze, tinned; round, No. 10; shakeproof-type, tw ext teeth (Att. Pt. for item 42)	4	
–46	AN345–10	—	. . NUT, hex: steel, cad pl; No. 10–32 (Att. Pt. for item 42)	4	
–47	AN520B10–36	—	. . SCREW, mach: slot drive; RH; brass, black oxidized; No. 10–32; 2-1/4 in lg (Att. Pt. for items 42 and 43)	2	
–48	AN936B10B	—	. . WASHER, lock: bronze, tinned; round, No. 10; shakeproof-type, tw ext teeth (Att. Pt. for items 42 and 43)	2	
–49	AN345–10	—	. . NUT, hex: steel, cad pl; No. 10–32 (Att. Pt. for items 42 and 43)	2	
–50	K7002870P1	—	. . HANDLE	2	
–51	K7002869P1	—	. . WASHER, extruded	4	
–52	AN345–10	—	. . NUT, hex: steel, cad pl; No. 10–32 (Att. Pt. for items 50 and 51)	4	
–53	AN936B10B	—	. . WASHER, lock: bronze, tinned; round, No. 10; shakeproof-type, tw ext teeth (Att. Pt. for items 50 and 51)	4	
–54	MR26W100DCUA	M5601	. . METER, ammeter	1	
–55	MR26W100DCUA	M5602	. . METER, ammeter	1	
–56	MR26W100DCUA	M5605	. . METER, ammeter	1	
–57	MR26W100DCUA	M5603	. . METER, ammeter	1	
–58	MR26W100DCUA	M5604	. . METER, ammeter	1	
–59	AN515B4–6	—	. . SCREW, mach: slot drive; RH; brass, black oxidized; No. 4–40; 3/8 in lg (Att. Pt. for items 54 thru 58)	15	
–60	1904	—	. . WASHER, lock (Att. Pt. for items 54 thru 58) (Shakeproof)	15	
–61	CM20D471J	C5604	. . CAPACITOR, fixed	1	
–62	CM20D471J	C5603	. . CAPACITOR, fixed	1	
–63	CM20D471J	C5605	. . CAPACITOR, fixed	1	
–64	CM20D471J	C5602	. . CAPACITOR, fixed	1	
–65	CM20D471J	C5601	. . CAPACITOR, fixed	1	
–65A	P7763541P3	—	. . CLAMP	4	
–65B	AN515B8–7	—	. . SCREW, mach: slot drive; RH; brass, black oxidized; No. 8–32; 7/16 in lg (Att. Pt.)	4	
–65C	1904	—	. . WASHER, lock (Att. Pt.) (Shakeproof)	4	
–65D	AN340–8	—	. . NUT, hex: steel, cad pl; No. 8–32 (Att. Pt.)	4	
–66	M7871270P4	—	. . KNOB	5	
–67	Coml	—	. . SCREW, set: Bristo six-spline drive; headless; steel, cad pl; No. 8–32; 3/16 in lg; cup point (Att. Pt.) (Bristolco)	10	
–68	P7770835P17	R5602	. . RESISTOR, variable	1	
–69	P7770835P17	R5604	. . RESISTOR, variable	1	
–70	P7770835P17	R5610	. . RESISTOR, variable	1	
–71	P7770835P17	R5606	. . RESISTOR, variable	1	
–72	P7770835P17	R5608	. . RESISTOR, variable	1	
–73	K7870535	—	. . NUT, hex (Att. Pt. for items 68 thru 72)	5	
–74	AN936A616B	—	. . WASHER, lock: bronze, tinned; round, 3/8 in; shakeproof-type, tw int teeth (Att. Pt. for items 68 thru 72)	5	
–75	ST22N	S5601	. . SWITCH, toggle	1	
–76	ST22N	S5608	. . SWITCH, toggle	1	
–77	ST22N	S5619	. . SWITCH, toggle	1	
–78	ST22N	S5609	. . SWITCH, toggle	1	
–79	ST22N	S5616	. . SWITCH, toggle	1	
–80	ST52P	S5604	. . SWITCH, toggle	1	
–81	ST52P	S5607	. . SWITCH, toggle	1	
–82	ST52P	S5622	. . SWITCH, toggle	1	
–83	ST52P	S5612	. . SWITCH, toggle	1	
–84	ST52P	S5615	. . SWITCH, toggle	1	
–85	ST22N	S5603	. . SWITCH, toggle	1	
–86	ST22N	S5606	. . SWITCH, toggle	1	
–87	ST22N	S5621	. . SWITCH, toggle	1	
–88	ST22N	S5611	. . SWITCH, toggle	1	
–89	ST22N	S5614	. . SWITCH, toggle	1	
–90	ST22N	S5602	. . SWITCH, toggle	1	
–91	ST22N	S5605	. . SWITCH, toggle	1	
–92	ST22N	S5620	. . SWITCH, toggle	1	
–93	ST22N	S5610	. . SWITCH, toggle	1	
–94	ST22N	S5613	. . SWITCH, toggle	1	
–95	1222–1	—	. . WASHER, lock (Att. Pt. for items 75 thru 94) Shakeproof)	20	

FIG. & INDEX NO.	PART NUMBER	REF SYMBOL	NOMENCLATURE 1 2 3 4 5 6 7	UNITS PER ASSY	APPLI-CATION
			RADAR SET CONTROL C–554/CPS–6B (Cont)		
63–96	NP125511A	—	. . PLATE, identification	1	
–97	NP125511B	—	. . PLATE, identification	1	
–98	NP125512A	—	. . PLATE, identification	1	
–99	NP125512B	—	. . PLATE, identification	1	
–100	NP125513	—	. . PLATE, identification	1	
–101	801002–511	XI5601	. . LIGHT, indicator (Dialco)	1	
–102	Coml	I5601	. . LAMP, incandescent: Mazda 6S6, 115 v, 6 w	1	
–103	ST22N	S5623	. . SWITCH, toggle	1	
–104	1222–1	—	. . WASHER, lock (Att. Pt.) (Shakeproof)	1	
–105	NP125514	—	. . PLATE, identification	1	
–106	NP136327A	—	. . PLATE, identification	1	
–107	Coml	—	. . SCREW, self-tapping: Phillips drive; Bind H; SS, black oxidized; No. 4–40; 3/16 in lg (Att. Pt.) (Shakeproof)	4	
–108	T7664858P2	—	. . GUSSET	1	
–109	AN520–10–6	—	. . SCREW, mach: slot drive; RH; steel, cad pl; No. 10–32; 3/8 in lg (Att. Pt.)	6	
–110	AN936B10B	—	. . WASHER, lock: bronze, tinned; round, No. 10; shakeproof-type, tw ext teeth (Att. Pt.)	6	
–111	AN345–10	—	. . NUT, hex: steel, cad pl; No. 10–32 (Att. Pt.)	6	
–112	K7002919P1	—	. . LATCH, lever	1	
–113	K7002918P1	—	. . SCREW, mach (Att. Pt.)	1	
–114	AN936B416B	—	. . WASHER, lock: bronze, tinned; round, 1/4 in; shakeproof-type, tw ext teeth (Att. Pt.)	1	
–115	AN340–416	—	. . NUT, hex: steel, cad pl; 1/4 in–20 (Att. Pt.)	1	
–115A	K7006867P1	—	. . SCREW, mach	2	
–115B	AN936B6B	—	. . WASHER, lock: bronze, tinned; round, No. 6; shakeproof-type, tw ext teeth	2	
–115C	AN340–6	—	. . NUT, hex: steel, cad pl; No. 6–32	2	
–116	ML7460330G5	S5507B	. . SWITCH, interlock	1	
–117	AN515–6R10	—	. . SCREW, mach: Phillips drive; RH; steel, cad pl; No. 6–32; 5/8 in lg (Att. Pt.)	2	
–118	AN936B6B	—	. . WASHER, lock: bronze, tinned; round, No. 6; shakeproof-type, tw ext teeth (Att. Pt.)	2	
–119	AN340–6	—	. . NUT, hex: steel, cad pl; No. 6–32 (Att. Pt.)	2	
–120	K7001151P1	—	. . BRACKET	1	
–121	AN515–6R6	—	. . SCREW, mach: Phillips drive; RH; steel, cad pl; No. 6–32; 3/8 in lg (Att. Pt.)	2	
–122	AN936B6B	—	. . WASHER, lock: bronze, tinned; round, No. 6; shakeproof-type, tw ext teeth (Att. Pt.)	2	
–123	AN340–6	—	. . NUT, hex: steel, cad pl; No. 6–32 (Att. Pt.)	2	
–124	T7664858P1	—	. . GUSSET	1	
–125	AN520–10–6	—	. . SCREW, mach: slot drive; RH; steel, cad pl; No. 10–32; 3/8 in lg (Att. Pt.)	6	
–126	AN936B10B	—	. . WASHER, lock: bronze, tinned; round, No. 10; shakeproof-type, tw ext teeth (Att. Pt.)	6	
–127	AN345–10	—	. . NUT, hex: steel, cad pl; No. 10–32 (Att. Pt.)	6	
–128	W7352666P11	—	. . POST, spacing	2	
	ML7125810G1	—	. . RESISTOR ASSEMBLY, fixed	1	
–129	AN515–8–10	—	. . SCREW, mach: slot drive; RH; steel, cad pl; No. 8–32; 5/8 in lg (Att. Pt. for ML7125810G1 and item 128)	2	
–130	AN936B8B	—	. . WASHER, lock: bronze, tinned; round, No. 8; shakeproof-type, tw ext teeth (Att. Pt. for ML7125810G1 and item 128)	2	
–131	AN340–8	—	. . NUT, hex: steel, cad pl; No. 8–32 (Att. Pt. for ML7125810G1 and item 128)	2	
–132	RC20BF334J	R5601	. . . RESISTOR, fixed	1	
–133	RC20BF334J	R5603	. . . RESISTOR, fixed	1	
–134	RC20BF334J	R5609	. . . RESISTOR, fixed	1	
–135	RC20BF334J	R5605	. . . RESISTOR, fixed	1	
–136	RC20BF334J	R5607	. . . RESISTOR, fixed	1	
	ML7125809G1	—	. . . BOARD, terminal	1	
–137	K7125809P2	—	. . . . PANEL	1	
–138	T100–3	—	. . . . TERMINAL, stud (Bead Chain)	10	
–139	K7876451P1	—	. . WRENCH	1	
–140	K7126174P1	—	. . HOLDER, wrench	1	
–141	AN515–4–4	—	. . SCREW, mach: slot drive; RH; steel, cad pl; No. 4–40; 1/4 in lg (Att. Pt.)	2	
–142	AN936B4B	—	. . WASHER, lock: bronze, tinned; round, No. 4; shakeproof-type, tw ext teeth (Att. Pt.)	2	
–143	AN340–4	—	. . NUT, hex: steel, cad pl; No. 4–40 (Att. Pt.)	2	

FIG. & INDEX NO.	PART NUMBER	REF SYMBOL	NOMENCLATURE 1 2 3 4 5 6 7	UNITS PER ASSY	APPLI-CATION
			VOLTAGE REGULATOR CN–92/CPS–6B		
64–	ML7352557G1	—	. VOLTAGE REGULATOR CN–92/CPS–6B (See Figure 57–4 for next higher assembly)	Ref	
–1	W7352546P1	—	. . CHASSIS	1	
–2	926A	—	. . CLAMP (Birtcher)	4	
–3	AN520–10–8	—	. . SCREW, mach: slot drive; RH; steel, cad pl; No. 10–32; 1/2 in lg (Att. Pt.)	4	
–4	AN936B10B	—	. . WASHER, lock: bronze, tinned; round, No. 10; shakeproof-type, tw ext teeth (Att. Pt.)	4	
–5	AN345–10	—	. . NUT, hex: steel, cad pl; No. 10–32 (Att. Pt.)	4	
–6	926C	—	. . CLAMP (Birtcher)	11	
–7	AN520–10R6	—	. . SCREW, mach: Phillips drive; RH; steel, cad pl; No. 10–32; 3/8 in lg (Att. Pt.)	11	
–8	AN936B10B	—	. . WASHER, lock: bronze, tinned; round, No. 10; shakeproof-type, tw ext teeth (Att. Pt.)	11	
–9	AN345–10	—	. . NUT, hex: steel, cad pl; No. 10–32 (Att. Pt.)	11	
–10	6Y6G	V7001	. . TUBE, electron	1	
–11	6Y6G	V7002	. . TUBE, electron	1	
–12	6Y6G	V7003	. . TUBE, electron	1	
–13	6Y6G	V7004	. . TUBE, electron	1	
–14	6Y6G	V7005	. . TUBE, electron	1	
–15	6Y6G	V7006	. . TUBE, electron	1	
–16	6Y6G	V7007	. . TUBE, electron	1	
–17	6Y6G	V7008	. . TUBE, electron	1	
–18	6Y6G	V7009	. . TUBE, electron	1	
–19	6Y6G	V7010	. . TUBE, electron	1	
–20	6L6GA	V7013	. . TUBE, electron	1	
–21	6SH7	V7011	. . TUBE, electron	1	
–22	OD3/VR150	V7012	. . TUBE, electron	1	
–23	6SH7	V7014	. . TUBE, electron	1	
–24	6AG7	V7015	. . TUBE, electron	1	
–25	OC3/VR105	V7016	. . TUBE, electron	1	
–26	OD3/VR150	V7017	. . TUBE, electron	1	
–27	OD3/VR150	V7018	. . TUBE, electron	1	
–28	RW14F103	R7035	. . RESISTOR, fixed	1	
–29	RW14F632	R7037	. . RESISTOR, fixed	1	
–30	RW14F632	R7038	. . RESISTOR, fixed	1	
–31	RW14F632	R7039	. . RESISTOR, fixed	1	
–32	ML7770257G2	—	. . CLIP SET	4	
–33	AN520–10R6	—	. . SCREW, mach: Phillips drive; RH; steel, cad pl; No. 10–32; 3/8 in lg (Att. Pt.)	8	
–34	AN936B10B	—	. . WASHER, lock: bronze, tinned; round, No. 10; shakeproof-type, tw ext teeth (Att. Pt.)	8	
–35	7480469	T7001	. . TRANSFORMER, power (GE)	1	
–36	AN340–8	—	. . NUT, hex: steel, cad pl; No. 8–32 (Att. Pt.)	4	
–37	AN936B8B	—	. . WASHER, lock: bronze, tinned; round, No. 8; shakeproof-type, tw ext teeth (Att. Pt.)	4	
–38	CP70B1FG106K	C7001	. . CAPACITOR, fixed	1	
–39	CP70B1FG106K	C7002	. . CAPACITOR, fixed	1	
–40	CP07SD5	—	. . CLAMP (Att. Pt. for items 38 and 39)	2	
–41	AN345–10	—	. . NUT, hex: steel, cad pl; No. 10–32 (Att. Pt. for items 38 and 39)	8	
–42	AN936B10B	—	. . WASHER, lock: bronze, tinned; round, No. 10; shakeproof-type, tw ext teeth (Att. Pt. for items 38 and 39)	8	
–43	AN3102–22–33P	J7001	. . CONNECTOR, receptacle	1	
–44	AN515–8R6	—	. . SCREW, mach: Phillips drive; RH; steel, cad pl; No. 8–32; 3/8 in lg (Att. Pt.)	4	
–45	AN936B8B	—	. . WASHER, lock: bronze, tinned; round, No. 8; shakeproof-type, tw ext teeth (Att. Pt.)	4	
–46	AN340–8	—	. . NUT, hex: steel, cad pl; No. 8–32 (Att. Pt.)	4	
–47	AN3102–28–2S	J7002	. . CONNECTOR, receptacle	1	
–48	AN515–6R6	—	. . SCREW, mach: Phillips drive; RH; steel, cad pl; No. 6–32; 3/8 in lg (Att. Pt.)	4	
–49	AN936B6B	—	. . WASHER, lock: bronze, tinned; round, No. 6; shakeproof-type, tw ext teeth (Att. Pt.)	4	
–50	AN340–6	—	. . NUT, hex: steel, cad pl; No. 6–32 (Att. Pt.)	4	
–51	ML7460330G5	S6905B	. . SWITCH, interlock	1	
–52	AN515–6R10	—	. . SCREW, mach: Phillips drive; RH; steel, cad pl; No. 6–32; 5/8 in lg (Att. Pt.)	2	
–53	AN936B6B	—	. . WASHER, lock: bronze, tinned; round, No. 6; shakeproof-type, tw ext teeth (Att. Pt.)	2	
–54	AN340–6	—	. . NUT, hex: steel, cad pl; No. 6–32 (Att. Pt.)	2	
–55	M7405262P1	—	. . PLATE, reinforcing	1	
–56	AN515B8–6	—	. . SCREW, mach: slot drive; RH; brass, black oxidized; No. 8–32; 3/8 in lg (Att. Pt.)	5	
–57	AN936B8B	—	. . WASHER, lock: bronze, tinned; round, No. 8; shakeproof-type, tw ext teeth (Att. Pt.)	5	
–58	RC20BF684J	R7040	. . RESISTOR, fixed	1	
–59	RC20BF684J	R7041	. . RESISTOR, fixed	1	
–60	RC20BF684J	R7042	. . RESISTOR, fixed	1	
–61	RC20BF684J	R7043	. . RESISTOR, fixed	1	
–62	RC20BF104J	R7048	. . RESISTOR, fixed	1	
–63	RC20BF104J	R7049	. . RESISTOR, fixed	1	
–64	RC20BF104J	R7045	. . RESISTOR, fixed	1	
–65	RC20BF224J	R7044	. . RESISTOR, fixed	1	
–66	RC20BF224J	R7046	. . RESISTOR, fixed	1	
–67	RC20BF224J	R7047	. . RESISTOR, fixed	1	
–68	CM35D472J	C7008	. . CAPACITOR, fixed	1	

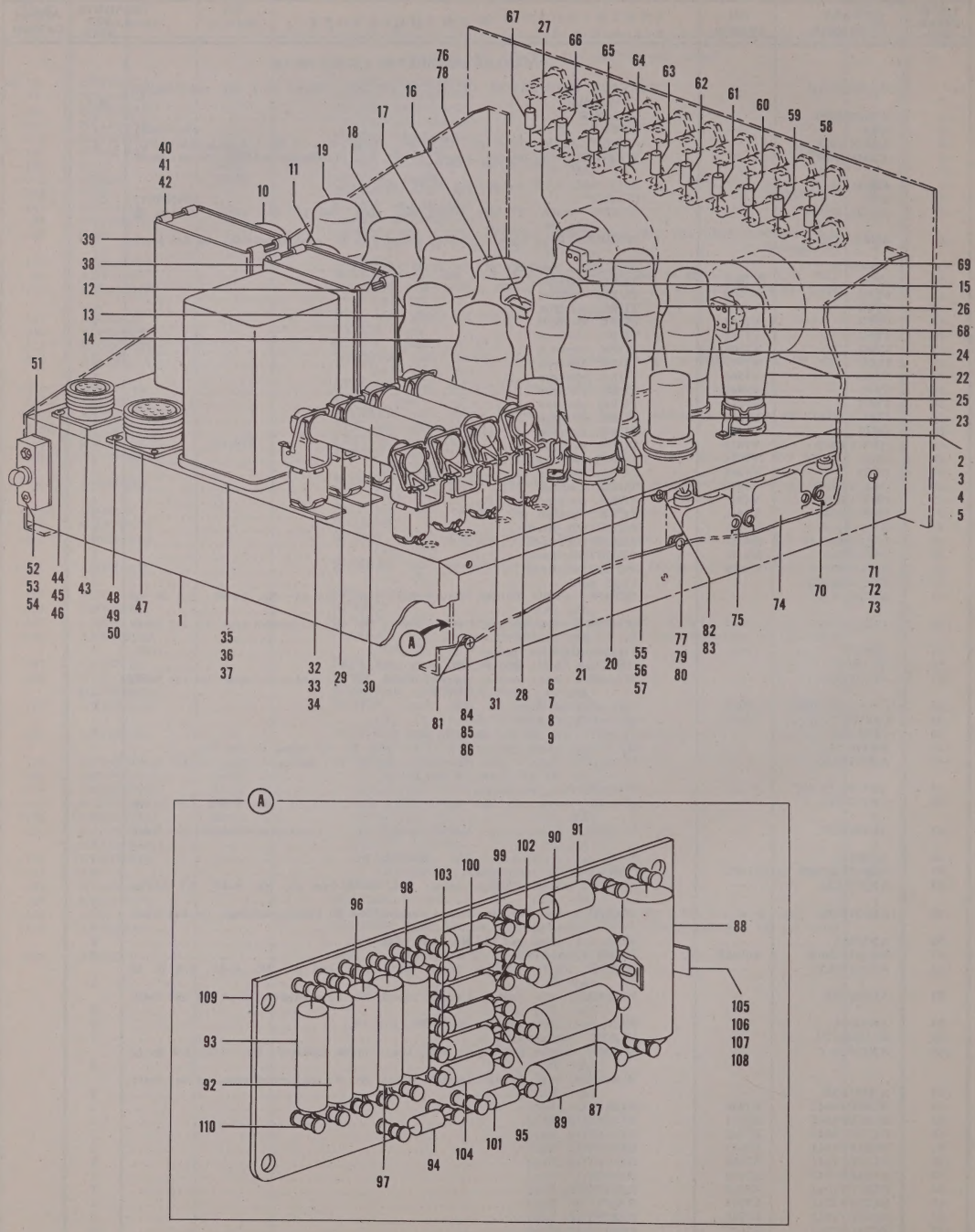

Figure 64. Voltage Regulator CN–92/CPS–6B, Front View (Sheet 1 of 2 sheets, Index Nos. 1 thru 110)

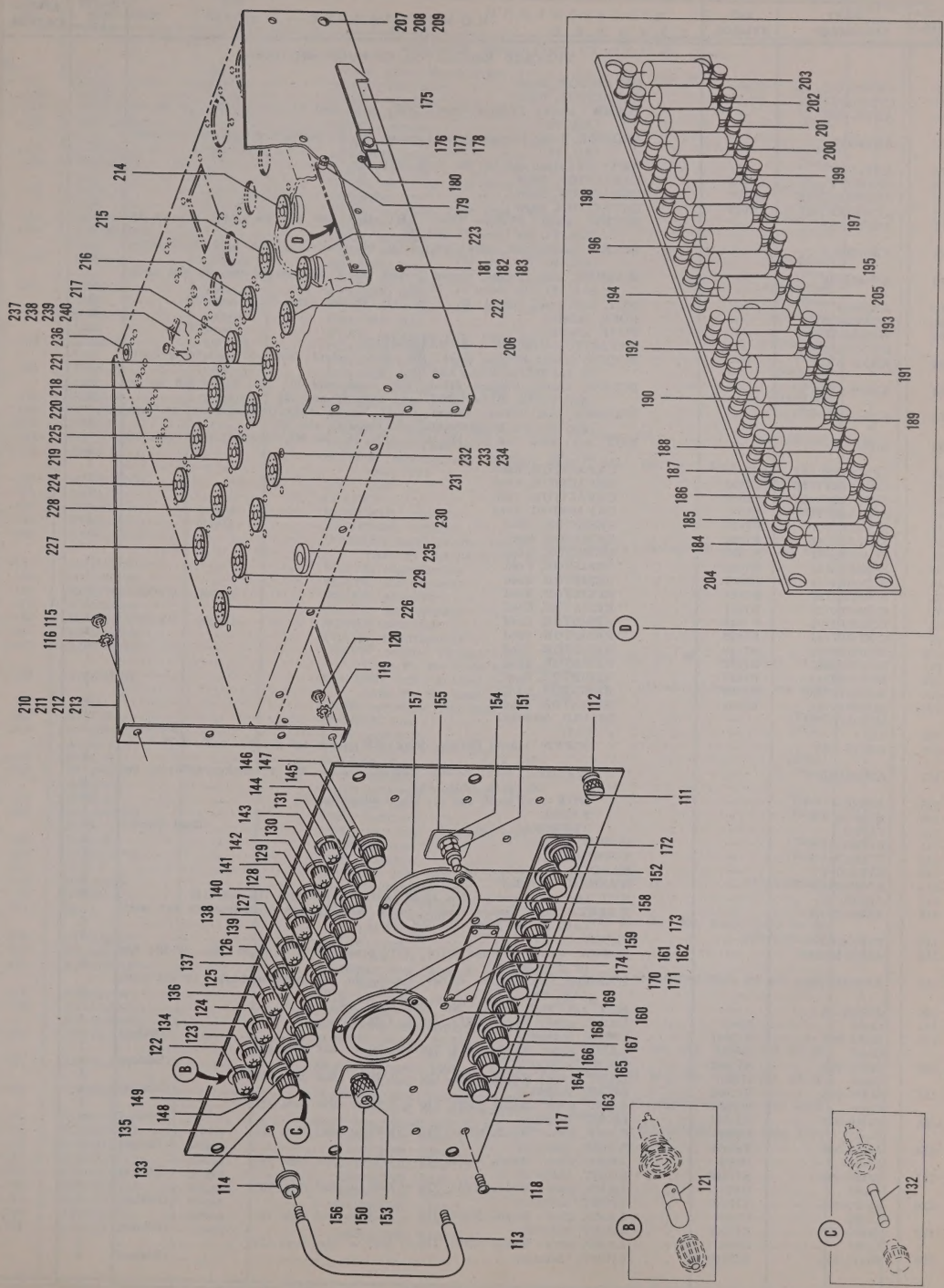

Figure 64. Voltage Regulator CN–92/CPS–6B, Rear View (Sheet 2 of 2 sheets, Index Nos. 111 thru 240)

FIG. & INDEX NO.	PART NUMBER	REF SYMBOL	NOMENCLATURE 1 2 3 4 5 6 7	UNITS PER ASSY	APPLI-CATION
			VOLTAGE REGULATOR CN–92/CPS–6B (Cont)		
64–69	CM35D472J	C7009	. . CAPACITOR, fixed	1	
–70	CP53B1FF504K	C7003	. . CAPACITOR, fixed	1	
–71	AN515–8R6	—	. . SCREW, mach: Phillips drive; RH; steel, cad pl; No. 8–32; 3/8 in lg (Att. Pt.)	2	
–72	AN936B8B	—	. . WASHER, lock: bronze, tinned; round, No. 8; shakeproof-type, tw ext teeth (Att. Pt.)	2	
–73	AN340–8	—	. . NUT, hex: steel, cad pl; No. 8–32 (Att. Pt.)	2	
–74	CP53B1FF105K	C7006	. . CAPACITOR, fixed	1	
–75	CP53B1FF105K	C7007	. . CAPACITOR, fixed	1	
–76	CP53B1FF105K	C7012	. . CAPACITOR, fixed	1	
–77	AN515–8R6	—	. . SCREW, mach: Phillips drive; RH; steel, cad pl; No. 8–32; 3/8 in lg (Att. Pt. for items 74 and 75)	4	
–78	AN515B8–5	—	. . SCREW, mach: slot drive; RH; brass, black oxidized; No. 8–32; 5/16 in lg (Att. Pt. for item 76)	2	
–79	AN936B8B	—	. . WASHER, lock: bronze, tinned; round, No. 8; shakeproof-type, tw ext teeth (Att. Pt. for items 74, 75 and 76)	6	
–80	AN340–8	—	. . NUT, hex: steel, cad pl; No. 8–32 (Att. Pt. for items 74, 75 and 76)	6	
–81	W7352557P11	—	. . POST, spacing	2	
–82	W7352557P12	—	. . POST, spacing	2	
	ML7481406G1	—	. . CAPACITOR-RESISTOR SUBASSEMBLY	1	
–83	AN515–8R10	—	. . SCREW, mach: Phillips drive; RH; steel, cad pl; No. 8–32; 5/8 in lg (Att. Pt. for ML7481406G1 and item 82)	2	
–84	AN505–8R10	—	. . SCREW, mach: Phillips drive; FH; steel, cad pl; No. 8–32; 5/8 in lg (Att. Pt. for ML7481406G1 and items 81 and 82)	2	
–85	AN936B8B	—	. . WASHER, lock: bronze, tinned; round, No. 8; shakeproof-type, tw ext teeth (Att. Pt. for ML7481406G1 and items 81 and 82)	4	
–86	AN340–8	—	. . NUT, hex: steel, cad pl; No. 8–32 (Att. Pt. for ML7481406G1 and items 81 and 82)	4	
–87	CP26A1EF103V	C7004	. . . CAPACITOR, fixed	1	
–88	CP26A1EF104K	C7005	. . . CAPACITOR, fixed	1	
–89	CP26A1EF103V	C7010	. . . CAPACITOR, fixed	1	
–90	CP26A1EF103V	C7011	. . . CAPACITOR, fixed	1	
–91	RC30BF101J	R7050	. . . RESISTOR, fixed	1	
–92	RC40BF104J	R7021	. . . RESISTOR, fixed	1	
–93	RC40BF104J	R7023	. . . RESISTOR, fixed	1	
–94	RC20BF474J	R7024	. . . RESISTOR, fixed	1	
–95	RC30BF474J	R7025	. . . RESISTOR, fixed	1	
–96	RC40BF472J	R7026	. . . RESISTOR, fixed	1	
–97	RC40BF472J	R7027	. . . RESISTOR, fixed	1	
–98	RC40BF472J	R7028	. . . RESISTOR, fixed	1	
–99	RC30BF474J	R7029	. . . RESISTOR, fixed	1	
–100	RC30BF333J	R7030	. . . RESISTOR, fixed	1	
–101	RC20BF223J	R7032	. . . RESISTOR, fixed	1	
–102	RC30BF224J	R7033	. . . RESISTOR, fixed	1	
–103	RC30BF472J	R7034	. . . RESISTOR, fixed	1	
–104	RC30BF222J	R7036	. . . RESISTOR, fixed	1	
	ML7481407G1	—	. . . BOARD, terminal	1	
–105	TH17	—	. . . . CLIP (Mallory)	1	
–106	AN515–4R5	—	. . . . SCREW, mach: Phillips drive; RH; steel, cad pl; No. 4–40; 5/16 in lg (Att. Pt.)	1	
–107	AN936B4B	—	. . . . WASHER, lock: bronze, tinned; round, No. 4; shakeproof-type, tw ext teeth (Att. Pt.)	1	
–108	AN340–4	—	. . . . NUT, hex: steel, cad pl; No. 4–40 (Att. Pt.)	1	
–109	M7481407P2	—	. . . . PANEL	1	
–110	T100–3	—	. . . . TERMINAL, stud (Bead Chain)	35	
–111	K7126123P1	—	. . SCREW, captive	6	
–112	K7128235P2	—	. . BUSHING	6	
–113	K7002870P1	—	. . HANDLE	2	
–114	K7002869P1	—	. . WASHER, extruded	4	
–115	AN345–10	—	. . NUT, hex: steel, cad pl; No. 10–32 (Att. Pt. for items 113 and 114)	4	
–116	AN936B10B	—	. . WASHER, lock: bronze, tinned; round, No. 10; shakeproof-type, tw ext teeth (Att. Pt. for items 113 and 114)	4	
–117	P7770692P1	—	. . PANEL	1	
–118	AN520B10R6	—	. . SCREW, mach: Phillips drive; RH; brass, black oxidized; No. 10–32; 3/8 in lg (Att. Pt.)	8	
–119	AN936B10B	—	. . WASHER, lock: bronze, tinned; round, No. 10; shakeproof-type, tw ext teeth (Att. Pt.)	8	
–120	AN345–10	—	. . NUT, hex: steel, cad pl; No. 10–32 (Att. Pt.)	8	
–121	Coml	I7001	. . LAMP, glow: Mazda NE51, 110 v, 1/25 w	1	
–122	53410–995	XI7001	. . LIGHT, indicator (Dialco)	1	
	Coml	I7002	. . LAMP, glow: Mazda NE51, 110 v, 1/25 w (Ref item 121)	1	
–123	53410–995	XI7002	. . LIGHT, indicator (Dialco)	1	
	Coml	I7003	. LAMP, glow: Mazda NE51, 110 v, 1/25 w (Ref item 121)	1	
–124	53410–995	XI7003	. . LIGHT, indicator (Dialco)	1	
	Coml	I7004	. . LAMP, glow: Mazda NE51, 110 v, 1/25 w (Ref item 121)	1	
–125	53410–995	XI7004	. . LIGHT, indicator (Dialco)	1	
	Coml	I7005	. . LAMP, glow: Mazda NE51, 110 v, 1/25 w (Ref item 121)	1	
–126	53410–995	XI7005	. . LIGHT, indicator (Dialco)	1	
	Coml	I7006	. . LAMP, glow: Mazda NE51, 110 v, 1/25 w (Ref item 121)	1	
–127	53410–995	XI7006	. . LIGHT, indicator (Dialco)	1	
	Coml	I7007	. . LAMP, glow: Mazda NE51, 110 v, 1/25 w (Ref item 121)	1	
–128	53410–995	XI7007	. . LIGHT, indicator (Dialco)	1	
	Coml	I7008	. . LAMP, glow: Mazda NE51, 110 v, 1/25 w (Ref item 121)	1	
–129	53410–995	XI7008	. . LIGHT, indicator (Dialco)	1	
	Coml	I7009	. . LAMP, glow: Mazda NE51, 110 v, 1/25 w (Ref item 121)	1	
–130	53410–995	XI7009	. . LIGHT, indicator (Dialco)	1	

FIG. & INDEX NO.	PART NUMBER	REF SYMBOL	NOMENCLATURE 1 2 3 4 5 6 7	UNITS PER ASSY	APPLI-CATION
			VOLTAGE REGULATOR CN–92/CPS–6B (Cont)		
64–	Coml	I7010	. . LAMP, glow: Mazda NE51, 110 v, 1/25 w (Ref item 121)	1	
–131	53410–995	XI7010	. . LIGHT, indicator (Dialco)	1	
–132	ABS5	F7001	. . FUSE, cartridge (Buss)	1	
–133	HCM–R	XF7001	. . HOLDER, fuse (Buss)	1	
–134	K7126649P5	—	. . DISK, indicator	1	
	1047	F7002	. . FUSE, cartridge (Ref item 132) (Littelfuse)	1	
–135	HCM–R	XF7002	. . HOLDER, fuse (Buss)	1	
–136	K7126649P4	—	. . DISK, indicator	1	
	1046	F7003	. . FUSE, cartridge (Ref item 132) (Littelfuse)	1	
–137	HCM–R	XF7003	. . HOLDER, fuse (Buss)	1	
	1046	F7004	. . FUSE, cartridge (Ref item 132) (Littelfuse)	1	
–138	HCM–R	XF7004	. . HOLDER, fuse (Buss)	1	
–139	K7126649P3	—	. . DISK, indicator	2	
	1322	F7005	. . FUSE, cartridge (Ref item 132) (Littelfuse)	1	
–140	HCM–R	XF7005	. . HOLDER, fuse (Buss)	1	
	1322	F7006	. . FUSE, cartridge (Ref item 132) (Littelfuse)	1	
–141	HCM–R	XF7006	. . HOLDER, fuse (Buss)	1	
	1322	F7007	. . FUSE, cartridge (Ref item 132) (Littelfuse)	1	
–142	HCM–R	XF7007	. . HOLDER, fuse (Buss)	1	
	1322	F7008	. . FUSE, cartridge (Ref item 132) (Littelfuse)	1	
–143	HCM–R	XF7008	. . HOLDER, fuse (Buss)	1	
	1322	F7009	. . FUSE, cartridge (Ref item 132) (Littelfuse)	1	
–144	HCM–R	XF7009	. . HOLDER, fuse (Buss)	1	
	1322	F7010	. . FUSE, cartridge (Ref item 132) (Littelfuse)	1	
–145	HCM–R	XF7010	. . HOLDER, fuse (Buss)	1	
–146	K7126649P1	—	. . DISK, indicator	6	
–147	1228–2	—	. . WASHER, lock (Att. Pt. for items 133 thru 146) (Shakeproof)	10	
–148	NP137449	—	. . PLATE, identification	1	
–149	Coml	—	. . SCREW, self-tapping: Phillips drive; RH; SS; No. 4–40; 3/16 in lg (Att. Pt.) (Shakeproof)	4	
–150	M7481469P1	—	. . NUT, lock	2	
–151	10061	—	. . COLLET (Millen)	2	
–152	P7768146P4	R7022	. . RESISTOR, variable	1	
–153	P7768146P4	R7031	. . RESISTOR, variable	1	
–154	AN936A616B	—	. . WASHER, lock: bronze, tinned; round, 3/8 in; shakeproof-type, tw int teeth (Att. Pt. for items 152 and 153)	2	
–155	NP125555B	—	. . PLATE, identification	1	
–156	NP125555A	—	. . PLATE, identification	1	
–157	MR36W500DCVV	M7001	. . METER, ammeter	1	
–158	NP125298C	—	. . PLATE, identification	1	
–159	MR36W200DCVV	M7002	. . METER, ammeter	1	
–160	NP137452B	—	. . PLATE, identification	1	
–161	AN515–6R5	—	. . SCREW, mach: Phillips drive; RH; steel, cad pl; No. 6–32; 5/16 in lg (Att. Pt. for items 157 thru 160)	6	
–162	AN936B6B	—	. . WASHER, lock: bronze, tinned; round, No. 6; shakeproof-type, tw ext teeth (Att. Pt. for items 157 thru 160)	6	
	ABS1	—	. . FUSE, cartridge (Ref item 132) (Buss)	1	
–163	HCM–R	—	. . HOLDER, fuse (Buss)	1	
–164	K7126649P5	—	. . DISK, indicator	1	
	AGS3/4	—	. . FUSE, cartridge (Ref item 132) (Buss)	1	
–165	HCM–R	—	. . HOLDER, fuse (Buss)	1	
–166	K7126649P4	—	. . DISK, indicator	1	
	AGS1/2	—	. . FUSE, cartridge (Ref item 132) (Buss)	1	
–167	HCM–R	—	. . HOLDER, fuse (Buss)	2	
–168	K7126649P3	—	. . DISK, indicator	2	
	MCB1/16	—	. . FUSE, cartridge (Ref item 132) (Buss)	6	
–169	HCM–R	—	. . HOLDER, fuse (Buss)	6	
–170	K7126649P1	—	. . DISK, indicator	6	
–171	1228–2	—	. . WASHER, lock (Att. Pt. for items 163 thru 170) (Shakeproof)	10	
–172	NP125979	—	. . PLATE, identification	1	
–173	NP140161	—	. . PLATE, identification	1	
–174	Coml	—	. . SCREW, self-tapping: Phillips drive; Bind H; SS; No. 4–40; 3/16 in lg (Att. Pt.) (Shakeproof)	4	
–175	K7002919P1	—	. . LATCH, lever	1	
–176	K7002918P1	—	. . STUD (Att. Pt.)	1	
–177	AN936B416B	—	. . WASHER, lock: bronze, tinned; round, 1/4 in; shakeproof-type, tw ext teeth (Att. Pt.)	1	
–178	AN340–416	—	. . NUT, hex: steel, cad pl; 1/4 in–20 (Att. Pt.)	1	
–179	W7352557P11	—	. . POST, spacing	5	
	ML7481408G1	—	. . RESISTOR ASSEMBLY, fixed	1	
–180	AN505–8R10	—	. . SCREW, mach: Phillips drive; FH; steel, cad pl; No. 8–32; 5/8 in lg (Att. Pt. for ML7481408G1 and item 179)	1	
–181	AN515–8R10	—	. . SCREW, mach: Phillips drive; RH; steel, cad pl; No. 8–32; 5/8 in lg (Att. Pt. for ML7481408G1 and item 179)	4	
–182	AN936B8B	—	. . WASHER, lock: bronze, tinned; round, No. 8; shakeproof-type, tw ext teeth (Att. Pt. for ML7481408G1 and item 179)	5	
–183	AN340–8	—	. . NUT, hex: steel, cad pl; No. 8–32 (Att. Pt. for ML7481408G1 and item 179)	5	
–184	RC30BF680J	R7001	. . . RESISTOR, fixed	1	
–185	RC30BF102J	R7002	. . . RESISTOR, fixed	1	
–186	RC30BF680J	R7003	. . . RESISTOR, fixed	1	
–187	RC30BF102J	R7004	. . . RESISTOR, fixed	1	
–188	RC30BF680J	R7005	. . . RESISTOR, fixed	1	
–189	RC30BF102J	R7006	. . . RESISTOR, fixed	1	
–190	RC30BF680J	R7007	. . . RESISTOR, fixed	1	
–191	RC30BF102J	R7008	. . . RESISTOR, fixed	1	

FIG. & INDEX NO.	PART NUMBER	REF SYMBOL	NOMENCLATURE 1 2 3 4 5 6 7	UNITS PER ASSY	APPLI-CATION
			VOLTAGE REGULATOR CN–92/CPS–6B (Cont)		
64–192	RC30BF680J	R7009	. . . RESISTOR, fixed	1	
–193	RC30BF102J	R7010	. . . RESISTOR, fixed	1	
–194	RC30BF680J	R7011	. . . RESISTOR, fixed	1	
–195	RC30BF102J	R7012	. . . RESISTOR, fixed	1	
–196	RC30BF680J	R7013	. . . RESISTOR, fixed	1	
–197	RC30BF102J	R7014	. . . RESISTOR, fixed	1	
–198	RC30BF680J	R7015	. . . RESISTOR, fixed	1	
–199	RC30BF102J	R7016	. . . RESISTOR, fixed	1	
–200	RC30BF680J	R7017	. . . RESISTOR, fixed	1	
–201	RC30BF102J	R7018	. . . RESISTOR, fixed	1	
–202	RC30BF680J	R7019	. . . RESISTOR, fixed	1	
–203	RC30BF102J	R7020	. . . RESISTOR, fixed	1	
	ML7481405G1	—	. . . BOARD, terminal	1	
–204	M7481405P2	—	. . . . PANEL	1	
–205	T100–3	—	. . . . TERMINAL, stud (Bead Chain)	40	
–206	M7481409P1	—	. . GUSSET	1	
–207	AN520–10R6	—	. . SCREW, mach: Phillips drive; RH; steel, cad pl; No. 10–32; 3/8 in lg (Att. Pt.)	5	
–208	AN936B10B	—	. . WASHER, lock: bronze, tinned; round, No. 10; shakeproof-type, tw ext teeth (Att. Pt.)	5	
–209	AN345–10	—	. . NUT, hex: steel, cad pl; No. 10–32 (Att. Pt.)	5	
–210	M7481409P2	—	. . GUSSET	1	
–211	AN520–10R6	—	. . SCREW, mach: Phillips drive; RH; steel, cad pl; No. 10–32; 3/8 in lg (Att. Pt.)	5	
–212	AN936B10B	—	. . WASHER, lock: bronze, tinned; round, No. 10; shakeproof-type, tw ext teeth (Att. Pt.)	5	
–213	AN345–10	—	. . NUT, hex: steel, cad pl; No. 10–32 (Att. Pt.)	5	
–214	TSB8T101	XV7001	. . SOCKET, tube	1	
–215	TSB8T101	XV7002	. . SOCKET, tube	1	
–216	TSB8T101	XV7003	. . SOCKET, tube	1	
–217	TSB8T101	XV7004	. . SOCKET, tube	1	
–218	TSB8T101	XV7005	. . SOCKET, tube	1	
–219	TSB8T101	XV7006	. . SOCKET, tube	1	
–220	TSB8T101	XV7007	. . SOCKET, tube	1	
–221	TSB8T101	XV7008	. . SOCKET, tube	1	
–222	TSB8T101	XV7009	. . SOCKET, tube	1	
–223	TSB8T101	XV7010	. . SOCKET, tube	1	
–224	TSB8T101	XV7013	. . SOCKET, tube	1	
–225	TSB8T101	XV7011	. . SOCKET, tube	1	
–226	TSB8T101	XV7012	. . SOCKET, tube	1	
–227	TSB8T101	XV7014	. . SOCKET, tube	1	
–228	TSB8T101	XV7015	. . SOCKET, tube	1	
–229	TSB8T101	XV7016	. . SOCKET, tube	1	
–230	TSB8T101	XV7017	. . SOCKET, tube	1	
–231	TSB8T101	XV7018	. . SOCKET, tube	1	
–232	AN515–6R5	—	. . SCREW, mach: Phillips drive; RH; steel, cad pl; No. 6–32; 5/16 in lg (Att. Pt. for items 214 thru 231)	36	
–233	AN936B6B	—	. . WASHER, lock: bronze, tinned; round, No. 6; shakeproof-type, tw ext teeth (Att. Pt. for items 214 thru 231)	36	
–234	AN340–6	—	. . NUT, hex: steel, cad pl; No. 6–32 (Att. Pt. for items 214 thru 231)	36	
–235	M2R53P14	—	. . GROMMET	1	
–236	M2R53P12	—	. . GROMMET	6	
–237	M7405263P1	—	. . PLATE, angle	1	
–238	AN520–10R7	—	. . SCREW, mach: Phillips drive; RH; steel, cad pl; No. 10–32; 7/16 in lg (Att. Pt.)	2	
–239	AN936B10B	—	. . WASHER, lock: bronze, tinned; round, No. 10; shakeproof-type, tw ext teeth (Att. Pt.)	2	
–240	AN345–10	—	. . NUT, hex: steel, cad pl; No. 10–32 (Att. Pt.)	2	
			INTERLOCK CONTROL C–556/CPS–6B		
65–	ML7666740G1	—	. INTERLOCK CONTROL C–556/CPS–6B (See Figure 57–5 for next higher assembly)	Ref	
–1	K7126123P1	—	. . SCREW, captive	6	
–2	K7128235P2	—	. . BUSHING	6	
–3	T7666732P2	—	. . CHASSIS	1	
–4	AN3102–28–2P	—	. . CONNECTOR, receptacle	1	
–5	AN3102–28–2S	—	. . CONNECTOR, receptacle	1	
–6	AN515–4–6	—	. . SCREW, mach: slot drive; RH; steel, cad pl; No. 4–40; 3/8 in lg (Att. Pt. for items 4 and 5)	8	
–7	AN936B4B	—	. . WASHER, lock: bronze, tinned; round, No. 4; shakeproof-type, tw ext teeth (Att. Pt. for items 4 and 5)	8	
–8	AN340–4	—	. . NUT, hex: steel, cad pl; No. 4–40 (Att. Pt. for items 4 and 5)	8	
–9	K7874555P20	—	. . WASHER, flat	2	
	ML7129146G1	—	. . BAR SUBASSEMBLY, bus	1	
–10	AN515–8–6	—	. . SCREW, mach: slot drive; RH; steel, cad pl; No. 8–32; 3/8 in lg (Att. Pt. for ML7129146G1 and item 9)	2	
–11	AN936B8B	—	. . WASHER, lock: bronze, tinned; round, No. 8; shakeproof-type, tw ext teeth (Att. Pt. for ML7129146G1 and item 9)	2	
–12	K7107719P7	—	. . . POST, supporting	2	
–12A	K7874555P10	—	. . . WASHER, flat	4	

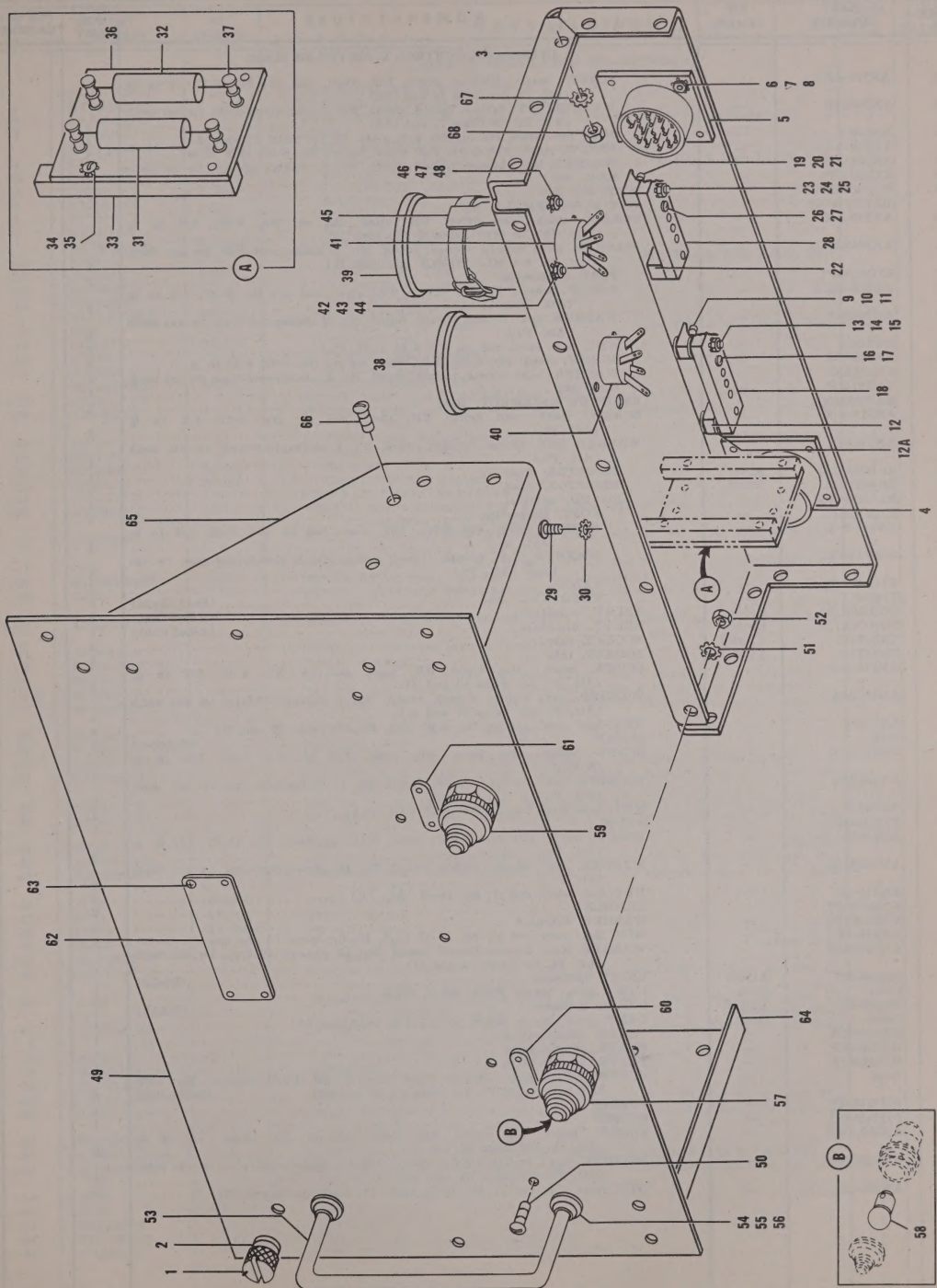

Figure 65. Interlock Control C-556/CPS-6B

FIG. & INDEX NO.	PART NUMBER	REF SYMBOL	NOMENCLATURE 1 2 3 4 5 6 7	UNITS PER ASSY	APPLI-CATION
			INTERLOCK CONTROL C–556/CPS–6B (Cont)		
65–13	AN515–6R16	—	. . . SCREW, mach: Phillips drive; RH; steel, cad pl; No. 6–32; 1 in lg (Att. Pt. for items 12 and 12A)	2	
–14	AN936B6B	—	. . . WASHER, lock: bronze, tinned; round, No. 6; shakeproof-type, tw ext teeth (Att. Pt. for items 12 and 12A)	2	
–15	AN340–6	—	. . . NUT, hex: steel, cad pl; No. 6–32 (Att. Pt. for items 12 and 12A)	4	
–16	AN508–8–5	—	. . . SCREW, mach: slot drive; RH; brass, tin pl; No. 8–32; 5/16 in lg	4	
–17	AN936A8B	—	. . . WASHER, lock: bronze, tinned; round, No. 8; shakeproof-type, tw int teeth	4	
–18	K7129147P1	—	. . . BAR, bus	1	
–19	K7874555P20	—	. . WASHER, flat	2	
	ML7129146G2	—	. . BAR SUBASSEMBLY, bus	1	
–20	AN515–8–6	—	. . SCREW, mach: slot drive; RH; steel, cad pl; No. 8–32; 3/8 in lg (Att. Pt. for ML7129146G2 and item 19)	2	
–21	AN936B8B	—	. . WASHER, lock: bronze, tinned; round, No. 8; shakeproof-type, tw ext teeth (Att. Pt. for ML7129146G2 and item 19)	2	
–22	K7129148P1	—	. . . POST, supporting	2	
–23	AN515–6R14	—	. . . SCREW, mach: Phillips drive; RH; steel, cad pl; No. 6–32; 7/8 in lg (Att. Pt.)	2	
–24	AN936B6B	—	. . . WASHER, lock: bronze, tinned; round, No. 6; shakeproof-type, tw ext teeth (Att. Pt.)	2	
–25	AN340–6	—	. . . NUT, hex: steel, cad pl; No. 6–32 (Att. Pt.)	2	
–26	AN508–8–5	—	. . . SCREW, mach: slot drive; RH; brass, tin pl; No. 8–32; 5/16 in lg	4	
–27	AN936A8B	—	. . . WASHER, lock: bronze, tinned; round, No. 8; shakeproof-type, tw int teeth	4	
–28	K7129147P1	—	. . . BAR, bus	1	
	ML7129220G2	—	. . RESISTOR ASSEMBLY, fixed	1	
–29	AN515–8–8	—	. . SCREW, mach: slot drive; RH; steel, cad pl; No. 8–32; 1/2 in lg (Att. Pt.)	2	
–30	AN936B8B	—	. . WASHER, lock: bronze, tinned; round, No. 8; shakeproof-type, tw ext teeth (Att. Pt.)	2	
–31	RC40BF224J	R9601	. . . RESISTOR, fixed	1	
–32	RC40BF224J	R9602	. . . RESISTOR, fixed	1	
	ML7129219G1	—	. . . BOARD, terminal	1	
–33	K7126106P7	—	. . . . POST, supporting	2	
–34	AN515–8–6	—	. . . . SCREW, mach: slot drive; RH; steel, cad pl; No. 8–32; 3/8 in lg (Att. Pt.)	4	
–35	AN936B8B	—	. . . . WASHER, lock: bronze, tinned; round, No. 8; shakeproof-type, tw ext teeth (Att. Pt.)	4	
–36	K7129219P2	—	. . . . PANEL	1	
–37	T100–3	—	. . . . TERMINAL, stud (Bead Chain)	4	
–38	BOHO6A120	K9601	. . RELAY, armature (Allied Cont)	1	
–39	BOHO6A120	K9602	. . RELAY, armature (Allied Cont)	1	
–40	TSB8T101	XK9601	. . SOCKET, tube	1	
–41	TSB8T101	XK9602	. . SOCKET, tube	1	
–42	AN515–4–6	—	. . SCREW, mach: slot drive; RH; steel, cad pl; No. 4–40; 3/8 in lg (Att. Pt. for items 40 and 41)	4	
–43	AN936B4B	—	. . WASHER, lock: bronze, tinned; round, No. 4; shakeproof-type, tw ext teeth (Att. Pt. for items 40 and 41)	4	
–44	AN340–4	—	. . NUT, hex: steel, cad pl; No. 4–40 (Att. Pt. for items 40 and 41)	4	
–45	926P	—	. . CLAMP (Birtcher)	2	
–46	AN515–8–6	—	. . SCREW, mach: slot drive; RH; steel, cad pl; No. 8–32; 3/8 in lg (Att. Pt.)	2	
–47	AN936B8B	—	. . WASHER, lock: bronze, tinned; round, No. 8; shakeproof-type, tw ext teeth (Att. Pt.)	2	
–48	AN340–8	—	. . NUT, hex: steel, cad pl; No. 8–32 (Att. Pt.)	2	
–49	P7771849P2	—	. . PANEL	1	
–50	AN520B10–8	—	. . SCREW, mach: slot drive; RH; brass, black oxidized; No. 10–32; 1/2 in lg (Att. Pt.)	9	
–51	AN936B10B	—	. . WASHER, lock: bronze, tinned; round, No. 10; shakeproof-type, tw ext teeth (Att. Pt.)	9	
–52	AN345–10	—	. . NUT, hex: steel, cad pl; No. 10–32 (Att. Pt.)	9	
–53	K7002870P1	—	. . HANDLE	2	
–54	K7002869P1	—	. . WASHER, extruded	4	
–55	AN345–10	—	. . NUT, hex: steel, cad pl; No. 10–32 (Att. Pt. for items 53 and 54)	4	
–56	AN936B10B	—	. . WASHER, lock: bronze, tinned; round, No. 10; shakeproof-type, tw ext teeth (Att. Pt. for items 53 and 54)	4	
–57	801006–517	XI9601	. . LIGHT, indicator (Dialco)	1	
–58	Coml	I9601	. . LAMP, glow: Mazda NE16, 110 v, 1/4 w	1	
–59	801006–517	XI9602	. . LIGHT, indicator (Dialco)	1	
	Coml	I9602	. . LAMP, glow: Mazda NE16, 10 v, 1/4 w (Ref item 58)	1	
–60	NP125992R	—	. . PLATE, identification	1	
–61	NP125992S	—	. . PLATE, identification	1	
–62	NP136331A	—	. . PLATE, identification	1	
–63	Coml	—	. . SCREW, self-tapping: Phillips drive; Bind H; SS, black oxidized; No. 4–40; 3/16 in lg (Att. Pt. for items 60, 61 and 62) (Shakeproof)	8	
–64	P7771850P2	—	. . GUSSET	1	
–65	P7771850P1	—	. . GUSSET	1	
–66	AN520–10–8	—	. . SCREW, mach: slot drive; RH; steel, cad pl; No. 10–32; 1/2 in lg (Att. Pt. for items 64 and 65)	10	
–67	AN936B10B	—	. . WASHER, lock: bronze, tinned; round, No. 10; shakeproof-type, tw ext teeth (Att. Pt. for items 64 and 65)	10	
–68	AN345–10	—	. . NUT, hex: steel, cad pl; No. 10–32 (Att. Pt. for items 64 and 65)	10	

FIG. & INDEX NO.	PART NUMBER	REF SYMBOL	NOMENCLATURE 1 2 3 4 5 6 7	UNITS PER ASSY	APPLI-CATION
			RADAR MODULATOR MD-99/CPS-6B		
66-	ML7352786G1	—	RADAR MODULATOR MD-99/CPS-6B	1	
-1	ML7300316G1	—	. CABINET (See Figure 67 for breakdown)	1	
-2	ML7664861G1	—	. TRIGGER AMPLIFIER AM-268/CPS-6B (See Figure 68 for breakdown)	1	
-3	AN3057-6	—	. CLAMP	1	
	ML7400865G1	W10003	. CABLE ASSEMBLY, RF	1	
-4	K105	—	. . CABLE, RF: 34 in lg (Fed Tele & Rad, Intelin Div)	1	
-5	UG260/U	P10004D	. . CONNECTOR, plug	1	
-6	UG260/U	P10601	. . CONNECTOR, plug	1	
-7	NP125767M	—	. . MARKER, cable	1	
-8	NP125767N	—	. . MARKER, cable	1	
-9	NP125719Z	—	. . MARKER, cable	1	
	ML7400866G1	W10004	. CABLE ASSEMBLY, RF	1	
-10	K105	—	. . CABLE, RF: 48 in lg (Fed Tele & Rad, Intelin Div)	1	
-11	UG260/U	P10602	. . CONNECTOR, plug	1	
-12	UG262/U	J10008	. . CONNECTOR, receptacle	1	
-13	NP125767P	—	. . MARKER, cable	1	
	ML7400866G2	W10005	. CABLE ASSEMBLY, RF	1	
-14	K105	—	. . CABLE, RF: 48 in lg (Fed Tele & Rad, Intelin Div)	1	
-15	UG260/U	P10603	. . CONNECTOR, plug	1	
-16	UG262/U	J10009	. . CONNECTOR, receptacle	1	
-17	NP125767R	—	. . MARKER, cable	1	
	ML7400863G1	W10001	. CABLE ASSEMBLY, RF	1	
-18	AN515-4-10	—	. SCREW, mach: slot drive; RH; steel, cad pl; No. 4-40; 5/8 in lg (Att. Pt.)	1	
-19	AN936A4B	—	. WASHER, lock: bronze, tinned; round, No. 4; shakeproof-type, tw int teeth (Att. Pt.)	1	
-20	AN340-4	—	. NUT, hex: steel, cad pl; No. 4-40 (Att. Pt.)	1	
-21	RG59/U	—	. . CABLE, RF: 70 in lg	1	
-22	K7129230	E10005	. . HANGER, cable	1	
-23	UG262/U	J10005	. . CONNECTOR, receptacle	1	
-24	CW-123/U	—	. CAP AND CHAIN SUBASSEMBLY	3	
-25	AN520B3-6	—	. SCREW, mach: slot drive; RH; brass, black oxidized; No. 3-56; 3/8 in lg (Att. Pt. for items 12, 16, 23 and 24)	3	
-26	AN520B3-5	—	. SCREW, mach: slot drive; RH; brass, black oxidized; No. 3-56; 5/16 in lg (Att. Pt. for items 12, 16 and 23)	9	
-27	1203	—	. WASHER, lock (Att. Pt. for items 12, 16, 23 and 24) (Shakeproof)	12	
-28	ML7354001G1	S10001	. MODULATOR, radar (See Figure 69 for breakdown)	1	
-29	Coml	—	. SCREW, mach: slot drive; hex head; brass, cad pl; 1/4 in-20; 1/2 in lg (Att. Pt.) (Amer Screw)	4	
-30	AN936B416B	—	. WASHER, lock: bronze, tinned; round, 1/4 in; shakeproof-type, tw ext teeth (Att. Pt.)	4	
-31	AN340-416	—	. NUT, hex: steel, cad pl; 1/4 in-20 (Att. Pt.)	4	
-32	K7000163P1	—	. LEAD, electrical	1	
-33	AN515-6-5	—	. SCREW, mach: slot drive; RH; steel, cad pl; No. 6-32; 5/16 in lg (Att. Pt.)	1	
-33A	AN505-6-5	—	. SCREW, mach: slot drive; FH; steel, cad pl; No. 6-32; 5/16 in lg (Att. Pt.)	1	
-34	AN936B6B	—	. WASHER, lock: bronze, tinned; round, No. 6; shakeproof-type, tw ext teeth (Att. Pt.)	2	
-35	AN340-6	—	. NUT, hex: steel, cad pl; No. 6-32 (Att. Pt.)	2	
-36	P7772516P1	—	. CHASSIS	1	
-37	AN515-416-10	—	. SCREW, mach: slot drive; RH; steel, cad pl; 1/4 in-20; 5/8 in lg (Att. Pt.)	3	
-38	AN936A416B	—	. WASHER, lock: bronze, tinned; round, 1/4 in; shakeproof-type, tw ext teeth (Att. Pt.)	3	
-39	AN515-4-4	—	. SCREW, mach: slot drive; RH; steel, cad pl; No. 4-40; 1/4 in lg (Att. Pt.)	3	
-40	AN936A4B	—	. WASHER, lock: bronze, tinned; round, No. 4; shakeproof-type, tw int teeth (Att. Pt.)	3	
-41	36002	—	. CLIP (Millen)	2	
-42	AN520-10-5	—	. SCREW, mach: slot drive; RH; steel, cad pl; No. 10-32; 5/16 in lg (Att. Pt.)	2	
-43	AN936B10B	—	. WASHER, lock: bronze, tinned; round, No. 10; shakeproof-type, tw ext teeth (Att. Pt.)	2	
-44	371B	V10005	. TUBE, electron	1	
-45	371B	V10006	. TUBE, electron	1	
-46	211SB	XV10006	. SOCKET, tube (Johnson E F)	1	
-47	211SB	XV10005	. SOCKET, tube (Johnson E F)	1	
-48	K7874555P17	—	. WASHER, flat	4	
-49	AN520-10-18	—	. SCREW, mach: slot drive; RH; steel, cad pl; No. 10-32; 1-1/8 in lg (Att. Pt. for items 46, 47 and 48)	4	
-50	Coml	—	. WASHER, flat: brass; round, 13/64 in ID, 9/16 in OD, 0.040 in thk (Att. Pt. for items 46, 47 and 48) (Wrought Washer)	8	
-51	AN936B10B	—	. WASHER, lock: bronze, tinned; round, No. 10; shakeproof-type, tw ext teeth (Att. Pt. for items 46, 47 and 48)	4	
-52	AN345-10	—	. NUT, hex: steel, cad pl; No. 10-32 (Att. Pt. for items 46, 47 and 48)	4	
-53	M2R53P11	—	. GROMMET	1	
-54	K7128740P1	—	. INSULATOR, standoff	3	
-55	AN515-416-10	—	. SCREW, mach: slot drive; RH; steel, cad pl; 1/4 in-20; 5/8 in lg (Att. Pt.)	3	
-56	AN936B416B	—	. WASHER, lock: bronze, tinned; round, 1/4 in; shakeproof-type, tw ext teeth (Att. Pt.)	3	
-57	M7400832P1	—	. CHASSIS	1	
-58	AN515-416-10	—	. SCREW, mach: slot drive; RH; steel, cad pl; 1/4 in-20; 5/8 in lg (Att. Pt.)	3	
-59	AN936B416B	—	. WASHER, lock: bronze, tinned; round, 1/4 in; shakeproof-type, tw ext teeth (Att. Pt.)	3	
-60	36002	—	. CLIP (Millen)	1	
-61	371B	V10007	. TUBE, electron	1	
-62	M2R53P16	—	. GROMMET	1	
-63	P7700708P2	B10002	. BLOWER (See Figure 54 for breakdown)	1	
-64	AN340-10	—	. NUT, hex: steel, cad pl; No. 10-24 (Att. Pt.)	4	

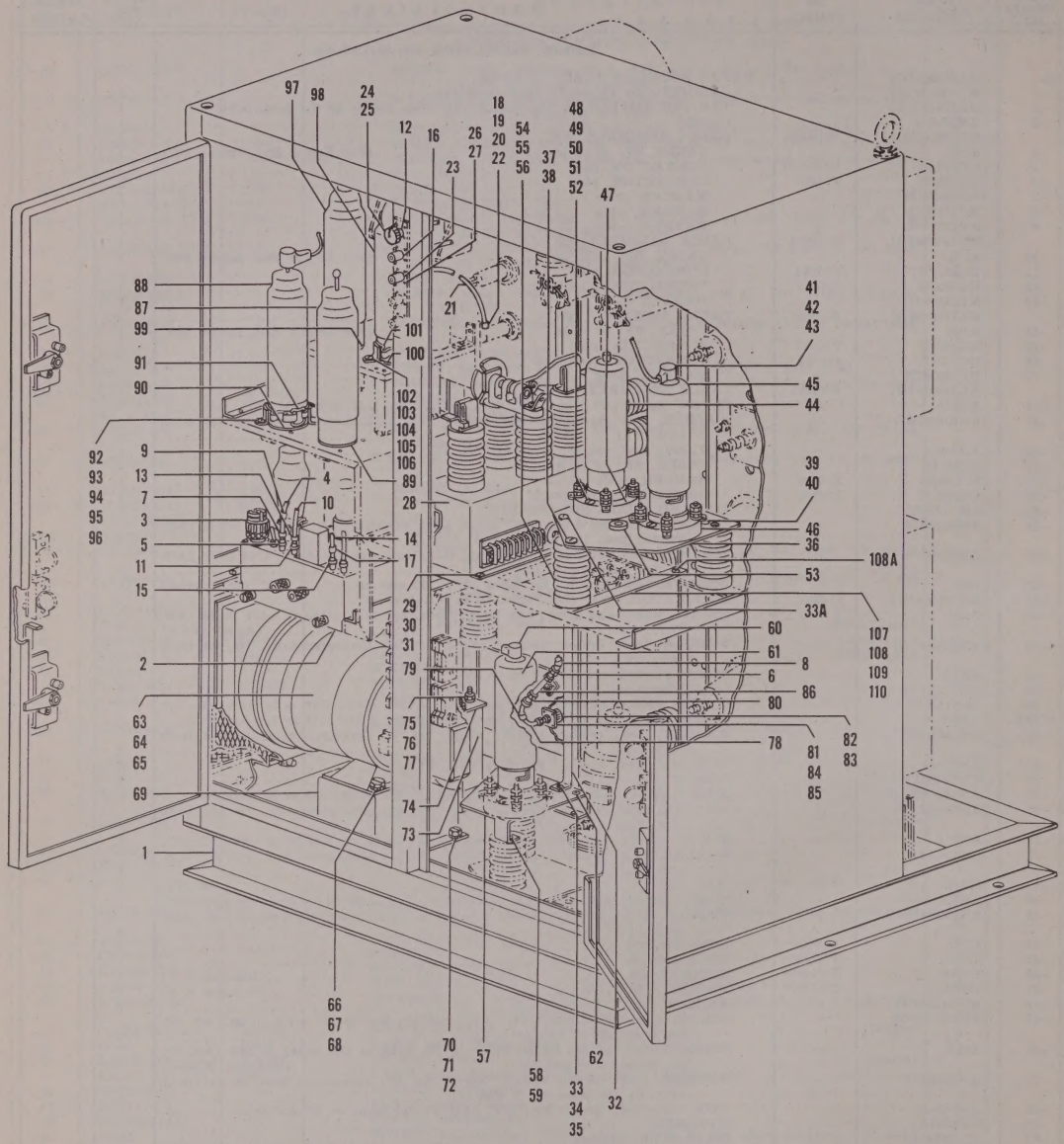

Figure 66. Radar Modulator MD–99/CPS–6B, Front View (Sheet 1 of 5 sheets, Index Nos. 1 thru 110)

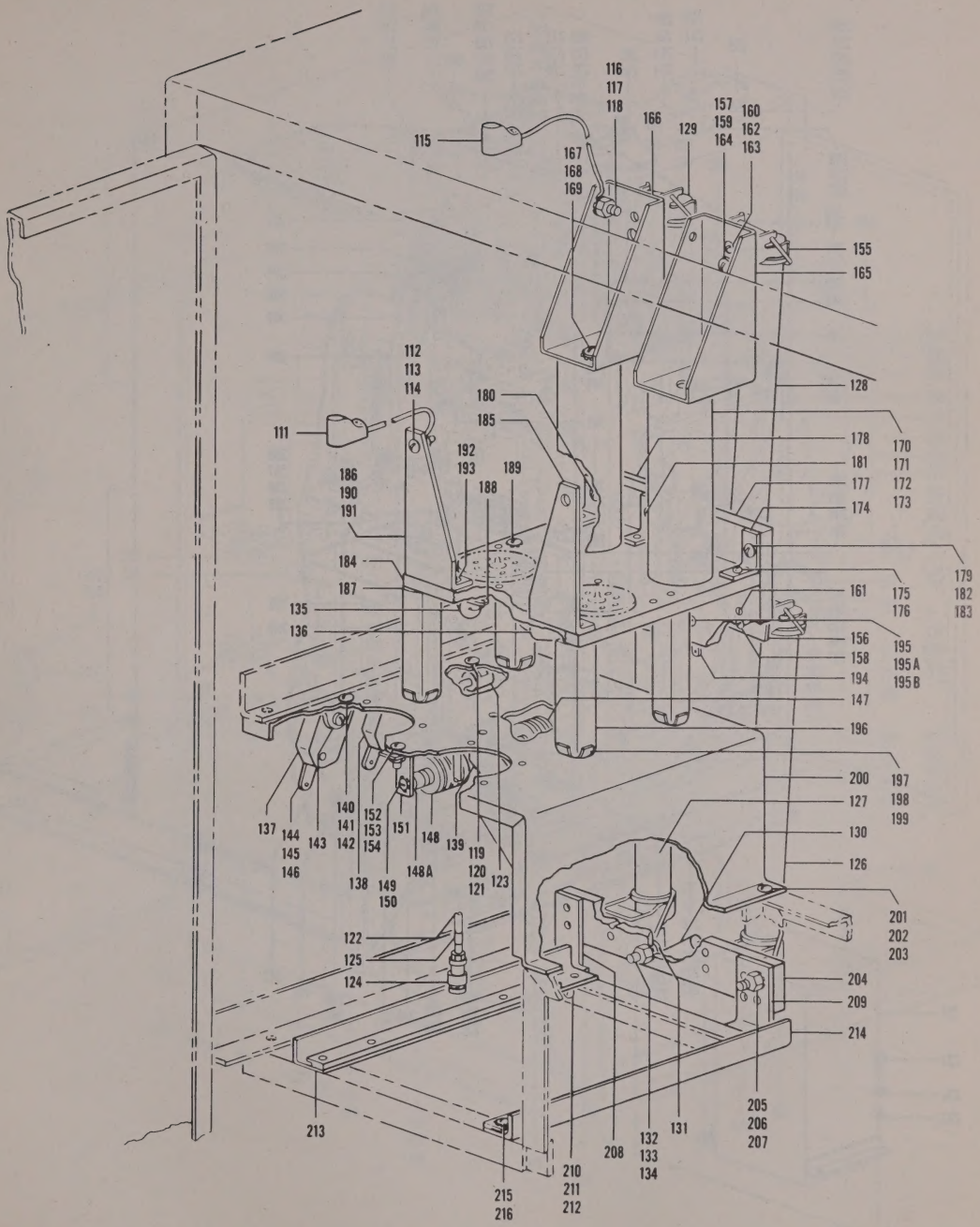

Figure 66. Radar Modulator MD-99/CPS-6B, Partial Front View (Sheet 2 of 5 sheets, Index Nos. 111 thru 216)

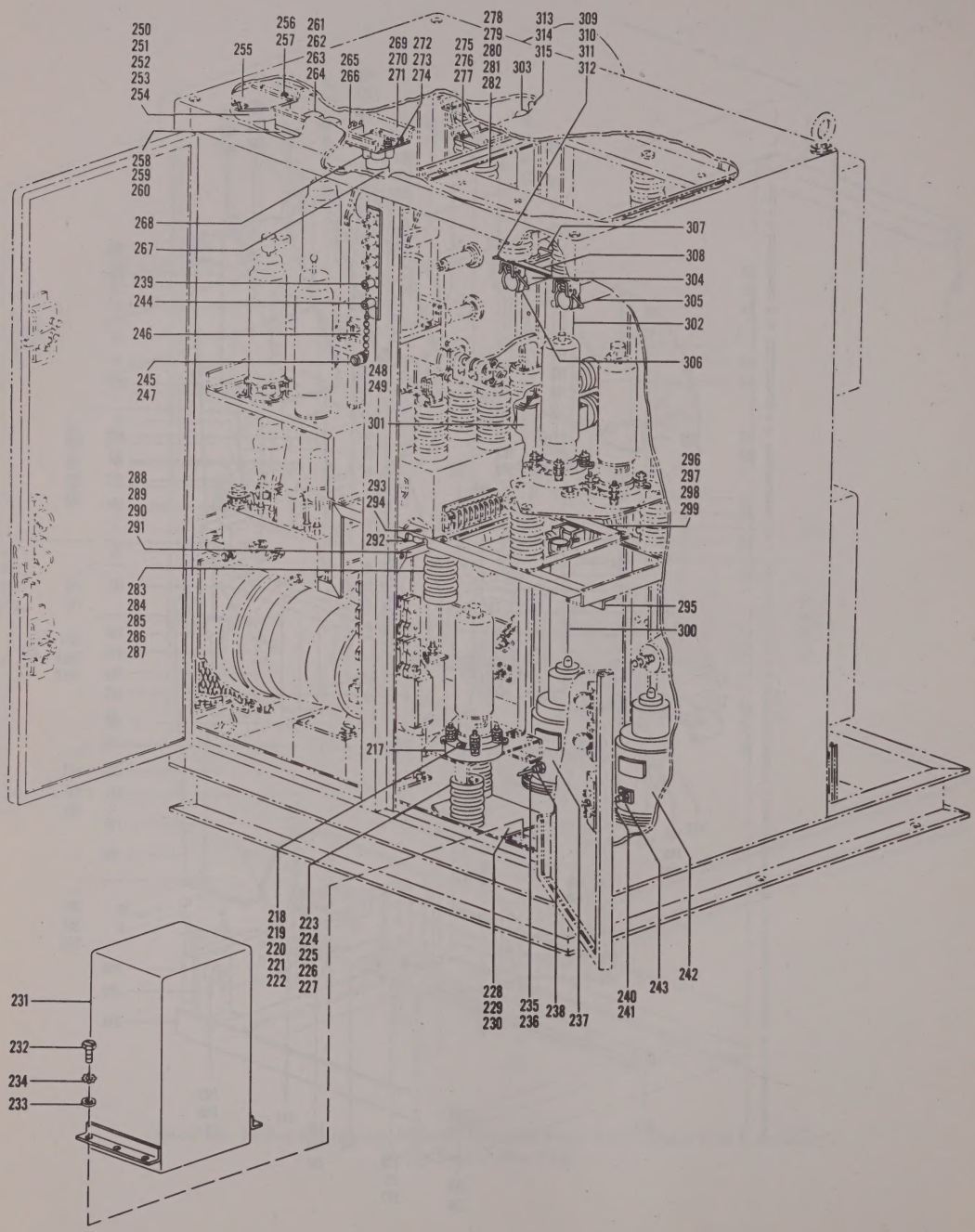

Figure 66. Radar Modulator MD–99/CPS–6B, Front View (Sheet 3 of 5 sheets, Index Nos. 217 thru 315)

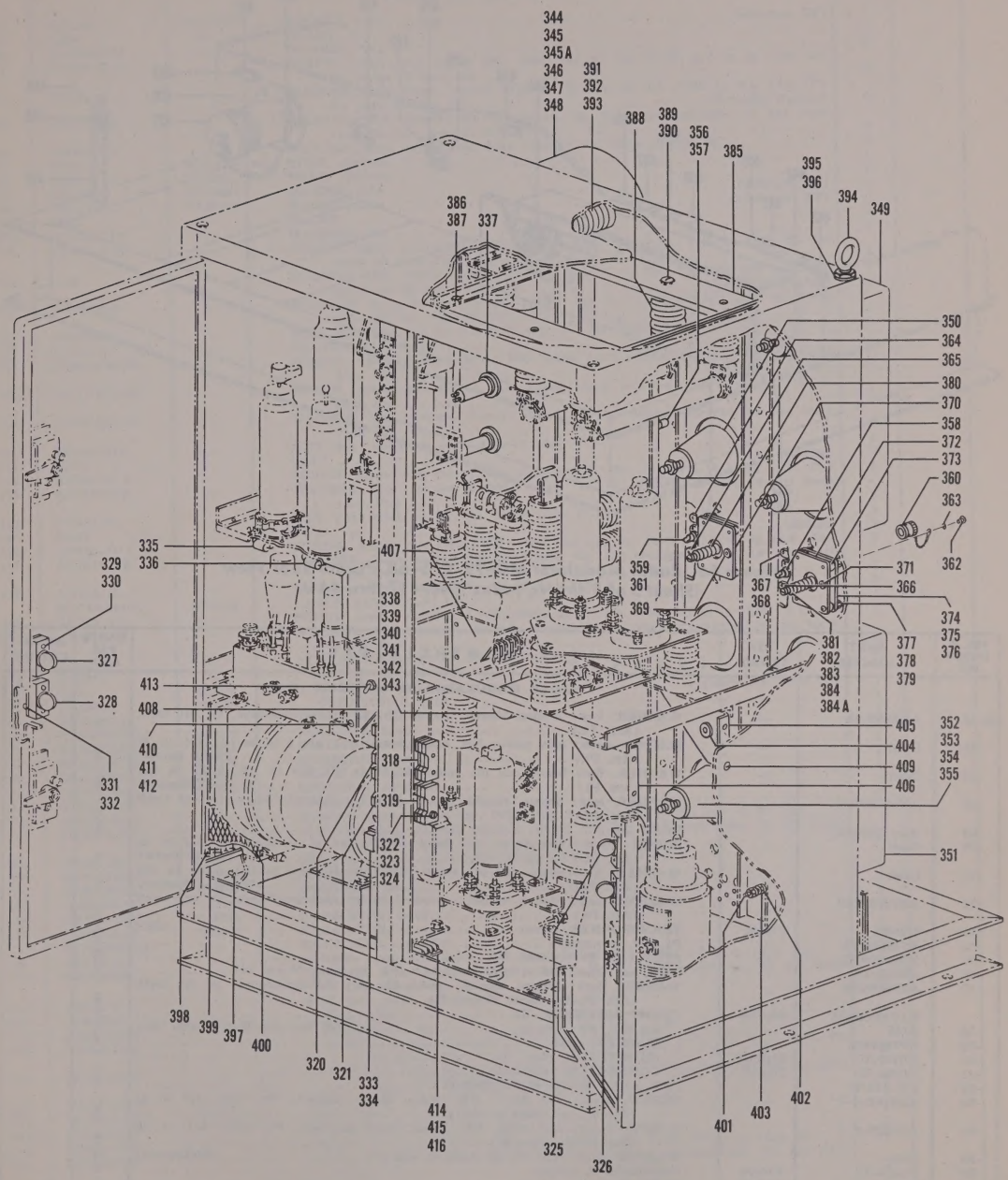

Figure 66. Radar Modulator MD-99/CPS-6B, Front View (Sheet 4 of 5 sheets, Index Nos. 318 thru 416)

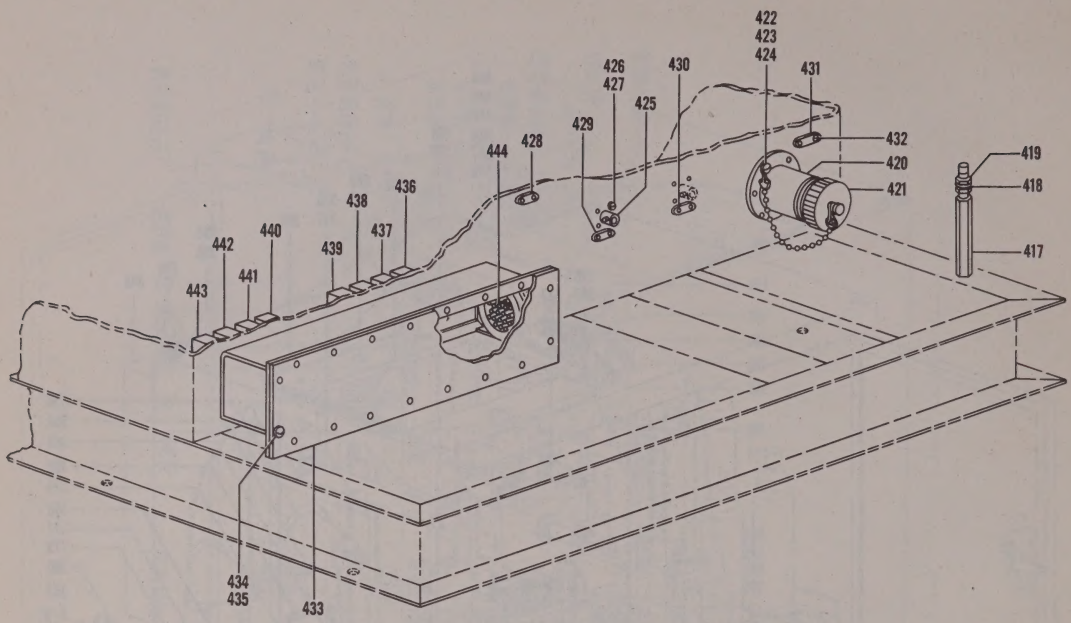

Figure 66. Radar Modulator MD-99/CPS-6B, Partial Rear View (Sheet 5 of 5 sheets, Index Nos. 417 thru 444)

FIG. & INDEX NO.	PART NUMBER	REF SYMBOL	NOMENCLATURE 1 2 3 4 5 6 7	UNITS PER ASSY	APPLI-CATION
			RADAR MODULATOR MD-99/CPS-6B (Cont)		
66-65	AN936B10B	—	. WASHER, lock: bronze, tinned; round, No. 10; shakeproof-type, tw ext teeth (Att. Pt.)	4	
-66	Coml	—	. SCREW, mach: slot drive; hex head; brass, cad pl; 5/16 in-18; 3/4 in lg (Att. Pt.) (Amer Screw)	4	
-67	Coml	—	. WASHER, flat: brass, cad pl; round, 11/32 in ID, 5/8 in OD, 0.063 in thk (Att. Pt.) (Wrought Washer)	4	
-68	AN936B516B	—	. WASHER, lock: bronze, tinned; round, 5/16 in; shakeproof-type, tw ext teeth (Att. Pt.)	4	
-69	ML7772506G1	—	. BASE, motor	1	
-70	Coml	—	. SCREW, mach: slot drive; hex head; brass, cad pl; 5/16 in-18; 5/8 in lg (Att. Pt.) (Amer Screw)	4	
-71	Coml	—	. WASHER, flat: brass, cad pl; round, 11/32 in ID, 5/8 in OD, 0.063 in thk (Att. Pt.) (Wrought Washer)	4	
-72	AN936B516B	—	. WASHER, lock: bronze, tinned; round, 5/16 in; shakeproof-type, tw ext teeth (Att. Pt.)	4	
-73	7480421	T10002	. TRANSFORMER, power (GE)	1	
-74	M7482890P1	—	. PLATE, mounting	1	
-75	K7028299P1	—	. STUD (Att. Pt. for item 74)	2	
-76	AN345-10	—	. NUT, hex: steel, cad pl; No. 10-32 (Att. Pt. for items 73 and 74)	6	
-77	AN936B10B	—	. WASHER, lock: bronze, tinned; round, No. 10; shakeproof-type, tw ext teeth (Att. Pt. for items 73 and 74)	6	
	ML7400866G3	W10008	. CABLE ASSEMBLY, RF	1	
-78	K105	—	. . CABLE, RF: 8 in lg (Fed Tele and Rad, Intelin Div)	1	
-79	NP125767S	—	. . MARKER, cable	1	
-80	UG260/U	P10004C	. . CONNECTOR, plug	1	
-81	UG262/U	J10014	. . CONNECTOR, receptacle	1	
-82	CW-123/U	—	. CAP AND CHAIN SUBASSEMBLY	1	
-83	AN520B-3-6	—	. SCREW, mach: slot drive; RH; brass, black oxidized; No. 3-56; 3/8 in lg (Att. Pt. for items 81 and 82)	1	
-84	AN520B-3-5	—	. SCREW, mach: slot drive, RH; brass, black oxidized; No. 3-56; 5/16 in lg (Att. Pt. for item 81)	3	
-85	1203	—	. WASHER, lock (Att. Pt. for items 81 and 82) (Shakeproof)	4	
-86	UG274/U	E10004	. CONNECTOR, adapter	1	
-87	5C22	V10003	. TUBE, electron	1	
-88	5C22	V10004	. TUBE, electron	1	
-89	122-244	XV10003	. SOCKET, tube (Johnson EF)	1	

FIG. & INDEX NO.	PART NUMBER	REF SYMBOL	NOMENCLATURE 1 2 3 4 5 6 7	UNITS PER ASSY	APPLI-CATION
			RADAR MODULATOR MD-99/CPS-6B (Cont)		
66-90	122-244	XV10004	. SOCKET, tube (Johnson EF)	1	
-91	926G	—	. CLAMP	2	
-92	K7872443P1	—	. WASHER, flat	8	
-93	AN515-8-12	—	. SCREW, mach: slot drive; RH; steel, cad pl; No. 8-32; 3/4 in lg (Att. Pt. for items 89 thru 92)	8	
-94	Coml	—	. WASHER, flat: brass; round, 3/16 in ID, 1/2 in OD, 0.040 in thk (Att. Pt. for items 89 thru 92) (Wrought Washer)	8	
-95	AN936B8B	—	. WASHER, lock: bronze, tinned; round, No. 8; shakeproof-type, tw ext teeth (Att. Pt. for items 89 thru 92)	8	
-96	AN340-8	—	. NUT, hex: steel, cad pl; No. 8-32 (Att. Pt. for items 89 thru 92)	8	
-97	5C22	V10001	. TUBE, electron	1	
-98	5C22	V10002	. TUBE, electron	1	
-99	122-244	XV10001	. SOCKET, tube (Johnson EF)	1	
-100	122-244	XV10002	. SOCKET, tube (Johnson EF)	1	
-101	926G	—	. CLAMP	2	
-102	K7872443P1	—	. WASHER, flat	8	
-103	AN515-8-16	—	. SCREW, mach: slot drive; RH; steel, cad pl; No. 8-32; 1 in lg (Att. Pt. for items 99 thru 102)	8	
-104	Coml	—	. WASHER, flat: brass; round, 3/16 in ID, 1/2 in OD, 0.040 in thk (Att. Pt. for items 99 thru 102) (Wrought Washer)	8	
-105	AN936B8B	—	. WASHER, lock: bronze, tinned; round, No. 8; shakeproof-type, tw ext teeth (Att. Pt. for items 99 thru 102)	8	
-106	AN340-8	—	. NUT, hex: steel, cad pl; No. 8-32 (Att. Pt. for items 99 thru 102)	8	
-107	K7001571	—	. PLATE, reinforcing	1	
-108	AN505B416R8	—	. SCREW, mach: Phillips drive; FH; brass, black oxidized; 1/4 in-20; 1/2 in lg (Att. Pt.)	1	
-108A	AN515B416R8	—	. SCREW, mach: slot drive; RH; brass, black oxidized; 1/4 in-20; 1/2 in lg (Att. Pt.)	1	
-109	AN936B416B	—	. WASHER, lock: bronze, tinned; round, 1/4 in; shakeproof-type, tw ext teeth (Att. Pt.)	2	
-110	AN340-416	—	. NUT, hex: steel, cad pl; 1/4 in-20 (Att. Pt.)	2	
-111	36001	—	. CLIP (Millen)	2	
-112	AN520-10-5	—	. SCREW, mach: slot drive; RH; steel, cad pl; No. 10-32; 5/16 in lg (Att. Pt.)	2	
-113	AN936B10B	—	. WASHER, lock: bronze, tinned; round, No. 10; shakeproof-type, tw ext teeth (Att. Pt.)	2	
-114	AN345-10	—	. NUT, hex: steel, cad pl; No. 10-32 (Att. Pt.)	2	
-115	36001	—	. CLIP (Millen)	2	
-116	AN520-10-7	—	. SCREW, mach: slot drive; RH; steel, cad pl; No. 10-32; 7/16 in lg (Att. Pt.)	2	
-117	AN936B10B	—	. WASHER, lock: bronze, tinned, round, No. 10; shakeproof-type, tw ext teeth (Att. Pt.)	2	
-118	AN345-10	—	. NUT, hex: steel, cad pl; No. 10-32 (Att. Pt.)	2	
	ML7400864G1	W10002	. CABLE ASSEMBLY, RF	1	
-119	AN515-4-6	—	. SCREW, mach: slot drive; RH; steel, cad pl; No. 4-40; 3/8 in lg (Att. Pt.)	1	
-120	AN936A4B	—	. WASHER, lock: bronze, tinned; round, No. 4; shakeproof-type, tw int teeth (Att. Pt.)	1	
-121	AN340-4	—	. NUT, hex: steel, cad pl; No. 4-40 (Att. Pt.)	1	
-122	RG59/U	—	. . CABLE, RF: 35 in lg	1	
-123	9175	E10006	. . HANGER, cable (Industrial Prod Co)	1	
-124	UG260/U	P10605	. . CONNECTOR, plug	1	
-125	NP125767L	—	. . MARKER, cable	1	
-126	M7480938P14	R10003	. RESISTOR, fixed	1	
-127	M7480938P14	R10004	. RESISTOR, fixed	1	
-128	M7480938P14	R10002	. RESISTOR, fixed	1	
-129	M7480938P14	R10001	. RESISTOR, fixed	1	
-130	RC40BF333J	R10009	. RESISTOR, fixed	1	
-131	K7869410P1	—	. TERMINAL, lug	2	
-132	AN520-10-10	—	. SCREW, mach: slot drive; RH; steel, cad pl; No. 10-32; 5/8 in lg (Att. Pt.)	2	
-133	AN936B10B	—	. WASHER, lock: bronze, tinned; round, No. 10; shakeproof-type, tw ext teeth (Att. Pt.)	2	
-134	AN345-10	—	. NUT, hex: steel, cad pl; No. 10-32 (Att. Pt.)	2	
-135	RC20BF223J	R10005	. RESISTOR, fixed	1	
-136	RC20BF223J	R10006	. RESISTOR, fixed	1	
-137	CM55B101K	C10002	. CAPACITOR, fixed	1	
-138	CM55B101K	C10003	. CAPACITOR, fixed	1	
-139	CM55B101K	C10004	. CAPACITOR, fixed	1	
	ML7876997G1	—	. MOUNTING, capacitor	3	
-140	AN515-6-6	—	. SCREW, mach: slot drive; RH; steel, cad pl; No. 6-32; 3/8 in lg (Att. Pt.)	3	
-141	AN936B6B	—	. WASHER, lock: bronze, tinned; round, No. 6; shakeproof-type, tw ext teeth (Att. Pt.)	3	
-142	AN340-6	—	. NUT, hex: steel, cad pl; No. 6-32 (Att. Pt.)	3	
-143	K7873976	—	. . BRACKET	1	
-144	K7861852P1	—	. . TERMINAL, lug	1	
-145	AN515-6-4	—	. . SCREW, mach: slot drive; RH; steel, cad pl; No. 6-32; 1/4 in lg (Att. Pt. for items 143 and 144)	3	
-146	AN936A6B	—	. . WASHER, lock: bronze ,tinned; round, No. 6; shakeproof-type, tw int teeth (Att. Pt. for items 143 and 144)	3	
-147	ML7481097G1	L10003	. COIL, RF	1	
-148	ML7481097G1	L10002	. COIL, RF	1	
-148A	K7874555P17	—	. WASHER, flat	2	
-149	AN515-8-6	—	. SCREW, mach: slot drive; RH; steel, cad pl; No. 8-32; 3/8 in lg (Att. Pt.)	2	
-150	AN936B8B	—	. WASHER, lock: bronze, tinned; round, No. 8; shakeproof-type, tw ext teeth (Att. Pt.)	2	
-151	K7989133P1	—	. BRACKET	2	
-152	AN515-6-6	—	. SCREW, mach: slot drive; RH; steel, cad pl; No. 6-32; 3/8 in lg (Att. Pt.)	4	

FIG. & INDEX NO.	PART NUMBER	REF SYMBOL	NOMENCLATURE 1 2 3 4 5 6 7	UNITS PER ASSY	APPLI-CATION
			RADAR MODULATOR MD–99/CPS–6B (Cont)		
66–153	AN936B6B	—	. WASHER, lock: bronze, tinned; round, No. 6; shakeproof-type, tw ext teeth (Att. Pt.)	4	
–154	AN340–6	—	. NUT, hex: steel, cad pl; No. 6–32 (Att. Pt.)	4	
–155	K17–7A	—	. CLIP (Trumbull)	8	
–156	K7000148P1	—	. BAR, bus	2	
–157	AN515–416–8	—	. SCREW, mach: slot drive; RH; steel, cad pl; 1/4 in–20; 1/2 in lg (Att. Pt. for items 155 and 156)	2	
–158	AN515–416–12	—	. SCREW, mach: slot drive; RH; steel, cad pl; 1/4 in–20; 3/4 in lg (Att. Pt. for items 155 and 156)	6	
–159	AN936A416B	—	. WASHER, lock: bronze, tinned; round, 1/4 in; shakeproof-type, tw int teeth (Att. Pt. for items 155 and 156)	8	
–160	AN515–4–7	—	. SCREW, mach: slot drive; RH; steel, cad pl; No. 4–40; 7/16 in lg (Att. Pt. for items 155 and 156)	2	
–161	AN515–4–12	—	. SCREW, mach: slot drive; RH; steel, cad pl; No. 4–40; 3/4 in lg (Att. Pt. for items 155 and 156)	6	
–162	AN936A4B	—	. WASHER, lock: bronze, tinned; round, No. 4; shakeproof-type, tw int teeth (Att. Pt. for items 155 and 156)	8	
–163	Coml	—	. WASHER, flat: brass, cad pl; round, 1/8 in ID, 1/4 in OD, 0.032 in thk (Att. Pt. for items 155 and 156)	8	
–164	K7000076P1	—	. NUT, anchor (Att. Pt. for items 155 and 156)	8	
–165	M7400815P2	—	. BRACKET	1	
–166	M7400815P1	—	. BRACKET	1	
–167	K7874555P17	—	. WASHER, flat	8	
–168	AN520–10–7	—	. SCREW, mach: slot drive; RH; steel, cad pl; No. 10–32; 7/16 in lg (Att. Pt. for items 165, 166 and 167)	8	
–169	AN936B10B	—	. WASHER, lock: bronze, tinned; round, No. 10; shakeproof-type, tw ext teeth (Att. Pt. for items 165, 166 and 167)	8	
–170	NS4W0640	—	. INSULATOR, standoff	2	
–171	K7874555P17	—	. WASHER, flat	8	
–172	AN520–10–12	—	. SCREW, mach: slot drive; RH; steel, cad pl; No. 10–32; 3/4 in lg (Att. Pt. for items 170 and 171)	8	
–173	AN936B10B	—	. WASHER, lock: bronze, tinned; round, No. 10; shakeproof-type, tw ext teeth (Att. Pt. for items 170 and 171)	8	
–174	K7000102P1	—	. BRACKET	4	
–175	AN520–10–12	—	. SCREW, mach: slot drive; RH; steel, cad pl; No. 10–32; 3/4 in lg (Att. Pt.)	4	
–176	AN345–10	—	. NUT, hex: steel, cad pl; No. 10–32 (Att. Pt.)	4	
–177	M7400808P1	—	. PLATE, mounting	1	
–178	K7000018P1	—	. BAR, bus	1	
–179	AN520–10–12	—	. SCREW, mach: slot drive; RH; steel, cad pl; No. 10–32; 3/4 in lg (Att. Pt. for item 177)	2	
–180	AN520–10–16	—	. SCREW, mach: slot drive; RH; steel, cad pl; No. 10–32; 1 in lg (Att. Pt. for items 177 and 178)	1	
–181	AN520–10–14	—	. SCREW, mach: slot drive; RH; steel, cad pl; No. 10–32; 7/8 in lg (Att. Pt. for items 177 and 178)	2	
–182	AN936B10B	—	. WASHER, lock: bronze, tinned; round, No. 10; shakeproof-type, tw ext teeth (Att. Pt. for items 177 and 178)	5	
–183	AN345–10	—	. NUT, hex: steel, cad pl; No. 10–32 (Att. Pt. for items 177 and 178)	7	
–184	P7771492P1	—	. PLATE, mounting	1	
–185	K7028263P2	—	. BRACKET	1	
–186	K7028263P1	—	. BRACKET	1	
–187	K7874555P17	—	. WASHER, flat	4	
–188	K7869410P1	—	. TERMINAL, lug	12	
–189	AN520–10–12	—	. SCREW, mach: slot drive; RH; steel, cad pl; No. 10–32; 3/4 in lg (Att. Pt. for items 184 and 188)	2	
–190	AN520–10–14	—	. SCREW, mach: slot drive; RH; steel, cad pl; No. 10–32; 7/8 in lg (Att. Pt. for items 184 thru 187)	2	
–191	AN936B10B	—	. WASHER, lock: bronze, tinned; round, No. 10; shakeproof-type, tw ext teeth (Att. Pt. for items 184 thru 188)	4	
–192	AN520–10–16	—	. SCREW, mach: slot drive; RH; steel, cad pl; No. 10–32; 1 in lg (Att. Pt. for items 185, 186 and 188)	2	
–193	AN345–10	—	. NUT, hex: steel, cad pl; No. 10–32 (Att. Pt. for items 185, 186 and 188)	2	
–194	K7869410P1	—	. TERMINAL, lug	2	
–195	AN520–10–16	—	. SCREW, mach: slot drive; RH; steel, cad pl; No. 10–16; 1 in lg (Att. Pt.)	2	
–195A	AN936B10B	—	. WASHER, lock: bronze, tinned; round, No. 10; shakeproof-type, tw ext teeth (Att. Pt.)	2	
–195B	AN345–10	—	. NUT, hex: steel, cad pl; No. 10–32 (Att. Pt.)	2	
–196	NS4W1224	—	. INSULATOR, standoff	4	
–197	K7107772P1	—	. CLIP	4	
–198	AN520–10–7	—	. SCREW, mach: slot drive; RH; steel, cad pl; No. 10–32; 7/16 in lg (Att. Pt. for items 196 and 197)	4	
–199	AN936B10B	—	. WASHER, lock: bronze, tinned; round, No. 10; shakeproof-type, tw ext teeth (Att. Pt. for items 196 and 197)	4	
–200	ML7772509G1	—	. CHASSIS	1	
–201	AN515–416–8	—	. SCREW, mach: slot drive; RH; steel, cad pl; 1/4 in–20; 1/2 in lg (Att. Pt.)	4	
–202	AN936B416B	—	. WASHER, lock: bronze, tinned; round, 1/4 in; shakeproof-type, tw ext teeth (Att. Pt.)	4	
–203	AN340–416	—	. NUT, hex: steel, cad pl; 1/4 in–20 (Att. Pt.)	4	
–204	M7400809P1	—	. PLATE, mounting	1	
–205	AN520–10–12	—	. SCREW, mach: slot drive; RH; steel, cad pl; No. 10–32; 3/4 in lg (Att. Pt.)	6	
–206	AN936B10B	—	. WASHER, lock: bronze, tinned; round, No. 10; shakeproof-type, tw ext teeth (Att. Pt.)	6	
–207	AN345–10	—	. NUT, hex: steel, cad pl; No. 10–32 (Att. Pt.)	6	
–208	K7004551P1	—	. BRACKET	1	
–209	K7004550P1	—	. BRACKET	1	

FIG. & INDEX NO.	PART NUMBER	REF SYMBOL	NOMENCLATURE 1 2 3 4 5 6 7	UNITS PER ASSY	APPLI-CATION
			RADAR MODULATOR MD-99/CPS-6B (Cont)		
66-210	AN515-8-8	—	. SCREW, mach: slot drive; RH; steel, cad pl; No. 8-32; 1/2 in lg (Att. Pt. for items 208 and 209)	6	
-211	AN936B8B	—	. WASHER, lock: bronze, tinned; round, No. 8; shakeproof-type, tw ext teeth (Att. Pt. for items 208 and 209)	6	
-212	AN340-8	—	. NUT, hex: steel, cad pl; No. 8-32 (Att. Pt. for items 208 and 209)	6	
-213	ML7772512G1	—	. RAIL SUBASSEMBLY, guide	1	
-214	ML7772514G1	—	. RAIL SUBASSEMBLY, guide	1	
-215	AN515-416-8	—	. SCREW, mach: slot drive; RH; steel, cad pl; 1/4 in-20; 1/2 in lg (Att. Pt. for items 213 and 214)	4	
-216	AN936B416B	—	. WASHER, lock: bronze, tinned; round, 1/4 in; shakeproof-type, tw ext teeth (Att. Pt. for items 213 and 214)	4	
-217	211SB	XV1007	. SOCKET, tube (Johnson EF)	1	
-218	K7874555P17	—	. WASHER, flat	2	
-219	AN520-10-18	—	. SCREW, mach: slot drive; RH; steel, cad pl; No. 10-32; 1-1/8 in lg (Att. Pt. for items 217 and 218)	2	
-220	Coml	—	. WASHER, flat: brass; round, 13/64 in ID, 9/16 in OD, 0.040 in thk (Att. Pt. for items 217 and 218) (Wrought Washer)	4	
-221	AN936B10B	—	. WASHER, lock: bronze, tinned; round, No. 10; shakeproof-type, tw ext teeth (Att. Pt. for items 217 and 218)	2	
-222	AN345-10	—	. NUT, hex: steel, cad pl; No. 10-32 (Att. Pt. for items 217 and 218)	2	
-223	K7128740P1	—	. INSULATOR, standoff	3	
-224	AN515-416-10	—	. SCREW, mach: slot drive; RH; steel, cad pl; 1/4 in-20; 5/8 in lg (Att. Pt.)	3	
-225	AN936A416B	—	. WASHER, lock: bronze, tinned; round, 1/4 in; shakeproof-type, tw int teeth (Att. Pt.)	3	
-226	AN515-4-4	—	. SCREW, mach: slot drive; RH; steel, cad pl; No. 4-40; 1/4 in lg (Att. Pt.)	3	
-227	AN936A4B	—	. WASHER, lock: bronze, tinned, round, No. 4; shakeproof-type, tw int teeth (Att. Pt.)	3	
-228	M7482875P1	—	. PLATE, mounting	1	
-229	AN515-416-7	—	. SCREW, mach: slot drive; RH; steel, cad pl; 1/4 in-20; 7/16 in lg (Att. Pt.)	3	
-230	AN936B416B	—	. WASHER, lock: bronze, tinned; round, 1/4 in; shakeproof-type, tw ext teeth (Att. Pt.)	3	
-231	7403403	T10003	. TRANSFORMER, power	1	
-232	Coml	—	. SCREW, mach: slot drive; hex head; brass, cad pl; 5/16 in-18; 5/8 in lg (Att. Pt.) (Amer Screw)	6	
-233	Coml	—	. WASHER, flat: brass, cad pl; round, 11/32 in ID, 5/8 in OD, 0.063 in thk (Att. Pt.) (Wrought Washer)	6	
-234	AN936B516B	—	. WASHER, lock: bronze, tinned; round, 5/16 in; shakeproof-type, tw ext teeth (Att. Pt.)	6	
	P7700524P1	E10001	. VOLTAGE DIVIDER BOX	1	
-235	AN520-10-10	—	. SCREW, mach: slot drive; RH; steel, cad pl; No. 10-32; 5/8 in lg (Att. Pt.)	3	
-236	AN936B10B	—	. WASHER, lock: bronze, tinned; round, No. 10; shakeproof-type, tw ext teeth (Att. Pt.)	3	
-237	No Number	—	. . CAPACITOR ASSEMBLY, fixed (Included in E10001)	1	
-238	RG59/U	W10006	. . CABLE, RF: 65 in lg (Included in E10001)	1	
-239	UG262/U	J10006	. . CONNECTOR, receptacle (Included in E10001)	1	
	P7700525P1	E10002	. VOLTAGE DIVIDER BOX	1	
-240	AN520-10-10	—	. SCREW, mach: slot drive; RH; steel, cad pl; No. 10-32; 5/8 in lg (Att. Pt.)	3	
-241	AN936B10B	—	. WASHER, lock: bronze, tinned; round, No. 10; shakeproof-type, tw ext teeth (Att. Pt.)	3	
-242	No Number	—	. . CAPACITOR ASSEMBLY, fixed (Included in E10002)	1	
-243	RG59/U	W10007	. . CABLE, RF: 65 in lg (Included in E10002)	1	
-244	UG262/U	J10007	. . CONNECTOR, receptacle (Included in E10002)	1	
-245	CW-123/U	—	. CAP AND CHAIN SUBASSEMBLY	2	
-246	NP136030	—	. PLATE, identification	1	
-247	AN520B3-6	—	. SCREW, mach: slot drive; RH; brass, black oxidized; No. 3-56; 3/8 in lg (Att. Pt. for items 239, 244, 245 and 246)	2	
-248	AN520B3-5	—	. SCREW, mach: slot drive; RH; brass, black oxidized; No. 3-56; 5/16 in lg (Att. Pt. for items 239, 244 and 246)	6	
-249	1203	—	. WASHER, lock (Att. Pt. for items 239, 244, 245 and 246) (Shakeproof)	8	
-250	M7467948P1	E10003	. ARRESTOR, electrical surge	1	
-251	K7874555P17	—	. WASHER, flat	2	
-252	AN520-10-14	—	. SCREW, mach: slot drive; RH; steel, cad pl; No. 10-32; 7/8 in lg (Att. Pt. for items 250 and 251)	2	
-253	AN936B10B	—	. WASHER, lock: bronze, tinned; round, No. 10; shakeproof-type, tw ext teeth (Att. Pt. for items 250 and 251)	2	
-254	AN345-10	—	. NUT, hex: steel, cad pl; No. 10-32 (Att. Pt. for items 250 and 251)	2	
-255	K7000165P1	—	. PLATE, mounting	1	
-256	AN515-8-6	—	. SCREW, mach: slot drive; RH; steel, cad pl; No. 8-32; 3/8 in lg (Att. Pt.)	3	
-257	AN936B8B	—	. WASHER, lock: bronze, tinned; round, No. 8; shakeproof-type, tw ext teeth (Att. Pt.)	3	
-258	K7482865P1	—	. PLATE, mounting	1	
-259	AN515-8-5	—	. SCREW, mach: slot drive; RH; steel, cad pl; No. 8-32; 5/16 in lg (Att. Pt.)	6	
-260	AN936B8B	—	. WASHER, lock: bronze, tinned; round, No. 8; shakeproof-type, tw ext teeth (Att. Pt.)	6	
-261	2679	J10011	. CONNECTOR ASSEMBLY (GE)	1	
-262	AN515-8-5	—	. SCREW, mach: slot drive; RH; steel, cad pl; No. 8-32; 5/16 in lg (Att. Pt.)	2	
-263	AN936B8B	—	. WASHER, lock: bronze, tinned; round, No. 8; shakeproof-type, tw ext teeth (Att. Pt.)	2	
-264	AN340-8	—	. NUT, hex: steel, cad pl; No. 8-32 (Att. Pt.)	2	
-265	ST22N	S10011	. SWITCH, toggle	1	
-266	1222-1	—	. WASHER, lock (Shakeproof)	1	
-267	Coml	I10001	. LAMP, incandescent: Mazda 50A/RS, 120 v, 50 w	1	
-268	K7118447P1	XI10001	. LAMP HOLDER	1	
-269	AN520-10-14	—	. SCREW, mach: slot drive; RH; steel, cad pl; No. 10-32; 7/8 in lg (Att. Pt.)	2	

FIG. & INDEX NO.	PART NUMBER	REF SYMBOL	NOMENCLATURE 1 2 3 4 5 6 7	UNITS PER ASSY	APPLI-CATION
			RADAR MODULATOR MD-99/CPS-6B (Cont)		
66-270	AN936B10B	—	. WASHER, lock: bronze, tinned; round, No. 10; shakeproof-type, tw ext teeth (Att. Pt.)	2	
-271	AN345-10	—	. NUT, hex: steel, cad pl; No. 10-32 (Att. Pt.)	2	
-272	K7028262P1	—	. PLATE, mounting	1	
-273	AN515-8-5	—	. SCREW, mach: slot drive; RH; steel, cad pl; No. 8-32; 5/16 in lg (Att. Pt.)	4	
-274	AN936B8B	—	. WASHER, lock: bronze, tinned; round, No. 8; shakeproof-type, tw ext teeth (Att. Pt.)	4	
-275	K7000125P1	—	. PLATE, mounting	2	
-276	AN515-8-5	—	. SCREW, mach: slot drive; RH; steel, cad pl; No. 8-32; 5/16 in lg (Att. Pt.)	8	
-277	AN936B8B	—	. WASHER, lock: bronze, tinned; round, No. 8; shakeproof-type, tw ext teeth (Att. Pt.)	8	
-278	K7128740P1	—	. INSULATOR, standoff	2	
-279	AN515-416-10	—	. SCREW, mach: slot drive; RH; steel, cad pl; 1/4 in-20; 5/8 in lg (Att. Pt.)	2	
-280	AN936A416B	—	. WASHER, lock: bronze, tinned; round, 1/4 in; shakeproof-type, tw int teeth (Att. Pt.)	2	
-281	AN515-4-4	—	. SCREW, mach: slot drive; RH; steel, cad pl; No. 4-40; 1/4 in lg (Att. Pt.)	2	
-282	AN936A4B	—	. WASHER, lock: bronze, tinned; round, No. 4; shakeproof-type, tw int teeth (Att. Pt.)	2	
-283	K7128740P1	—	. INSULATOR, standoff	2	
-284	AN515-416-10	—	. SCREW, mach: slot drive; RH; steel, cad pl; 1/4 in-20, 5/8 in lg (Att. Pt.)	2	
-285	AN936A416B	—	. WASHER, lock: bronze, tinned; round, 1/4 in; shakeproof-type, tw int teeth (Att. Pt.)	2	
-286	AN515-4-5	—	. SCREW, mach: slot drive; RH; steel, cad pl; No. 4-40; 5/16 in lg (Att. Pt.)	2	
-287	AN936A4B	—	. WASHER, lock: bronze, tinned; round, No. 4; shakeproof-type, tw int teeth (Att. Pt.)	2	
-288	ML7400873G1	—	. BRACKET	1	
-289	AN520-10-7	—	. SCREW, mach: slot drive; RH; steel, cad pl; No. 10-32; 7/16 in lg (Att. Pt.)	4	
-290	AN936B10B	—	. WASHER, lock: bronze, tinned; round, No. 10; shakeproof-type, tw ext teeth (Att. Pt.)	4	
-291	AN345-10	—	. NUT, hex: steel, cad pl; No. 10-32 (Att. Pt.)	4	
-292	M7480544P21K	—	. POST, spacing	2	
-293	AN520-10-7	—	. SCREW, mach: slot drive; RH; steel, cad pl; No. 10-32; 7/16 in lg (Att. Pt.)	2	
-294	AN936B10B	—	. WASHER, lock: bronze, tinned; round, No. 10; shakeproof-type, tw ext teeth (Att. Pt.)	2	
-295	ML7772503G1	—	. SUPPORT, mounting base	1	
-296	ML7772542G2	—	. SUPPORT, mounting base	1	
-297	AN515-416-8	—	. SCREW, mach: slot drive; RH; steel, cad pl; 1/4 in-20; 1/2 in lg (Att. Pt. for items 295 and 296)	4	
-298	AN936B416B	—	. WASHER, lock: bronze, tinned; round, 1/4 in; shakeproof-type, tw ext teeth (Att. Pt. for items 295 and 296)	4	
-299	AN340-416	—	. NUT, hex: steel, cad pl; 1/4 in-20 (Att. Pt. for items 295 and 296)	4	
-300	MFA505	R10012	. RESISTOR, fixed	1	
-301	MFA505	R10013	. RESISTOR, fixed	1	
-302	MFA505	R10014	. RESISTOR, fixed	1	
-303	MFA505	R10015	. RESISTOR, fixed	1	
-304	RW10F252	R10010	. RESISTOR, fixed	1	
-305	RW10F252	R10011	. RESISTOR, fixed	1	
-306	K17-7A	—	. CLIP (Trumbull)	12	
-307	K7000164P1	—	. BAR, bus	3	
-308	M7405273P2	—	. PLATE, reinforcing	2	
-309	K7000150P1	—	. TERMINAL, lug	6	
-310	AN515-416-10	—	. SCREW, mach: slot drive; RH; steel, cad pl; 1/4 in-20; 5/8 in lg (Att. Pt. for items 306 thru 309)	12	
-311	AN936A416B	—	. WASHER, lock: bronze, tinned; round, 1/4 in; shakeproof-type, tw int teeth (Att. Pt. for items 306 thru 309)	12	
-312	AN515-4-8	—	. SCREW, mach: slot drive; RH; steel, cad pl; No. 4-40; 1/2 in lg (Att. Pt. for items 306 thru 309)	2	
-313	AN515-4-7	—	. SCREW, mach: slot drive; RH; steel, cad pl; No. 4-40; 7/16 in lg (Att. Pt. for items 306 and 309)	10	
-314	Coml	—	. WASHER, flat: brass, cad pl; round, 1/8 in ID, 1/4 in OD, 0.032 in thk (Att. Pt. for items 306 thru 309)	12	
-315	AN936A4B	—	. WASHER, lock: bronze, tinned; round, No. 4; shakeproof-type, tw int teeth (Att. Pt. for items 306 thru 309)	12	
✦					
-318	M7460330G5	S10006A	. SWITCH, interlock	1	
-319	M7460330G5	S10007A	. SWITCH, interlock	1	
-320	M7460330G5	S10009A	. SWITCH, interlock	1	
-321	M7460330G5	S10010A	. SWITCH, interlock	1	
-322	AN515-6-18	—	. SCREW, mach: slot drive; RH; steel, cad pl; No. 6-32; 1-1/8 in lg (Att. Pt. for items 318 thru 321)	8	
-323	AN936B6B	—	. WASHER, lock: bronze, tinned; round, No. 6; shakeproof-type, tw ext teeth (Att. Pt. for items 318 thru 321)	8	
-324	AN340-6	—	. NUT, hex: steel, cad pl; No. 6-32 (Att. Pt. for items 318 thru 321)	8	
-325	M7460330G2	S10006B	. SWITCH, interlock	1	
-326	M7460330G2	S10007B	. SWITCH, interlock	1	
-327	M7460330G2	S10009B	. SWITCH, interlock	1	
-328	M7460330G2	S10010B	. SWITCH, interlock	1	
-329	Coml	—	. SCREW, mach: slot drive; RH; brass, cad pl; No. 6-32; 9/16 in lg (Att. Pt. for items 325 thru 328) (Amer Screw)	8	
-330	AN936A6B	—	. WASHER, lock: bronze, tinned; round, No. 6; shakeproof-type, tw int teeth (Att. Pt. for items 325 thru 328)	8	
-331	M7480544P9F	—	. POST, spacing	8	
-332	AN505B6-5	—	. SCREW, mach: slot drive; FH; brass, black oxidized; No. 6-32; 5/16 in lg (Att. Pt.)	8	

FIG. & INDEX NO.	PART NUMBER	REF SYMBOL	NOMENCLATURE 1 2 3 4 5 6 7	UNITS PER ASSY	APPLI-CATION
			RADAR MODULATOR MD–99/CPS–6B (Cont)		
66–333	ST22N	S10008	. SWITCH, toggle	1	
–334	1222–1	—	. WASHER, lock (Att. Pt.) (Shakeproof)	1	
–335	RC20BF223J	R10007	. RESISTOR, fixed	1	
–336	RC20BF223J	R10008	. RESISTOR, fixed	1	
–337	7403407	T10004	. TRANSFORMER, power (GE)	1	
–338	7403408	L10001	. REACTOR (GE)	1	
–339	Coml	—	. SCREW, mach: slot drive; hex head; brass, black oxidized; 1/4 in–20; 5/8 in lg (Att. Pt. for items 337 and 338) (Amer Screw)	20	
–340	1914	—	. WASHER, lock (Att. Pt. for items 337 and 338)	20	
–341	Coml	—	. SCREW, mach: slot drive; hex head; brass, black oxidized; 1/4 in–20; 1/2 in lg (Att. Pt. for items 337 and 338) (Amer Screw)	10	
–342	AN936B416B	—	. WASHER, lock: bronze, tinned; round, 1/4 in; shakeproof-type, tw ext teeth (Att. Pt. for items 337 and 338)	10	
–343	AN340–416	—	. NUT, hex: steel, cad pl; 1/4 in–20 (Att. Pt. for items 337 and 338)	10	
–344	2788	T10001	. TRANSFORMER, pulse (GE)	1	
–345	Coml	—	. SCREW, mach: slot drive; hex head; brass, black oxidized; 5/16 in–18; 5/8 in lg (Att. Pt.) (Amer Screw)	2	
–346	1918	—	. WASHER, lock (Att. Pt.) (Shakeproof)	2	
–346A	Coml	—	. SCREW, mach: slot drive; hex head; brass, black oxidized; 5/16 in–18; 3/4 in lg (Att. Pt.) (Amer Screw)	6	
–347	AN936B516B	—	. WASHER, lock: bronze, tinned; round, 5/16 in; shakeproof-type, tw ext teeth (Att. Pt.)	6	
–348	AN340–516	—	. NUT, hex: steel, cad pl; 5/16 in–18 (Att. Pt.)	6	
–349	14F360	Z10003	. NET WORK, pulse forming (GE)	1	
–350	14F360	Z10001	. NET WORK, pulse forming (GE)	1	
–351	14F361	Z10004	. NET WORK, pulse forming (GE)	1	
–352	14F361	Z10002	. NET WORK, pulse forming (GE)	1	
–353	Coml	—	. SCREW, mach: slot drive; hex head; brass, black oxidized; 3/8 in–16; 3/4 in lg (Att. Pt. for items 349 thru 352) (Amer Screw)	8	
–354	AN936B616B	—	. WASHER, lock: bronze, tinned; round, 3/8 in; shakeproof-type, tw ext teeth (Att. Pt. for items 349 thru 352)	8	
–355	AN340–616	—	. NUT, hex: steel, cad pl; 3/8 in–16 (Att. Pt. for items 349 thru 352)	8	
–356	Coml	—	. SCREW, mach: slot drive; hex head; brass, black oxidized; 5/16 in–18; 5/8 in lg (Att. Pt. for items 349 thru 352)	48	
–357	1918	—	. WASHER, lock (Att. Pt. for items 349 thru 352)	48	
–358	UG290/U	J10013	. CONNECTOR, receptacle	1	
–359	UG290/U	J10012	. CONNECTOR, receptacle	1	
–360	CW–123/U	—	. CAP AND CHAIN SUBASSEMBLY	2	
–361	AN520B3–5	—	. SCREW, mach: slot drive; RH; brass, black oxidized; No. 3–56; 5/16 in lg (Att. Pt. for items 358 and 359)	6	
–362	AN520B3–6	—	. SCREW, mach: slot drive; RH; brass, black oxidized; No. 3–56; 3/8 in lg (Att. Pt. for items 358, 359 and 360)	2	
–363	1203	—	. WASHER, lock (Att. Pt. for items 358, 359 and 360) (Shakeproof)	8	
–364	NP140029M	—	. PLATE, identification	1	
–365	NP137462S	—	. PLATE, identification	1	
–366	NP140029S	—	. PLATE, identification	1	
–367	NP140029N	—	. PLATE, identification	1	
–368	Coml	—	. SCREW, self-tapping: Phillips drive; Bind H; SS; No. 4–40; 3/16 in lg (Att. Pt. for items 364 thru 367) (Shakeproof)	8	
	ML7000071G1	T10005	. TRANSFORMER SUBASSEMBLY, pulse	1	
–369	M2R53P2	—	. . GROMMET	1	
–370	No Number	—	. . TRANSFORMER, pulse	1	
	ML7000071G1	T10006	. TRANSFORMER SUBASSEMBLY, pulse	1	
–371	M2R53P2	—	. . GROMMET	1	
–372	No Number	—	. . TRANSFORMER, pulse	1	
–373	M7480544P7A	—	. POST, spacing	8	
–374	K7000070P2	—	. PLATE, jack	2	
–375	Coml	—	. SCREW, mach: slot drive; RH; steel, cad pl; No. 6–32; 9/16 in lg (Att. Pt. for ML7000071G1 and items 373 and 374) (Amer Screw)	8	
–376	AN936B6B	—	. WASHER, lock: bronze, tinned; round, No. 6; shakeproof-type, tw ext teeth (Att. Pt. for ML7000071G1 and items 373 and 374)	16	
–377	M7480544P7D	—	. POST, spacing	8	
–378	AN515B6–4	—	. SCREW, mach: slot drive; RH; brass, black oxidized; No. 6–32; 1/4 in lg (Att. Pt.)	8	
–379	1906	—	. WASHER, lock (Att. Pt.) (Shakeproof)	8	
–380	UG37A/U	J10002	. CONNECTOR, receptacle	1	
–381	UG37A/U	J10003	. CONNECTOR, receptacle	1	
–382	A927–1	—	. CAP AND CHAIN SUBASSEMBLY (Diamond Instr)	2	
–383	AN520B10–8	—	. SCREW, mach: slot drive; RH; brass, black oxidized; No. 10–32; 1/2 in lg (Att. Pt. for items 380, 381 and 382)	12	
–384	AN936B10B	—	. WASHER, lock: bronze, tinned; round, No. 10; shakeproof-type, tw ext teeth (Att. Pt. for items 380, 381 and 382)	12	
–384A	AN345–100	—	. NUT, hex: steel, cad pl; No. 10–32 (Att. Pt. for items 380, 381 and 382)	12	
–385	M7482886P1	—	. BRACKET	2	
–386	AN515–8–5	—	. SCREW, mach: slot drive; RH; steel, cad pl; No. 8–32; 5/16 in lg (Att. Pt.)	8	
–387	AN936B8B	—	. WASHER, lock: bronze, tinned; round, No. 8; shakeproof-type, tw ext teeth (Att. Pt.)	8	
–388	K7128740P1	—	. INSULATOR, standoff	4	
–389	AN515–416–10	—	. SCREW, mach: slot drive; RH; steel, cad pl; 1/4 in–20; 5/8 in lg (Att. Pt.)	4	
–390	AN936B416B	—	. WASHER, lock: bronze, tinned; round, 1/4 in; shakeproof-type, tw ext teeth (Att. Pt.)	4	
–391	K7128740P1	—	. INSULATOR, standoff	8	
–392	AN520B416–10	—	. SCREW, mach: slot drive; RH; brass, black oxidized; 1/4 in–20; 5/8 in lg (Att. Pt.)	8	
–393	1914	—	. WASHER, lock (Att. Pt.) (Shakeproof)	8	

FIG. & INDEX NO.	PART NUMBER	REF SYMBOL	NOMENCLATURE 1 2 3 4 5 6 7	UNITS PER ASSY	APPLI-CATION
			RADAR MODULATOR MD–99/CPS–6B (Cont)		
66–394	Coml	—	. SCREW, eye: steel, cad pl; 5/8 in–11; 1-3/4 in lg; machine screw; thread; straight angle round eye; 2-1/4 in ID (Amer Screw)	2	
–395	1828	—	. WASHER, lock (Shakeproof)	2	
–396	AN335–10	—	. NUT, hex: steel, cad pl; 5/8 in–11	2	
	ML7400821G1	—	. CLEANER, air	1	
–397	2600–6	—	. . FASTENER, spring lock (Camloc)	12	
–398	M7400818P1	—	. . CLOTH, wire	1	
–399	K7000189P1	—	. . GASKET	4	
–400	P1A	—	. CLEANER, air (Air Maze)	1	
–401	Coml	—	. STUD: brass, cad pl; 1-1/2 in lg overall; threaded full length 1/4 in–20 (Amer Screw)	1	
–402	AN936A416B	—	. WASHER, lock: bronze, tinned; round, 1/4 in; shakeproof-type, tw int teeth	4	
–403	AN340–416	—	. NUT, hex: steel, cad pl; 1/4 in–20	4	
–404	M2R53P3	—	. GROMMET	1	
–405	K7005735P2	—	. GUSSET	1	
–406	K7005735P1	—	. GUSSET	1	
–407	K7005736P1	—	. GUSSET	1	
–408	K7006297P2	—	. GUSSET	1	
–409	AN515B416–7	—	. SCREW, mach: slot drive; RH; brass, black oxidized; 1/4 in–20; 7/16 in lg (Att. Pt. for items 405 and 406)	4	
–410	AN515–416–8	—	. SCREW, mach: slot drive; RH; steel, cad pl; 1/4 in–20; 1/2 in lg (Att. Pt. for items 405 thru 408)	16	
–411	AN936B416	—	. WASHER, lock: steel, cad pl; round, 1/4 in; shakeproof-type, tw ext teeth (Att. Pt. for items 405 thru 408)	20	
–412	AN340–416	—	. NUT, hex: steel, cad pl; 1/4 in–20 (Att. Pt. for items 405 thru 408)	20	
–413	ST22N	S10012	. SWITCH, toggle	1	
–414	MSX–4–141	—	. BOARD, terminal (Jones HB)	1	
–415	AN515–6–10	—	. SCREW, mach: slot drive; RH; steel, cad pl; No. 6–32; 5/8 in lg (Att. Pt.)	4	
–416	AN936A6B	—	. WASHER, lock: bronze, tinned; round, No. 6; shakeproof-type, tw int teeth (Att. Pt.)	4	
–417	K7000073P1	—	. STUD	2	
–418	1914	—	. WASHER, lock (Shakeproof)	6	
–419	Coml	—	. NUT, hex: brass, black oxidized; 1/4 in–20	6	
–420	UG37A/U	J10001	. CONNECTOR, receptacle	1	
–421	A927–1	—	. CAP AND CHAIN SUBASSEMBLY (Diamond Instr)	1	
–422	AN520B10–8	—	. SCREW, mach: slot drive; RH; brass, black oxidized; No. 10–32; 1/2 in lg (Att. Pt. for items 420 and 421)	6	
–423	AN936B10B	—	. WASHER, lock: bronze, tinned; round, No. 10; shakeproof-type, tw ext teeth (Att. Pt. for items 420 and 421)	6	
–424	AN345–10	—	. NUT, hex: steel, cad pl; No. 10–32 (Att. Pt. for items 420 and 421)	6	
–425	UG414/U	J10004AB	. CONNECTOR, receptacle	1	
–426	AN520B3–4	—	. SCREW, mach: slot drive; RH; brass, black oxidized; No. 3–56; 1/4 in lg (Att. Pt.)	4	
–427	1203	—	. WASHER, lock (Att. Pt.) (Shakeproof)	4	
–428	NP140029R	—	. PLATE, identification	1	
–429	NP140029P	—	. PLATE, identification	1	
–430	NP140029T	—	. PLATE, identification	1	
–431	NP140029J	—	. PLATE, identification	1	
–432	Coml	—	. SCREW, self-tapping: Phillips drive; Bind H; SS; No. 4–40; 3/16 in lg (Att. Pt. for items 428 thru 431) (Shakeproof)	8	
–433	M7400802P1	—	. PLATE, cover	1	
–434	AN515B8–5	—	. SCREW, mach: slot drive; RH; brass, black oxidized; No. 8–32; 5/16 in lg (Att. Pt.)	18	
–435	1908	—	. WASHER, lock (Att. Pt.) (Shakeproof)	18	
–436	JX65A	Z10005	. SUPPRESSOR, electrical noise (Sprague)	1	
–437	JX65A	Z10006	. SUPPRESSOR, electrical noise (Sprague)	1	
–438	JX65A	Z10007	. SUPPRESSOR, electrical noise (Sprague)	1	
–439	JX65A	Z10008	. SUPPRESSOR, electrical noise (Sprague)	1	
–440	JX65A	Z10009	. SUPPRESSOR, electrical noise (Sprague)	1	
–441	JX65A	Z10010	. SUPPRESSOR, electrical noise (Sprague)	1	
–442	JX65A	Z10011	. SUPPRESSOR, electrical noise (Sprague)	1	
–443	JX65A	Z10012	. SUPPRESSOR, electrical noise (Sprague)	1	
–444	C1145	J10010	. CONNECTOR, receptacle (Buggie)	1	
			CABINET		
67–	ML7300316G1	—	. CABINET (See Figure 66–1 for next higher assembly)	Ref	
–1	No Number	—	. . BASE (W7300316P20, P21, P24, P25, P26, and P27, assembled)	1	
–2	No Number	—	. . FRAME (W7300316P5, P7, P9, P11, P15 thru P18, P30, P34 thru P39, P41, P43, P45, P47, P54, P55, P57 thru P61, P63, P64, P67, P75, P78 thru P82 and P100, assembled)	1	
–3	Coml	—	. . BOLT, mach: hex head; steel, cad pl; 3/8 in–16; 5/8 in lg (Att. Pt.) (Amer Screw)	13	
–4	AN936B616	—	. . WASHER, lock: steel, cad pl; round, 3/8 in; shakeproof-type, tw ext teeth (Att. Pt.)	13	
–5	AN340–616	—	. . NUT, hex: steel, cad pl; 3/8 in–16 (Att. Pt.)	13	
–6	58–212BE	—	. . HINGE (Natl Lock)	1	
–7	AN505–6–6	—	. . SCREW, mach: slot drive; FH; steel, cad pl; No. 6–32; 3/8 in lg (Att. Pt.)	13	
–8	AN936B6	—	. . WASHER, lock: steel, cad pl; round, No. 6; shakeproof-type, tw ext teeth (Att. Pt.)	13	

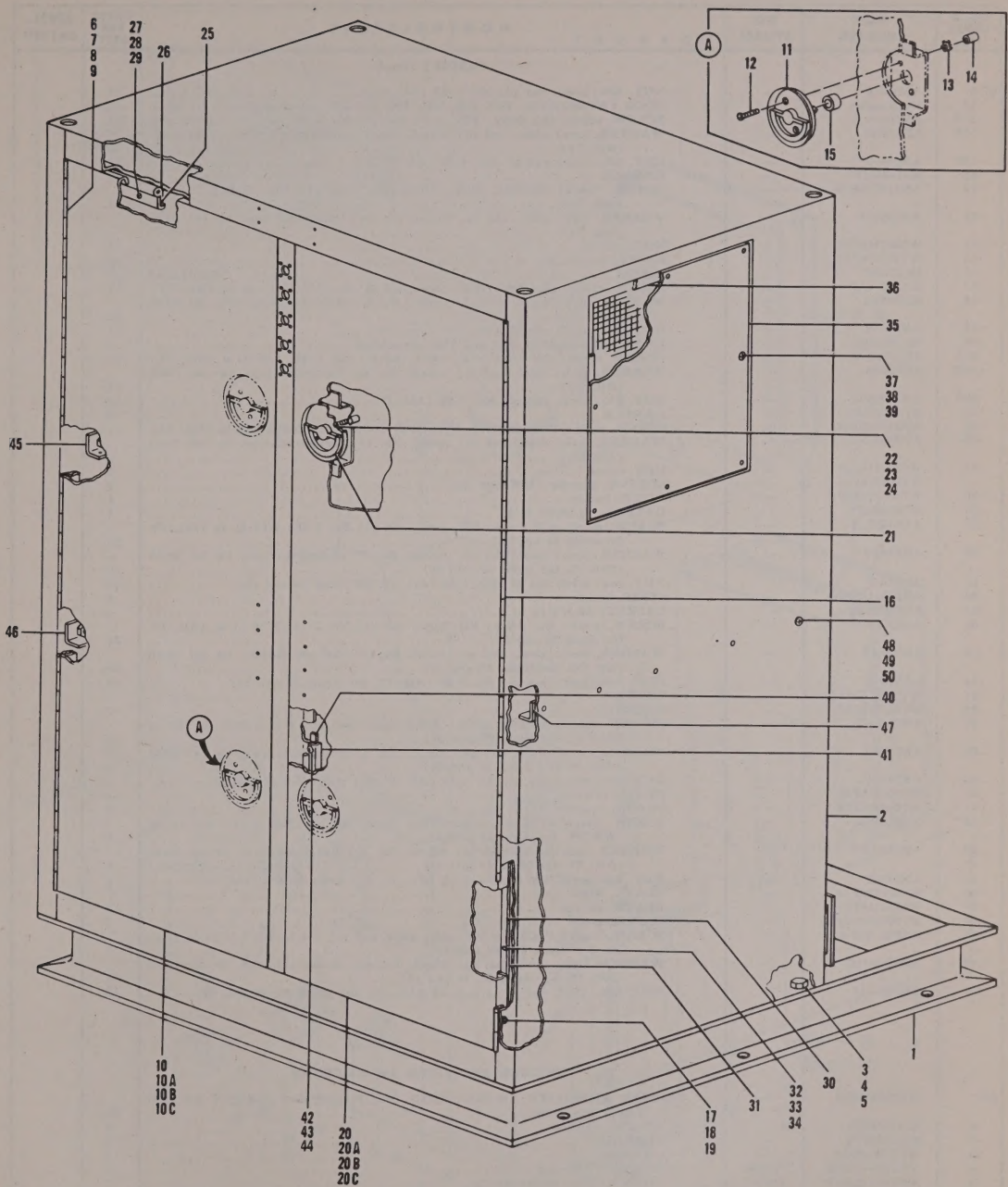

Figure 67. Cabinet

FIG. & INDEX NO.	PART NUMBER	REF SYMBOL	NOMENCLATURE 1 2 3 4 5 6 7	UNITS PER ASSY	APPLI-CATION
			CABINET (Cont)		
67–9	AN340–6	—	. . NUT, hex: steel, cad pl; No. 6–32 (Att. Pt.)	13	
–10	No Number	—	. . DOOR (W7300316P14, P19, P29, P31, P33 and P52, assembled)	1	
–10A	AN505–6–6	—	. . SCREW, mach: slot drive; FH; steel, cad pl; No. 6–32; 3/8 in lg (Att. Pt.)	13	
–10B	AN936B6	—	. . WASHER, lock: steel, cad pl; round, No. 6; shakeproof-type, tw ext teeth (Att. Pt.)	13	
–10C	AN340–6	—	. . NUT, hex: steel, cad pl; No. 6–32 (Att. Pt.)	13	
–11	M7483488P1	—	. . HANDLE	2	
–12	AN510–10R16	—	. . SCREW, mach: Phillips drive; FH; steel, cad pl; No. 10–32; 1 in lg (Att. Pt.)	4	
–13	AN936B10	—	. . WASHER, lock: steel, cad pl; round, No. 10; shakeproof-type, tw ext teeth (Att. Pt.)	4	
–14	W7300316P68	—	. . NUT, round	4	
–15	W7300316P65	—	. . SLEEVE, spacing	2	
–16	58–212BE	—	. . HINGE (Natl Lock)	1	
–17	AN505–6–6	—	. . SCREW, mach: slot drive; FH; steel, cad pl; No. 6–32; 3/8 in lg (Att. Pt.)	13	
–18	AN936B6	—	. . WASHER, lock: steel, cad pl; round, No. 6; shakeproof-type, tw ext teeth (Att. Pt.)	13	
–19	AN340–6	—	. . NUT, hex: steel, cad pl; No. 6–32 (Att. Pt.)	13	
–20	No Number	—	. . DOOR (W7300316P13, P31 and P32, assembled)	1	
–20A	AN505–6–6	—	. . SCREW, mach: slot drive; FH; steel, cad pl; No. 6–32; 3/8 in lg (Att. Pt.)	13	
–20B	AN936B6	—	. . WASHER, lock: steel, cad pl; round, No. 6; shakeproof-type, tw ext teeth (Att. Pt.)	13	
–20C	AN340–6	—	. . NUT, hex: steel, cad pl; No. 6–32 (Att. Pt.)	13	
–21	M7483488P1	—	. . HANDLE	2	
–22	AN510–10R16	—	. . SCREW, mach: Phillips drive; FH; steel, cad pl; No. 10–32; 1 in lg (Att. Pt.)	4	
–23	AN936B10	—	. . WASHER, lock: steel, cad pl; round, No. 10; shakeproof-type, tw ext teeth (Att. Pt.)	4	
–24	W7300316P68	—	. . NUT, round	4	
	W7300316P65	—	. . SLEEVE, spacing (Ref item 15)	2	
–25	W7300316P70	—	. . STRIP, batten	4	
–26	K7002962P2	—	. . GASKET: 14-29/32 in lg	4	
–27	AN515–2–5	—	. . SCREW, mach: slot drive; RH; steel, cad pl; No. 2–56; 5/16 in lg (Att. Pt. for items 25 and 26)	20	
–28	AN936A2	—	. . WASHER, lock: steel, cad pl; round, No. 2; shakeproof-type, tw int teeth (Att. Pt. for items 25 and 26)	20	
–29	AN340–2	—	. . NUT, hex: steel, cad pl; No. 2–56 (Att. Pt. for items 25 and 26)	20	
–30	W7300316P69	—	. . STRIP, batten	4	
–31	K7002962P2	—	. . GASKET: 36-3/4 in lg	4	
–32	AN515–2–5	—	. . SCREW, mach: slot drive; RH; steel, cad pl; No. 2–56; 5/16 in lg (Att. Pt. for items 30 and 31)	40	
–33	AN936A2	—	. . WASHER, lock: steel, cad pl; round No. 2; shakeproof-type, tw int teeth (Att. Pt. for items 30 and 31)	40	
–34	AN340–2	—	. . NUT, hex: steel, cad pl; No. 2–56 (Att. Pt. for items 30 and 31)	40	
–35	W7300316P53	—	. . COVER	1	
–36	W7300316P66	—	. . GASKET	1	
–37	AN515–4–6	—	. . SCREW, mach: Phillips drive; RH; steel, cad pl; No. 4–40; 3/8 in lg (Att. Pt. for items 35 and 36)	8	
–38	AN936B4	—	. . WASHER, lock: steel, cad pl; round, No. 4; shakeproof-type, tw ext teeth (Att. Pt. for items 35 and 36)	8	
–39	AN340–4	—	. . NUT, hex: steel, cad pl; No. 4–40 (Att. Pt. for items 35 and 36)	8	
–40	W7300316P42	—	. . PLATE, friction	4	
–41	W7300316P69	—	. . PLATE, retainer	4	
–42	AN515–2–6	—	. . SCREW, mach: Phillips drive; RH; steel, cad pl; No. 2–56; 3/8 in lg (Att. Pt. for items 40 and 41)	8	
–43	AN936A2	—	. . WASHER, lock: steel, cad pl; round, No. 2; shakeproof-type, tw int teeth (Att. Pt. for items 40 and 41)	8	
–44	AN340–2	—	. . NUT, hex: steel, cad pl; No. 2–56 (Att. Pt. for items 40 and 41)	8	
–45	W7300316P49	—	. . PLATE, angle	1	
–46	W7300316P50	—	. . PLATE, angle	1	
–47	W7300316P51	—	. . PLATE, angle	1	
–48	AN520–416–8	—	. . SCREW, mach: Phillips drive; RH; steel, cad pl; 1/4 in–20; 1/2 in lg (Att. Pt. for items 45, 46 and 47)	13	
–49	AN936B416	—	. . WASHER, lock: steel, cad pl; round, 1/4 in; shakeproof-type, tw ext teeth (Att. Pt. for items 45, 46 and 47)	13	
–50	AN340–416	—	. . NUT, hex: steel, cad pl; 1/4 in–20 (Att. Pt. for items 45, 46 and 47)	13	
			TRIGGER AMPLIFIER AM–268/CPS–6B		
68–	ML7664861G1	—	. TRIGGER AMPLIFIER AM–268/CPS–6B (See Figures 66–2 and 71–2 for next higher assembly)	Ref	
–1	K7126123P4	—	. . SCREW, captive	2	
–2	K7128235P2	—	. . BUSHING	2	
–3	ML7666422G1	—	. . CHASSIS	1	
–4	AN3106–14S5S	P10604	. . CONNECTOR, plug	1	
–5	AN3102–14S5P	J10604	. . CONNECTOR, receptacle	1	
–6	AN515–4–5	—	. . SCREW, mach: slot drive; RH; steel, cad pl; No. 4–40; 5/16 in lg (Att. Pt.)	4	
–7	AN936B4B	—	. . WASHER, lock: bronze, tinned; round, No. 4; shakeproof-type, tw ext teeth (Att. Pt.)	4	
–8	AN340–4	—	. . NUT, hex: steel, cad pl; No. 4–40 (Att. Pt.)	4	
–9	926C	—	. . CLAMP (Birtcher)	1	
–10	AN520–10–6	—	. . SCREW, mach: slot drive; RH; steel, cad pl; No. 10–32; 3/8 in lg (Att. Pt.)	1	

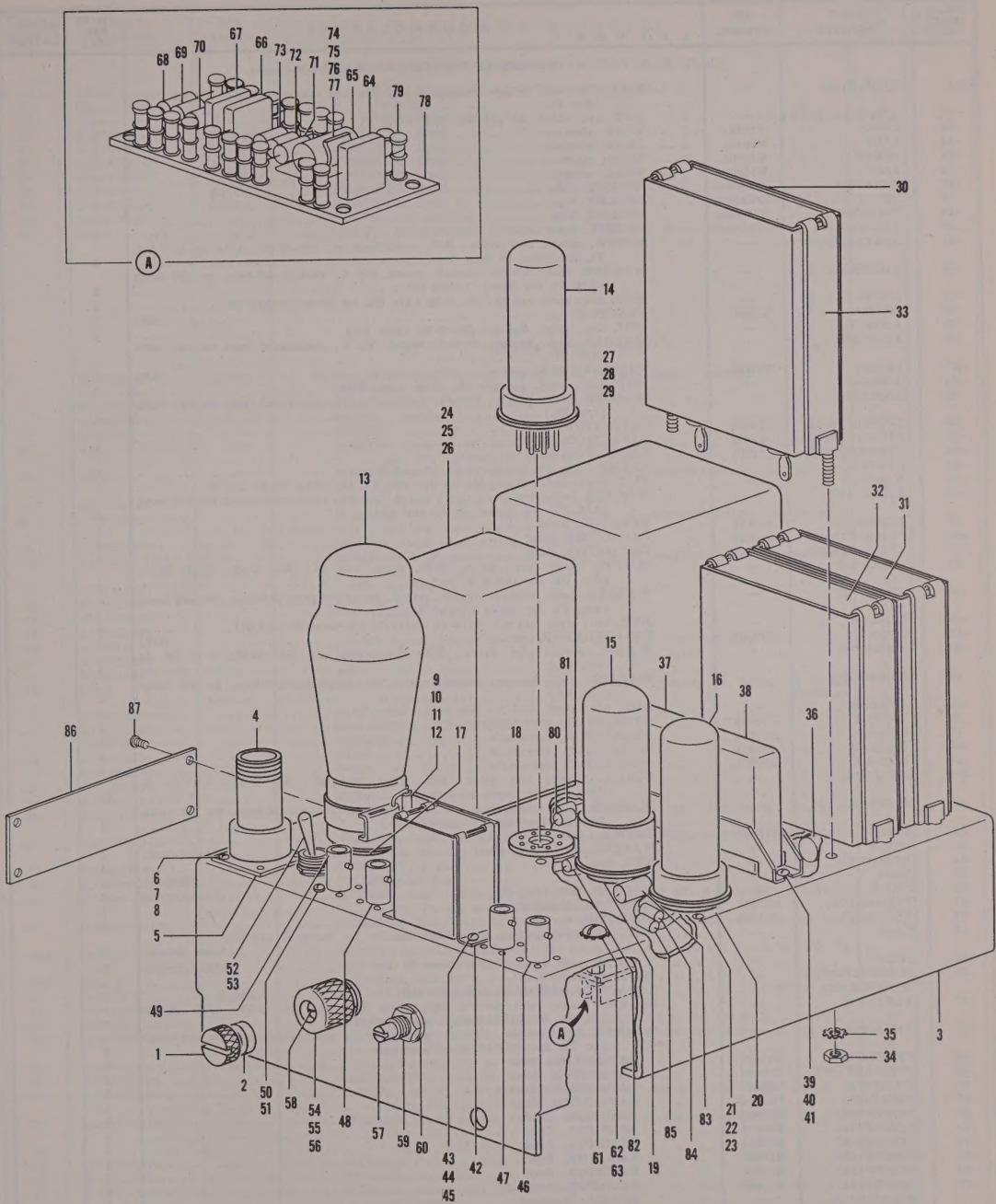

Figure 68. Trigger Amplifier AM–268/CPS–6B

FIG. & INDEX NO.	PART NUMBER	REF SYMBOL	NOMENCLATURE 1 2 3 4 5 6 7	UNITS PER ASSY	APPLI-CATION
			TRIGGER AMPLIFIER AM–268/CPS–6B (Cont)		
68–11	AN936B10B	—	. . WASHER, lock: bronze, tinned; round, No. 10; shakeproof-type, tw ext teeth (Att. Pt.)	1	
–12	AN345–10	—	. . NUT, hex: steel, cad pl; No. 10–32 (Att. Pt.)	1	
–13	5R4GY	V10604	. . TUBE, electron	1	
–14	6AG7	V10601	. . TUBE, electron	1	
–15	6SN7W	V10602	. . TUBE, electron	1	
–16	6AG7	V10603	. . TUBE, electron	1	
–17	TSB8T101	XV10604	. . SOCKET, tube	1	
–18	TSB8T101	XV10601	. . SOCKET, tube	1	
–19	TSB8T101	XV10602	. . SOCKET, tube	1	
–20	TSB8T101	XV10603	. . SOCKET, tube	1	
–21	AN515–6–5	—	. . SCREW, mach: slot drive; RH; steel, cad pl; No. 6–32; 5/16 in lg (Att. Pt. for items 17 thru 20)	8	
–22	AN9396B6B	—	. . WASHER, lock: bronze, tinned; round, No. 6; shakeproof-type, tw ext teeth (Att. Pt. for items 17 thru 20)	8	
–23	AN340–6	—	. . NUT, hex: steel, cad pl; No. 6–32 (Att. Pt. for items 17 thru 20)	8	
–24	7481554	L10601	. . REACTOR (GE)	1	
–25	AN340–6	—	. . NUT, hex: steel, cad pl; No. 6–32 (Att. Pt.)	4	
–26	AN936B6B	—	. . WASHER, lock: bronze, tinned; round, No. 6; shakeproof-type, tw ext teeth (Att. Pt.)	4	
–27	7481553	T10601	. . TRANSFORMER, power (GE)	1	
–28	AN340–8	—	. . NUT, hex: steel, cad pl; No. 8–32 (Att. Pt.)–	4	
–29	AN936B8B	—	. . WASHER, lock: bronze, tinned; round, No. 8; shakeproof-type, tw ext teeth (Att. Pt.)	4	
–30	CP70B1FF805K	C10602	. . CAPACITOR, fixed	1	
–31	CP70B1FF805K	C10603	. . CAPACITOR, fixed	1	
–32	CP70B1FF805K	C10601	. . CAPACITOR, fixed	1	
–33	CPO7SC2	—	. . CLAMP (Att. Pt. for items 30, 31 and 32)	6	
–34	AN345–10	—	. . NUT, hex: steel, cad pl; No. 10–32 (Att. Pt. for items 30, 31 and 32)	6	
–35	AN936B10B	—	. . WASHER, lock: bronze, tinned; round, No. 10; shakeproof-type, tw ext teeth (Att. Pt. for items 30, 31 and 32)	6	
–36	RC40BF332J	R10615	. . RESISTOR, fixed	1	
–37	CP65B1FF504K	C10609	. . CAPACITOR, fixed	1	
–38	CP65B1FF504K	C10607	. . CAPACITOR, fixed	1	
–39	AN515–6–5	—	. . SCREW, mach: slot drive; RH; steel, cad pl; No. 6–32; 5/16 in lg (Att. Pt. for items 37 and 38)	4	
–40	AN936B6B	—	. . WASHER, lock: bronze, tinned; round, No. 6; shakeproof-type, tw ext teeth (Att. Pt. for items 37 and 38)	4	
–41	AN340–6	—	. . NUT, hex: steel, cad pl; No. 6–32 (Att. Pt. for items 37 and 38)	4	
–42	7475601	T10602	. . TRANSFORMER, pulse (GE)	1	
–43	AN515–6–5	—	. . SCREW, mach: slot drive; RH; steel, cad pl; No. 6–32; 5/16 in lg (Att. Pt.)	4	
–44	AN936B6B	—	. . WASHER, lock: bronze, tinned; round, No. 6; shakeproof-type, tw ext teeth (Att. Pt.)	4	
–45	AN340–6	—	. . NUT, hex: steel, cad pl; No. 6–32 (Att. Pt.)	4	
–46	UG290/U	J10605	. . CONNECTOR, receptacle	1	
–47	UG290/U	J10603	. . CONNECTOR, receptacle	1	
–48	UG290/U	J10602	. . CONNECTOR, receptacle	1	
–49	UG290/U	J10601	. . CONNECTOR, receptacle	1	
–50	AN520–3–4	—	. . SCREW, mach: slot drive; RH; steel, cad pl; No. 3–56; 1/4 in lg (Att. Pt. for items 46 thru 49)	16	
–51	AN936A3	—	. . WASHER, lock: steel, cad pl; round, No. 3; shakeproof-type, tw int teeth (Att. Pt. for items 46 thru 49)	16	
–52	ST22N	S10601	. . SWITCH, toggle	1	
–53	1222–1	—	. . WASHER, lock (Att. Pt.) (Shakeproof)	1	
–54	M7481469P1	—	. . NUT, lock	2	
–55	10061	—	. . COLLET (Millen)	2	
–56	1920–2	—	. . WASHER, lock (Att. Pt.) (Shakeproof)	2	
–57	P7770835P22	R10601	. . RESISTOR, variable	1	
–58	P7768146P5	R10605	. . RESISTOR, variable	1	
–59	Coml	—	. . NUT, hex: steel, cad pl; 3/8 in–32 (Att. Pt. for items 57 and 58) (Amer Screw)	2	
–60	1920–2	—	. . WASHER, lock (Att. Pt. for items 57 and 58) (Shakeproof)	2	
–61	M7480544P11F	—	. . POST, spacing	4	
	ML7482821G1	—	. . CAPACITOR-RESISTOR SUBASSEMBLY	1	
–62	AN515–8–5	—	. . SCREW, mach: slot drive; RH; steel, cad pl; No. 8–32; 5/16 in lg (Att. Pt. for ML7482821G1 and item 61)	8	
–63	AN936B8B	—	. . WASHER, lock: bronze, tinned; round, No. 8; shakeproof-type, tw ext teeth (Att. Pt. for ML7482821G1 and item 61)	8	
–64	CM35D472J	C10608	. . . CAPACITOR, fixed	1	
–65	CP26A1EF103V	C10606	. . . CAPACITOR, fixed	1	
–66	CM35D472J	C10605	. . . CAPACITOR, fixed	1	
–67	CM35D472J	C10604	. . . CAPACITOR, fixed	1	
–68	RC20BF680J	R10614	. . . RESISTOR, fixed	1	
–69	RC20BF474J	R10613	. . . RESISTOR, fixed	1	
–70	RC20BF102J	R10612	. . . RESISTOR, fixed	1	
–71	RC20BF102J	R10609	. . . RESISTOR, fixed	1	
–72	RC20BF334J	R10608	. . . RESISTOR, fixed	1	
–73	RC20BF334J	R10606	. . . RESISTOR, fixed	1	
	ML7482819G1	—	. . . BOARD, terminal	1	
–74	K7118719P2	—	. . . . CLIP	1	
–75	AN515–4–5	—	. . . . SCREW, mach: slot drive; RH; steel, cad pl; No. 4–40; 5/16 in lg (Att. Pt.)	1	
–76	AN936B4B	—	. . . . WASHER, lock: bronze, tinned; round, No. 4; shakeproof-type, tw ext teeth (Att. Pt.)	1	

FIG. & INDEX NO.	PART NUMBER	REF SYMBOL	NOMENCLATURE 1 2 3 4 5 6 7	UNITS PER ASSY	APPLI-CATION
			TRIGGER AMPLIFIER AM–268/CPS–6B (Cont)		
68–77	AN340–4	—	. . . . NUT, hex: steel, cad pl; No. 4–40 (Att. Pt.)	1	
–78	M7482819P2	—	. . . . PANEL	1	
–79	T100–3	—	. . . . TERMINAL, stud (Bead Chain)	20	
–80	RC20BF104J	R10602	. . RESISTOR, fixed	1	
–81	RC20BF332J	R10603	. . RESISTOR, fixed	1	
–82	RC20BF224J	R10604	. . RESISTOR, fixed	1	
–83	RC30BF682J	R10607	. . RESISTOR, fixed	1	
–84	RC20BF104J	R10610	. . RESISTOR, fixed	1	
–85	RC20BF332J	R10611	. . RESISTOR, fixed	1	
–86	NP136331B	—	. . PLATE, identification	1	
–87	Coml	—	. . SCREW, self-tapping: Phillips drive; RH; SS; No. 4–40; 3/16 in lg (Att. Pt.) (Shakeproof)	4	
			RADAR MODULATOR		
69–	ML7354001G1	S10001	. RADAR MODULATOR (See Figure 66–28 for next higher assembly)	Ref	
–1	ML7771494G1	—	. . CHASSIS	1	
–2	M7482851P1	—	. . DISK, Geneva	1	
–3	K7002234P1	—	. . PLATE, retainer	1	
–4	K7004039	—	. . SPRING	1	
–5	AN515–6–4	—	. . SCREW, mach: slot drive; RH; steel, cad pl; No. 6–32; 1/4 in lg (Att. Pt. for item 3)	1	
–6	AN936A6	—	. . WASHER, lock: steel, cad pl; round, No. 6; shakeproof-type, tw int teeth (Att. Pt. for item 3)	1	
–7	K7002252P2	—	. . SCREW, mach (Att. Pt. for items 3 and 4)	1	
–8	AN936A6	—	. . WASHER, lock: steel, cad pl; round, No. 6; shakeproof-type, tw int teeth (Att. Pt. for items 3 and 4)	1	
–9	K7002255P1	—	. . SCREW, mach (Att. Pt. for item 4)	1	
–10	AN936A6	—	. . WASHER, lock: steel, cad pl; round, No. 6; shakeproof-type, tw int teeth (Att. Pt. for item 4)	1	
–11	K7002254P1	—	. . POST, spacing	1	
–12	K7002239P1	—	. . BLOCK, guide	1	
–13	M7461888P6	—	. . PIN, taper (Att. Pt.)	1	
–14	K7002238P1	—	. . CAM	1	
–15	AN505–6–4	—	. . SCREW, mach: slot drive; FH; steel, cad pl; No. 6–32; 1/4 in lg (Att. Pt.)	2	
–16	K7001555P1	—	. . SHAFT	1	
–17	M7403903P1	—	. . ARM	1	
–18	Coml	—	. . SCREW, set: Bristo six-spline drive; headless; copper; No. 6–32; 1/4 in lg; cup point (Att. Pt.) (Bristolco)	1	
–19	M7461888P6	—	. . PIN, taper (Att. Pt.)	1	
–20	K7000157G1	—	. . MOUNTING SUBASSEMBLY, arm	1	
–21	K7000158P1	—	. . TERMINAL, lug	1	
–22	K7128791P1	—	. . SHIM	1	
–23	K7128791P2	—	. . SHIM	1	
–24	K7128791P3	—	. . SHIM	1	
–25	K7128791P4	—	. . SHIM	1	
–26	AN515–416–16	—	. . SCREW, mach: slot drive; RH; steel, cad pd; 1/4 in–20; 1 in lg (Att. Pt. for items 20 thru 25)	2	
–27	AN936B416B	—	. . WASHER, lock: bronze, tinned; round, 1/4 in; shakeproof-type, tw ext teeth (Att. Pt. for items 20 thru 25)	2	
–28	K7002237P1	—	. . CONTACT, switch	2	
–29	K7002235P1	—	. . TERMINAL, lug	2	
–30	AN500–416–12	—	. . SCREW, mach: slot drive; Fil H; steel, cad pl; 1/4 in–20; 3/4 in lg (Att. Pt. for items 28 and 29)	2	
–31	AN936A416B	—	. . WASHER, lock: bronze, tinned; round, 1/4 in; shakeproof-type, tw int teeth (Att. Pt. for items 28 and 29)	2	
–31A	AN500–4–4	—	. . SCREW, mach: slot drive; Fil H; brass, cad pl; No. 4–40; 1/4 in lg (Att. Pt. for items 28 and 29)	2	
–31B	625527	—	. . WASHER, lock (Att. Pt. for items 28 and 29) (Wemco)	2	
–32	NC1–12R	B10001	. . MOTOR, AC (See Figure 70 for breakdown) (Bodine Elec)	1	
–33	M7461888P16	—	. . PIN, taper (Att. Pt.)	1	
–34	AN515–416–8	—	. . SCREW, mach: slot drive; RH; steel, cad pl; 1/4 in–20; 1/2 in lg (Att. Pt.)	4	
–35	AN936B416B	—	. . WASHER, lock: bronze, tinned; round, 1/4 in; shakeproof-type, tw ext teeth (Att. Pt.)	4	
–36	AN340–416	—	. . NUT, hex: steel, cad pl; 1/4 in–20 (Att. Pt.)	4	
–37	K7128740P1	—	. . INSULATOR, standoff	4	
–38	AN500–416–12	—	. . SCREW, mach: slot drive; Fil H; brass, cad pl; 1/4 in–20; 3/4 in lg (Att. Pt.)	4	
–39	AN936A416B	—	. . WASHER, lock: bronze, tinned; round, 1/4 in; shakeproof-type, tw int teeth (Att. Pt.)	4	
✦					
–42	K7871267P1	—	. . WRENCH	1	
–43	K7126174P1	—	. . HOLDER, wrench	1	
–44	AN515–4–5	—	. . SCREW, mach: slot drive; RH; steel, cad pl; No. 4–40; 5/16 in lg (Att. Pt.)	2	
–45	AN936B4B	—	. . WASHER, lock: bronze, tinned; round, No. 4; shakeproof-type, tw ext teeth (Att. Pt.)	2	
–46	AN340–4	—	. . NUT, hex: steel, cad pl; No. 4–40 (Att. Pt.)	2	
–47	MSX8–141	—	. . BOARD, terminal (Jones HB)	1	

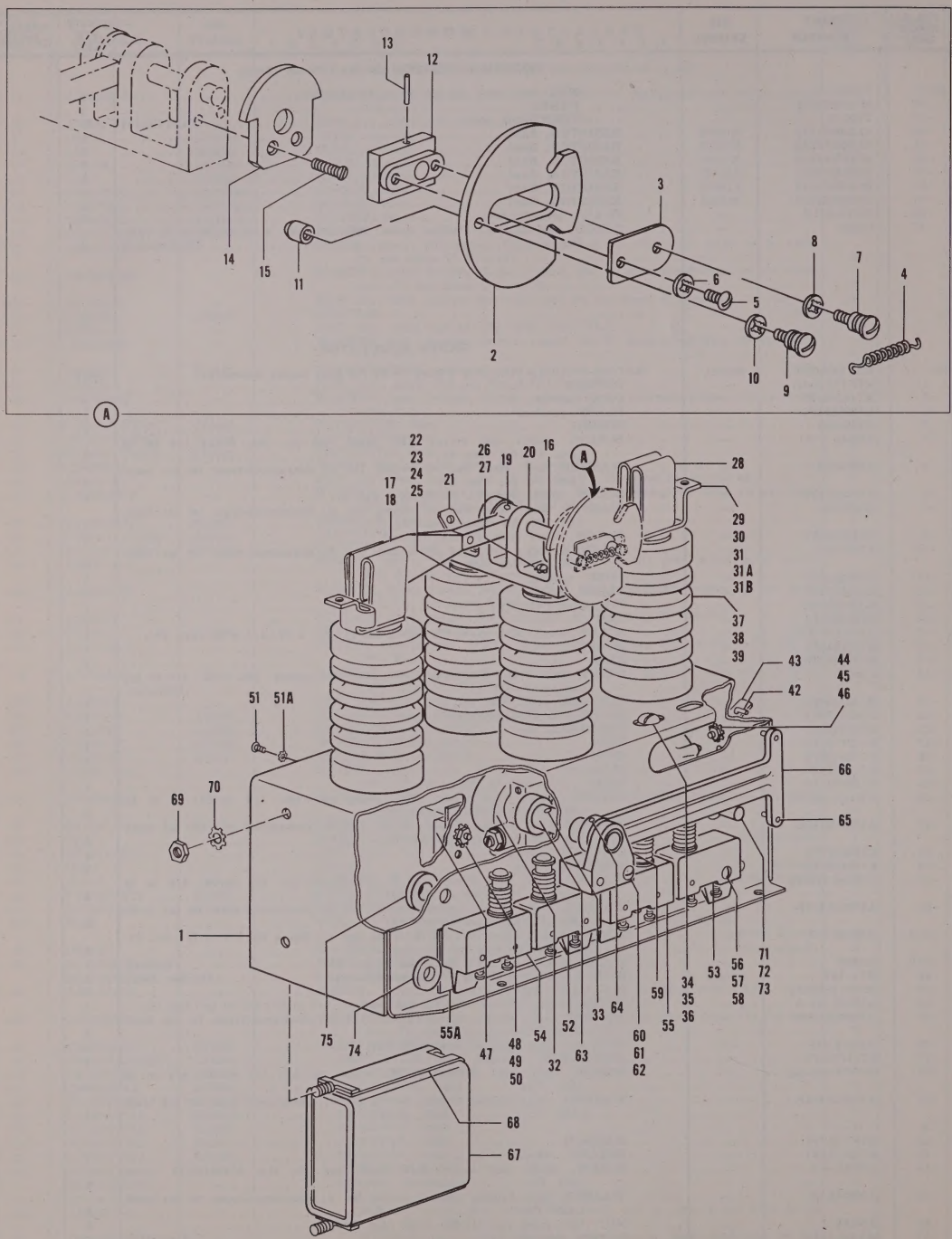

Figure 69. Radar Modulator

FIG. & INDEX NO.	PART NUMBER	REF SYMBOL	NOMENCLATURE 1 2 3 4 5 6 7	UNITS PER ASSY	APPLI-CATION
			RADAR MODULATOR (Cont)		
69–48	AN515–8–10	—	. . SCREW, mach: slot drive; RH; steel, cad pl; No. 8–32; 5/8 in lg (Att. Pt.)	4	
–49	AN936B8B	—	. . WASHER, lock: bronze, tinned; round, No. 8; shakeproof-type, tw ext teeth (Att. Pt.)	4	
–50	AN340–8	—	. . NUT, hex: steel, cad pl; No. 8–32 (Att. Pt.)	4	
–51	AN508–6–4	—	. . SCREW, mach: slot drive; RH; brass, tin pl; No. 6–32; 1/4 in lg	16	
–51A	AN936B6B	—	. . WASHER, lock: bronze, tinned; round, No. 6; shakeproof-type, tw ext teeth	16	
–52	SS03B20	S10005	. . SWITCH, sensitive	1	
–53	SS03B20	S10004	. . SWITCH, sensitive	1	
–54	SS03B20	S10003	. . SWITCH, sensitive	1	
–55	SS03B20	S10002	. . SWITCH, sensitive	1	
–55A	K7004627P1	—	. . INSULATOR, plate	1	
–56	AN515–4–16	—	. . SCREW, mach: slot drive; RH; steel, cad pl; No. 4–40; 1 in lg (Att. Pt. for items 52 thru 55A)	8	
–57	AN936B4B	—	. . WASHER, lock: bronze, tinned; round, No. 4; shakeproof-type, tw ext teeth (Att. Pt. for items 52 thru 55A)	8	
–58	AN340–4	—	. . NUT, hex: steel, cad pl; No. 4–40 (Att. Pt. for items 52 thru 55A)	8	
–59	K7000179G1	—	. . SUPPORT, shaft	1	
–60	Coml	—	. . SCREW, mach: slot drive; RH; brass, cad pl; No. 8–32; 1-3/8 in lg (Att. Pt.) (Amer Screw)	2	
–61	AN936B8B	—	. . WASHER, lock: bronze, tinned; round, No. 8; shakeproof-type, tw ext teeth (Att. Pt.)	2	
–62	AN340–8	—	. . NUT, hex: steel, cad pl; No. 8–32 (Att. Pt.)	2	
	ML7400830G1	—	. . ARM SUBASSEMBLY	1	
–63	K7000105P1	—	. . . SHAFT	1	
–64	M7461888P19	—	. . . PIN, taper (Att. Pt.)	1	
–65	K7000116P1	—	. . . PIN, dowel	2	
–66	M7482850P1	—	. . . ARM	1	
–67	CP70B1FF405K	C10001	. . CAPACITOR, fixed	1	
–68	CPO7SB3	—	. . CLAMP (Att. Pt.)	2	
–69	AN345–10	—	. . NUT, hex: steel, cad pl; No. 10–32 (Att. Pt.)	2	
–70	AN936B10B	—	. . WASHER, lock: bronze, tinned; round, No. 10; shakeproof-type, tw ext teeth (Att. Pt.)	2	
–71	K7000115P1	—	. . STOP, range limit	2	
–72	AN345–10	—	. . NUT, hex: steel, cad pl; No. 10–32 (Att. Pt.)	2	
–73	AN936B10B	—	. . WASHER, lock: bronze, tinned; round, No. 10; shakeproof-type, tw ext teeth (Att. Pt.)	2	
–74	M2R53P13	—	. . GROMMET	2	
–75	M2R53P14	—	. . GROMMET	1	

This information will be supplied at a later date.

Figure 70. AC Motor

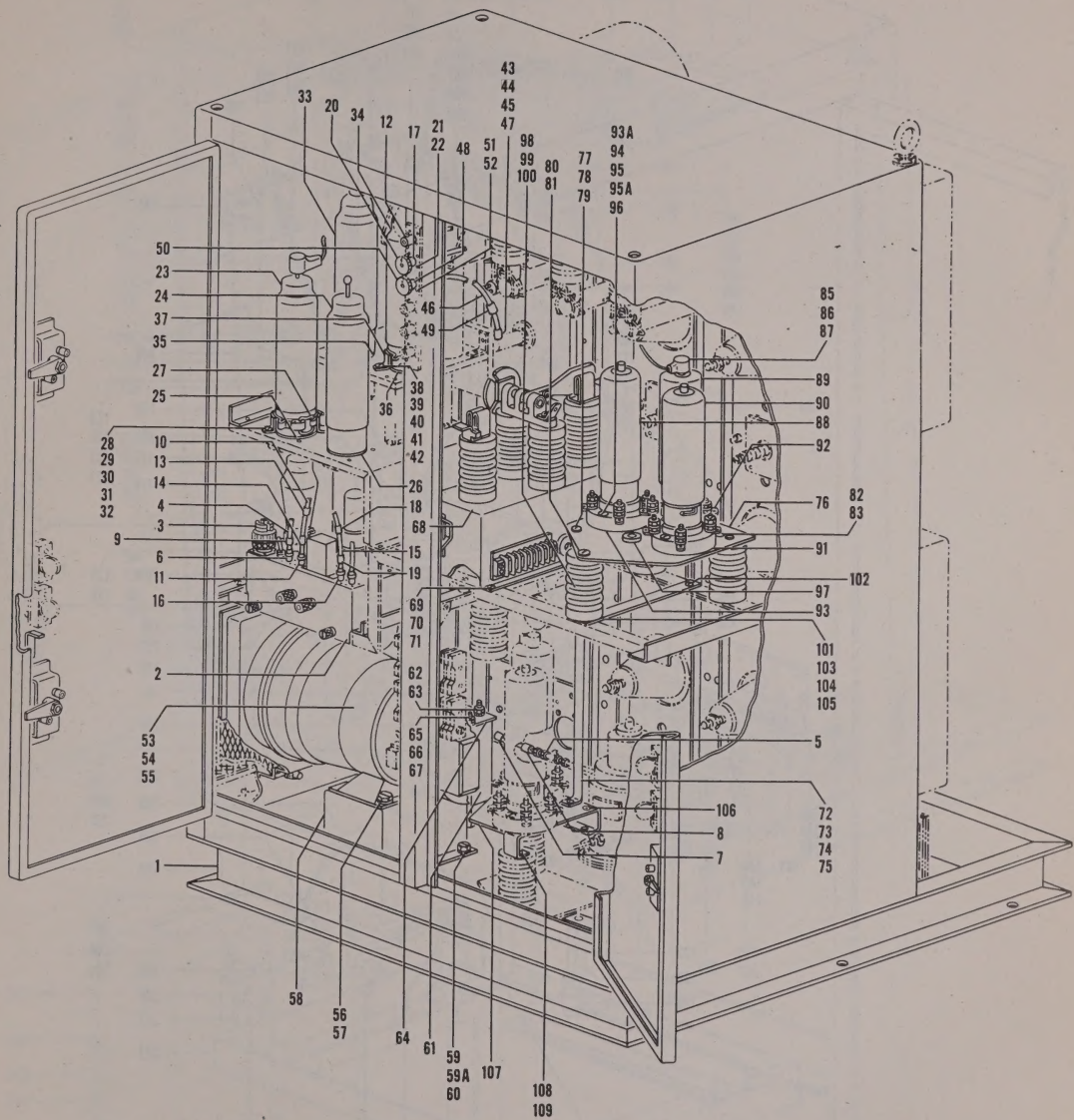

Figure 71. Radar Modulator MD–98/CPS–6B, Front View (Sheet 1 of 5 sheets, Index Nos. 1 thru 109)

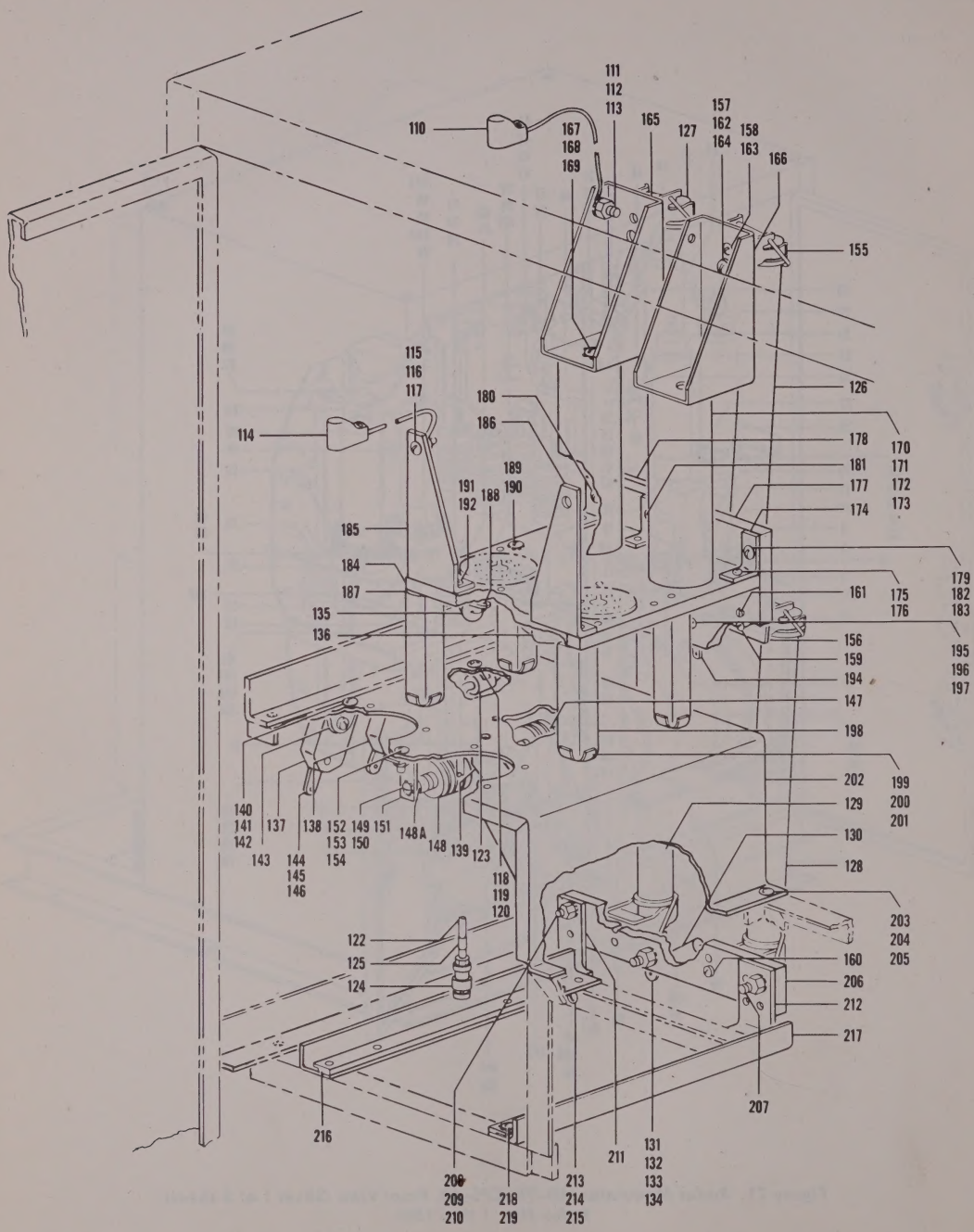

Figure 71. Radar Modulator MD-98/CPS-6B, Partial Front View (Sheet 2 of 5 sheets, Index Nos. 110 thru 219)

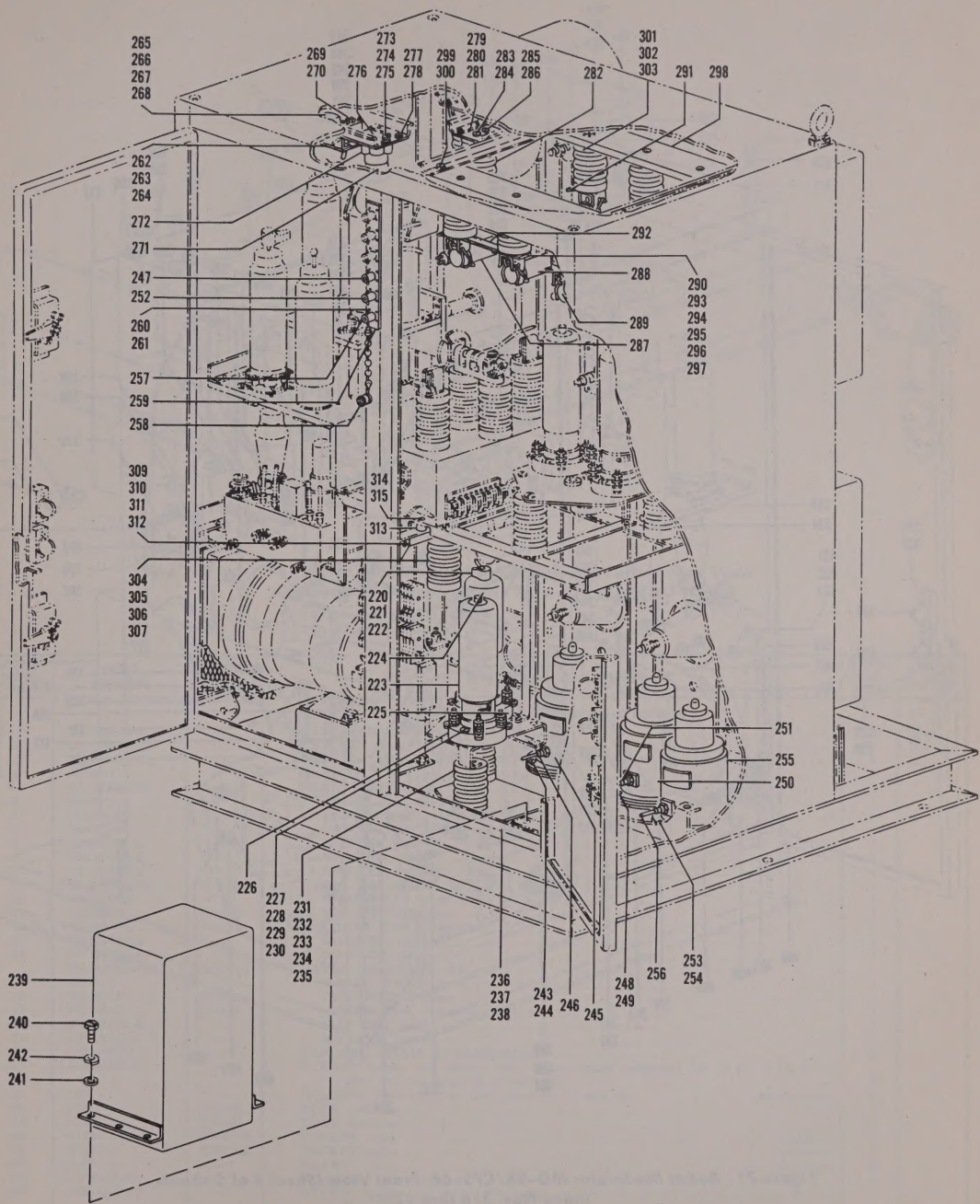

Figure 71. Radar Modulator MD–98/CPS–6B, Front View (Sheet 3 of 5 sheets, Index Nos. 220 thru 315)

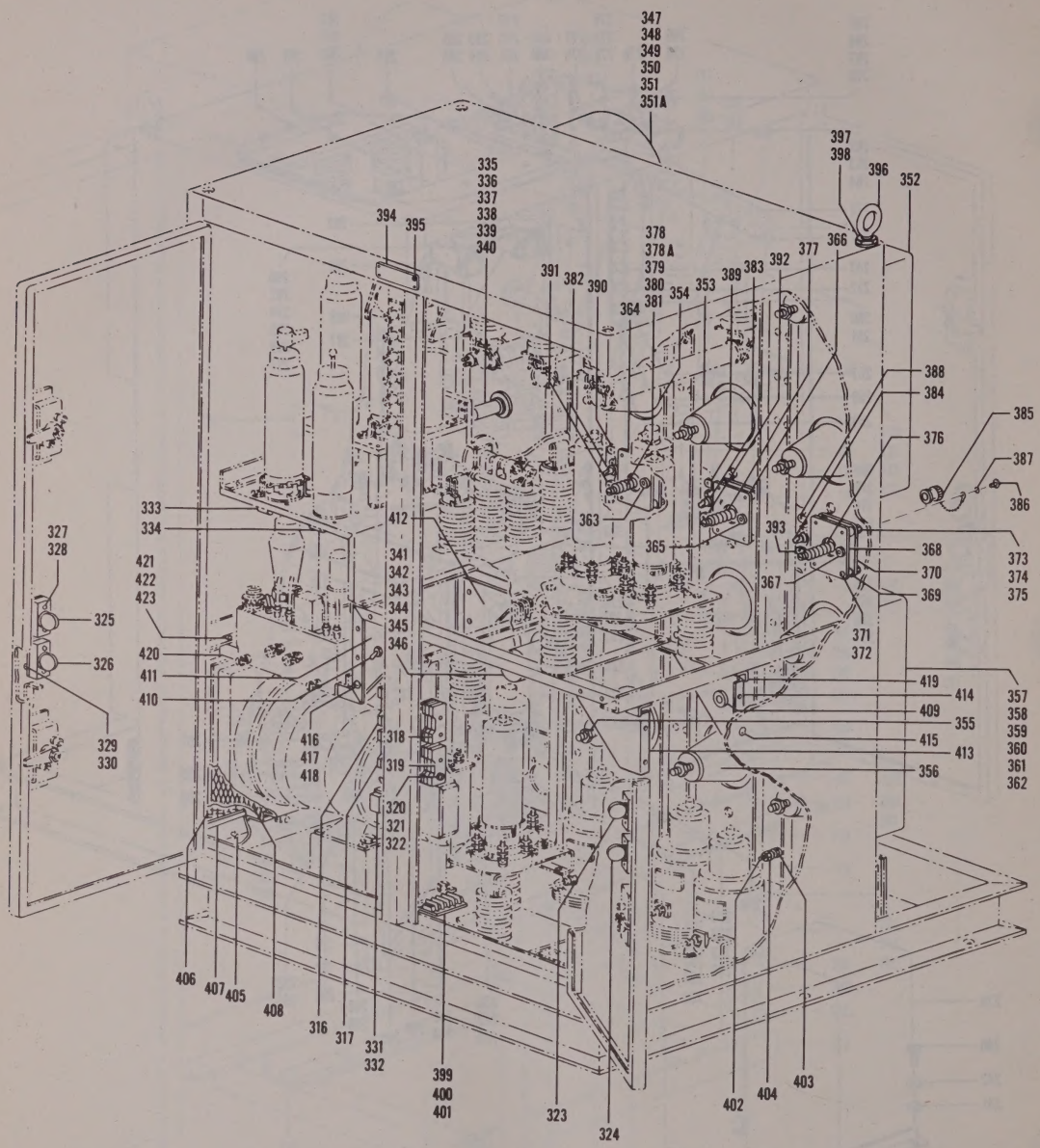

Figure 71. Radar Modulator MD–98/CPS–6B, Front View (Sheet 4 of 5 sheets, Index Nos. 316 thru 423)

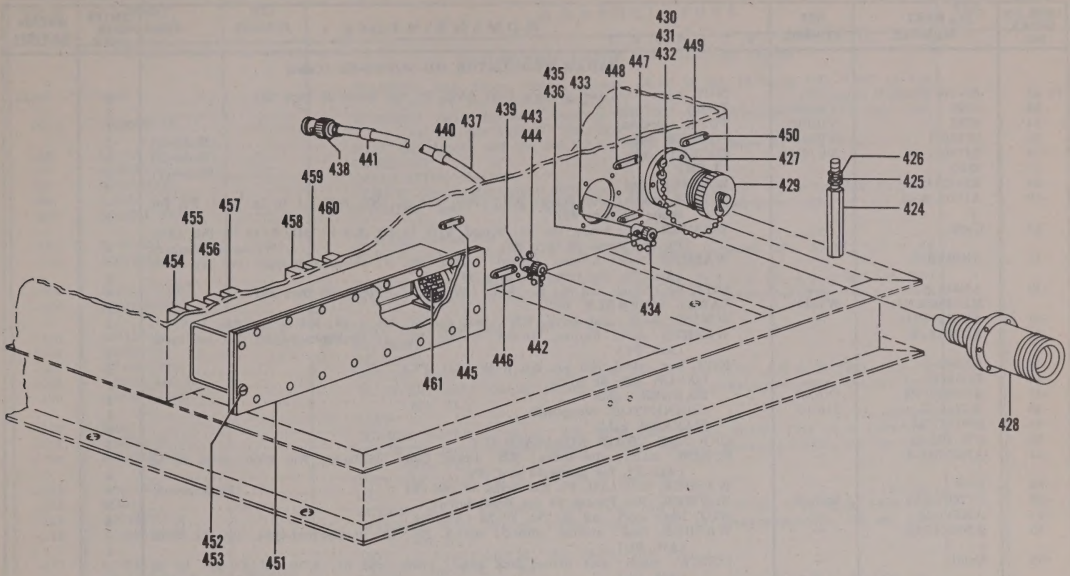

Figure 71. Radar Modulator MD–98/CPS–6B, Partial Rear View (Sheet 5 of 5 sheets, Index Nos. 424 thru 461)

FIG. & INDEX NO.	PART NUMBER	REF SYMBOL	NOMENCLATURE 1 2 3 4 5 6 7	UNITS PER ASSY	APPLI-CATION
			RADAR MODULATOR MD–98/CPS–6B		
71–	ML7352789G1	—	RADAR MODULATOR MD–98/CPS–6B	1	
–1	ML7300316G2	—	. CABINET (See Figure 72 for breakdown)	1	
–2	ML7664861G1	—	. TRIGGER AMPLIFIER AM–268/CPS–6B (See Figure 68 for breakdown)	1	
–3	AN3057–3	—	. CLAMP	1	
	ML7400857G1	W10103	. CABLE ASSEMBLY, RF	1	
–4	RG59/U	—	. . CABLE, RF: 56 in lg	1	
–5	UG260/U	P10106D	. . CONNECTOR, plug	1	
–6	UG260/U	P10601	. . CONNECTOR, plug	1	
–7	NP125775–C	—	. . MARKER, cable	1	
–8	NP125767–U	—	. . MARKER, cable	1	
–9	NP125767–N	—	. . MARKER, cable	1	
	ML7400858G1	W10104	. CABLE ASSEMBLY, RF	1	
–10	RG59/U	—	. . CABLE, RF: 50 in lg	1	
–11	UG260/U	P10602	. . CONNECTOR, plug	1	
–12	UG262/U	J10114	. . CONNECTOR, receptacle	1	
–13	NP125775–D	—	. . MARKER, cable	1	
–14	NP125767–P	—	. . MARKER, cable	1	
	ML7400858G2	W10105	. CABLE ASSEMBLY, RF	1	
–15	RG59/U	—	. . CABLE, RF: 53 in lg	1	
–16	UG260/U	P10603	. . CONNECTOR, plug	1	
–17	UG262/U	J10113	. . CONNECTOR, receptacle	1	
–18	NP125775–E	—	. . MARKER, cable	1	
–19	NP125767–R	—	. . MARKER, cable	1	
–20	CW–123/U	—	. CAP AND CHAIN SUBASSEMBLY	2	
–21	AN520B3–5	—	. SCREW, mach: slot drive; RH; brass, black oxidized; No. 3–56; 5/16 in lg (Att. Pt. for items 12, 17 and 20)	8	
–22	1203	—	. WASHER, lock (Att. Pt. for items 12, 17 and 20) (Shakeproof)	8	
–23	5C22	V10104	. TUBE, electron	1	
–24	5C22	V10103	. TUBE, electron	1	
–25	E1736–1	XV10104	. SOCKET, tube (Hubbell)	1	
–26	E1736–1	XV10103	. SOCKET, tube (Hubbell)	1	
–27	926G	—	. CLAMP (Birtcher)	2	
–28	K7872443P1	—	. WASHER, flat	8	
–29	AN515–8–12	—	. SCREW, mach: slot drive; RH; steel, cad pl; No. 8–32; 3/4 in lg (Att. Pt. for items 25 thru 28)	8	
–30	Coml	—	. WASHER, flat: brass, cad pl; round, 3/16 in ID, 3/8 in OD, 0.040 in thk (Att. Pt. for items 25 thru 28) (Wrought Washer)	8	
–31	AN936B8B	—	. WASHER, lock: bronze, tinned; round, No. 8; shakeproof-type, tw ext teeth (Att. Pt. for items 25 thru 28)	8	

FIG. & INDEX NO.	PART NUMBER	REF SYMBOL	NOMENCLATURE 1 2 3 4 5 6 7	UNITS PER ASSY	APPLI-CATION
			RADAR MODULATOR MD-98/CPS-6B (Cont)		
71-32	AN340-8	—	. NUT, hex: steel, cad pl; No. 8-32 (Att. Pt. for items 25 thru 28)	8	
-33	5C22	V10101	. TUBE, electron	1	
-34	5C22	V10102	. TUBE, electron	1	
-35	E1736-1	XV10101	. SOCKET, tube (Hubbell)	1	
-36	E1736-1	XV10102	. SOCKET, tube (Hubbell)	1	
-37	926G	—	. CLAMP (Birtcher)	2	
-38	K7872443P1	—	. WASHER, flat	8	
-39	AN515-8-16	—	. SCREW, mach: slot drive; RH; steel, cad pl; No. 8-32; 1 in lg (Att. Pt. for items 35 thru 38)	8	
-40	Coml	—	. WASHER, flat: brass, cad pl; round, 3/16 in ID, 3/8 in OD, 0.040 in thk (Att. Pt. for items 35 thru 38) (Wrought Washer)	8	
-41	AN936B8B	—	. WASHER, lock: bronze, tinned; round, No. 8; shakeproof-type, tw ext teeth (Att. Pt. for items 35 thru 38)	8	
-42	AN340-8	—	. NUT, hex: steel, cad pl; No. 8-32 (Att. Pt. for items 35 thru 38)	8	
	ML7400861G1	W10101	. CABLE ASSEMBLY, RF	1	
-43	AN515-4R10	—	. SCREW, mach: slot drive; RH; steel, cad pl; No. 4-40; 5/8 in lg (Att. Pt.)	1	
-44	AN936A4B	—	. WASHER, lock: bronze, tinned; round, No. 4; shakeproof-type, tw int teeth (Att. Pt.)	1	
-45	AN340-4	—	. NUT, hex: steel, cad pl; No. 4-40 (Att. Pt.)	1	
-46	RG59/U	—	. . CABLE, RF: 68 in lg	1	
-47	K7129230P6	E10105	. . HANGER, cable	1	
-48	UG262/U	J10107	. . CONNECTOR, receptacle	1	
-49	NP125775-A	—	. . MARKER, cable	2	
-50	CW-123/U	—	. CAP AND CHAIN SUBASSEMBLY	1	
-51	AN520B3-5	—	. SCREW, mach: slot drive; RH; brass, black oxidized; No. 3-56; 5/16 in lg (Att. Pt. for items 49 and 50)	4	
-52	1203	—	. WASHER, lock (Att. Pt. for items 49 and 50) (Shakeproof)	4	
-53	P7700708P2	B10102	. BLOWER (See Figure 54 for breakdown)	1	
-54	AN340-10	—	. NUT, hex: steel, cad pl; No. 10-24 (Att. Pt.)	4	
-55	AN936B10B	—	. WASHER, lock: bronze, tinned; round, No. 10; shakeproof-type, tw ext teeth (Att. Pt.)	4	
-56	Coml	—	. SCREW, mach: slot drive; hex head; brass, cad pl; 5/16 in-18; 3/4 in lg (Att. Pt.) (Amer Screw)	4	
-57	Coml	—	. WASHER, flat: brass, cad pl; round, 11/32 in ID, 5/8 in OD, 0.063 in thk (Att. Pt.) (Wrought Washer)	4	
-58	ML7772506G1	—	. BASE, motor	1	
-59	Coml	—	. SCREW, mach: slot drive; hex head; brass, cad pl; 5/16 in-18; 5/8 in lg (Att. Pt.) (Amer Screw)	4	
-59A	Coml	—	. WASHER, flat: brass, cad pl; round; 11/32 in ID, 5/8 in OD, 0.063 in thk (Att. Pt.) (Wrought Washer)	4	
-60	570066	—	. WASHER, lock (Att. Pt.) (Wemco)	4	
-61	7480421	T10102	. TRANSFORMER, power (GE)	1	
-62	AN340-416	—	. NUT, hex: steel, cad pl; 1/4 in-20 (Att. Pt.)	4	
-63	AN936B416B	—	. WASHER, lock: bronze, tinned; round, 1/4 in; shakeproof-type, tw ext teeth (Att. Pt.)	4	
-64	M7482890P1	—	. PLATE, mounting	1	
-65	K7028299P1	—	. STUD (Att. Pt.)	2	
-66	AN936B416B	—	. WASHER, lock: bronze, tinned; round, 1/4 in; shakeproof-type, tw ext teeth (Att. Pt.)	2	
-67	AN340-416	—	. NUT, hex: steel, cad pl; 1/4 in-20 (Att. Pt.)	2	
-68	ML7354001G2	S10101	. MODULATOR, radar (See Figure 73 for breakdown)	1	
-69	Coml	—	. SCREW, mach: slot drive; hex head; brass, cad pl; 1/4 in-20; 1/2 in lg (Att. Pt.) (Amer Screw)	4	
-70	AN936B416B	—	. WASHER, lock: bronze, tinned; round; 1/4 in; shakeproof-type, tw ext teeth (Att. Pt.)	4	
-71	AN340-416	—	. NUT, hex: steel, cad pl; 1/4 in-20 (Att. Pt.)	4	
-72	K7000163P1	—	. LEAD, electrical	1	
-73	AN515-6-5	—	. SCREW, mach: slot drive; RH; steel, cad pl; No. 6-32; 5/16 in lg (Att. Pt.)	2	
-74	AN936B6B	—	. WASHER, lock: bronze, tinned; round, No. 6; shakeproof-type, tw ext teeth (Att. Pt.)	2	
-75	AN340-6	—	. NUT, hex: steel, cad pl; No. 6-32 (Att. Pt.)	2	
-76	P7772500P1	—	. CHASSIS	1	
-77	AN520-10-7	—	. SCREW, mach: slot drive; RH; steel, cad pl; No. 10-32; 7/16 in lg (Att. Pt.)	1	
-78	AN936B10B	—	. WASHER, lock: bronze, tinned; round, No. 10; shakeproof-type, tw ext teeth (Att. Pt.)	1	
-79	AN345-10	—	. NUT, hex: steel, cad pl; No. 10-32 (Att. Pt.)	1	
-80	AN515-416-10	—	. SCREW, mach: slot drive; RH; steel, cad pl; 1/4 in-20; 5/8 in lg (Att. Pt.)	3	
-81	AN936A416B	—	. WASHER, lock: bronze, tinned; round, 1/4 in; shakeproof-type, tw int teeth (Att. Pt.)	3	
-82	AN515-4-5	—	. SCREW, mach: slot drive; RH; steel, cad pl; No. 4-40; 5/16 in lg (Att. Pt.)	3	
-83	AN936A4B	—	. WASHER, lock: bronze, tinned; round, No. 4; shakeproof-type, tw int teeth (Att. Pt.)	3	
✦ -85	36001	—	. CLIP (Millen)	3	
-86	AN520-10-5	—	. SCREW, mach: slot drive; RH; steel, cad pl; No. 10-32; 5/16 in lg (Att. Pt.)	3	
-87	AN936B10B	—	. WASHER, lock: bronze, tinned; round, No. 10; shakeproof-type, tw ext teeth (Att. Pt.)	3	
-88	371B	V10107	. TUBE, electron	1	
-89	371B	V10108	. TUBE, electron	1	
-90	371B	V10109	. TUBE, electron	1	
-91	211SB	XV10109	. SOCKET, tube (Johnson EF)	1	
-92	211SB	XV10108	. SOCKET, tube (Johnson EF)	1	
-93	211SB	XV10107	. SOCKET, tube (Johnson EF)	1	
-93A	K7874555P17	—	. WASHER, flat	6	
-94	AN520-10-18	—	. SCREW, mach: slot drive; RH; steel, cad pl; No. 10-32; 1-1/8 in lg (Att. Pt. for items 91 thru 93A)	6	

FIG. & INDEX NO.	PART NUMBER	REF SYMBOL	NOMENCLATURE 1 2 3 4 5 6 7	UNITS PER ASSY	APPLI-CATION
			RADAR MODULATOR MD–98/CPS–6B (Cont)		
71–95	Coml	—	. WASHER, flat: brass, cad pl; round, 13/64 in ID, 13/32 in OD, 0.040 in thk (Att. Pt. for items 91 thru 93A) ....(Wrought Washer)	6	
–95A	AN936B10B	—	. WASHER, lock: bronze, tinned; round, No. 10; shakeproof-type, tw ext teeth (Att. Pt. for items 91 thru 93A)	6	
–96	AN345–10	—	. NUT, hex: steel, cad pl; No. 10–32 (Att. Pt. for items 91 thru 93A)	6	
–97	M2R53P12	—	. GROMMET	1	
–98	K7128740P1	—	. INSULATOR, standoff	3	
–99	AN515–416–10	—	. SCREW, mach: slot drive; RH; steel, cad pl; 1/4 in–20; 5/8 in lg (Att. Pt.)	3	
–100	AN936B416B	—	. WASHER, lock: bronze, tinned; round, 1/4 in; shakeproof-type, tw ext teeth (Att. Pt.)	3	
–101	K7001571	—	. PLATE, reinforcing	1	
–102	AN520B10–8	—	. SCREW, mach: slot drive; RH; brass, black oxidized; No. 10–32; 1/2 in lg (Att. Pt.)	2	
–103	AN505–416R8	—	. SCREW, mach: Phillips drive; FH; steel, cad pl; 1/4 in–20; 1/2 in lg (Att. Pt.)	1	
–104	AN936B10B	—	. WASHER, lock: bronze, tinned; round, No. 10; shakeproof-type, tw ext teeth (Att. Pt.)	2	
–105	AN345–10	—	. NUT, hex: steel, cad pl; No. 10–32 (Att. Pt.)	2	
–106	M2R53P16	—	. GROMMET	1	
–107	M7400832P1	—	. CHASSIS	1	
–108	AN515–416–10	—	. SCREW, mach: slot drive; RH; steel, cad pl; 1/4 in–20; 5/8 in lg (Att. Pt.)	3	
–109	AN936B416B	—	. WASHER, lock: bronze, tinned; round, 1/4 in; shakeproof-type, tw ext teeth (Att. Pt.)	3	
–110	36001	—	. CLIP ....(Millen)	2	
–111	AN520–10–7	—	. SCREW, mach: slot drive; RH; steel, cad pl; No. 10–32; 7/16 in lg (Att. Pt.)	2	
–112	AN936B10B	—	. WASHER, lock: bronze, tinned; round, No. 10; shakeproof-type, tw ext teeth (Att. Pt.)	2	
–113	AN345–10	—	. NUT, hex: steel, cad pl; No. 10–32 (Att. Pt.)	2	
–114	36001	—	. CLIP ....(Millen)	2	
–115	AN520–10–5	—	. SCREW, mach: slot drive; RH; steel, cad pl; No. 10–32; 5/16 in lg (Att. Pt.)	2	
–116	AN936B10B	—	. WASHER, lock: bronze, tinned; round, No. 10; shakeproof-type, tw ext teeth (Att. Pt.)	2	
–117	AN345–10	—	. NUT, hex: steel, cad pl; No. 10–32 (Att. Pt.)	2	
	ML7400860G1	W10102	. CABLE ASSEMBLY, RF	1	
–118	AN515–4R10	—	. SCREW, mach: Phillips drive; RH; steel, cad pl; No. 4–40; 5/8 in lg (Att. Pt.)	1	
–119	AN936B6B	—	. WASHER, lock: bronze, tinned; round, No. 4; shakeproof-type, tw ext teeth (Att. Pt.)	1	
–120	AN340–6	—	. NUT, hex: steel, cad pl; No. 4–40 (Att. Pt.)	1	
–121	RG59/U	—	. . CABLE, RF: 37-1/2 in lg	1	
–122	UG260/U	P10605	. . CONNECTOR, plug	1	
–123	9175	E10104	. . HANGER, cable ....(Industrial Prod Co)	1	
–124	NP125775–B	—	. . MARKER, cable	1	
–125	NP125767–L	—	. . MARKER, cable	1	
–126	M7480938P14	R10101	. RESISTOR, fixed	1	
–127	M7480938P14	R10102	. RESISTOR, fixed	1	
–128	M7480938P14	R10103	. RESISTOR, fixed	1	
–129	M7480938P14	R10104	. RESISTOR, fixed	1	
–130	RC40BF333J	R10109	. RESISTOR, fixed	1	
–131	2101–10–00	—	. TERMINAL, lug ....(Shakeproof)	2	
–132	AN520–10–10	—	. SCREW, mach: slot drive; RH; steel, cad pl; No. 10–32; 5/8 in lg (Att. Pt.)	2	
–133	AN936B10B	—	. WASHER, lock: bronze, tinned; round, No. 10; shakeproof-type, tw ext teeth (Att. Pt.)	2	
–134	AN345–10	—	. NUT, hex: steel, cad pl; No. 10–32 (Att. Pt.)	2	
–135	RC20BF223J	R10105	. RESISTOR, fixed	1	
–136	RC20BF223J	R10106	. RESISTOR, fixed	1	
–137	CM55B101K	C10102	. CAPACITOR, fixed	1	
–138	CM55B101K	C10103	. CAPACITOR, fixed	1	
–139	CM55B101K	C10104	. CAPACITOR, fixed	1	
	ML7876997G1	—	. MOUNTING, capacitor	3	
–140	AN515–6–6	—	. SCREW, mach: slot drive; RH; steel, cad pl; No. 6–32; 3/8 in lg (Att. Pt.)	3	
–141	AN936B6B	—	. WASHER, lock: bronze, tinned; round, No. 6; shakeproof-type, tw ext teeth (Att. Pt.)	3	
–142	AN340–6	—	. NUT, hex: steel, cad pl; No. 6–32 (Att. Pt.)	3	
–143	K7873976	—	. . BRACKET	1	
–144	K7861852P1	—	. . TERMINAL, lug	1	
–145	AN515–6–4	—	. . SCREW, mach: slot drive; RH; steel, cad pl; No. 6–32; 1/4 in lg (Att. Pt. for items 143 and 144)	2	
–146	AN936A6B	—	. . WASHER, lock: bronze, tinned; round, No. 6; shakeproof-type, tw int teeth (Att. Pt. for items 143 and 144)	3	
–147	ML7481097G1	L10103	. COIL, RF	1	
–148	ML7481097G1	L10102	. COIL, RF	1	
–148A	K7874555P17	—	. WASHER, flat	2	
–149	AN515–8–6	—	. SCREW, mach: slot drive; RH; steel, cad pl; No. 8–32; 3/8 in lg (Att. Pt.)	2	
–150	AN936B8B	—	. WASHER, lock: bronze, tinned; round, No. 8; shakeproof-type, tw ext teeth (Att. Pt.)	2	
–151	K7989133P1	—	. BRACKET	1	
–152	AN515–6–6	—	. SCREW, mach: slot drive; RH; steel, cad pl; No. 6–32; 3/8 in lg (Att. Pt.)	1	
–153	AN936B6B	—	. WASHER, lock: bronze, tinned; round, No. 6; shakeproof-type, tw ext teeth (Att. Pt.)	1	
–154	AN340–6	—	. NUT, hex: steel, cad pl; No. 6–32 (Att. Pt.)	1	
–155	K17–7A	—	. CLIP ....(Trumbull)	8	
–156	K7000148P1	—	. BAR, bus	2	
–157	AN515–416–7	—	. SCREW, mach: slot drive; RH; steel, cad pl; 1/4 in–20; 7/16 in lg (Att. Pt. for item 155)	2	
–158	AN515–4–7	—	. SCREW, mach: slot drive; RH; steel, cad pl; No. 4–40; 7/16 in lg (Att. Pt. for item 155)	2	

FIG. & INDEX NO.	PART NUMBER	REF SYMBOL	NOMENCLATURE 1 2 3 4 5 6 7	UNITS PER ASSY	APPLI-CATION
			RADAR MODULATOR MD–98/CPS–6B (Cont)		
71–159	AN515–416–12	—	. SCREW, mach: slot drive; RH; steel, cad pl; 1/4 in–20; 3/4 in lg (Att. Pt. for items 155 and 156)	6	
–160	AN515–4–12	—	. SCREW, mach: slot drive; RH; steel, cad pl; No. 4–40; 3/4 in lg (Att. Pt. for item 155)	2	
–161	AN515–4–14	—	. SCREW, mach: slot drive; RH; steel, cad pl; No. 4–40; 7/8 in lg (Att. Pt. for items 155 and 156)	4	
–162	AN936A416B	—	. WASHER, lock: bronze, tinned; round, 1/4 in; shakeproof-type, tw int teeth (Att. Pt. for items 155 and 156)	8	
–163	Coml	—	. WASHER, flat: brass, cad pl; round, 1/8 in ID, 1/4 in OD, 0.032 in thk (Att. Pt. for items 155 and 156) (Wrought Washer)	8	
–164	K7000076P1	—	. NUT, anchor (Att. Pt. for items 155 and 156)	8	
–165	M7400815P1	—	. BRACKET	1	
–166	M7400815P2	—	. BRACKET	1	
–167	K7874555P17	—	. WASHER, flat	2	
–168	AN520–10–7	—	. SCREW, mach: slot drive; RH; steel, cad pl; No. 10–32; 7/16 in lg (Att. Pt. for items 165, 166 and 167)	2	
–169	AN936B10B	—	. WASHER, lock: bronze, tinned; round, No. 10; shakeproof-type, tw ext teeth (Att. Pt. for items 165, 166 and 167)	2	
–170	NS4W0640	—	. INSULATOR, standoff	2	
–171	K7874555P17	—	. WASHER, flat	2	
–172	AN520–10–12	—	. SCREW, mach: slot drive; RH; steel, cad pl; No. 10–32; 3/4 in lg (Att. Pt. for items 170 and 171)	2	
–173	AN936B10B	—	. WASHER, lock: bronze, tinned; round, No. 10; shakeproof-type, tw ext teeth (Att. Pt. for items 170 and 171)	2	
–174	K7000102P1	—	. BRACKET	4	
–175	AN520–10–16	—	. SCREW, mach: slot drive; RH; steel, cad pl; No. 10–32; 1–in lg (Att. Pt.)	4	
–176	AN345–10	—	. NUT, hex: steel, cad pl; No. 10–32 (Att. Pt.)	4	
–177	M7400808P1	—	. PLATE, mounting	1	
–178	K7000018P1	—	. BAR, bus	1	
–179	AN520–10–12	—	. SCREW, mach: slot drive; RH; steel, cad pl; No. 10–32; 3/4 in lg (Att. Pt. for item 177)	2	
–180	AN520–10–16	—	. SCREW, mach: slot drive; RH; steel, cad pl; No. 10–32; 1 in lg (Att. Pt. for item 177)	1	
–181	AN520–10–14	—	. SCREW, mach: slot drive; RH; steel, cad pl; No. 10–32; 7/8 in lg (Att. Pt. for items 177 and 178)	2	
–182	AN936B10B	—	. WASHER, lock: bronze, tinned; round, No. 10; shakeproof-type, tw ext teeth (Att. Pt. for items 177 and 178)	7	
–183	AN345–10	—	. NUT, hex: steel, cad pl; No. 10–32 (Att. Pt. for items 177 and 178)	7	
–184	P7771492P1	—	. PLATE, mounting	1	
–185	K7028263P1	—	. BRACKET	1	
–186	K7028263P2	—	. BRACKET	1	
–187	K7874555P17	—	. WASHER, flat	4	
–188	K7869410P1	—	. TERMINAL, lug	4	
–189	AN520–10–14	—	. SCREW, mach: slot drive; RH; steel, cad pl; No. 10–32; 7/8 in lg (Att. Pt. for items 184 thru 187)	4	
–190	AN936B10B	—	. WASHER, lock: bronze, tinned; round, No. 10; shakeproof-type, tw ext teeth (Att. Pt. for items 184 thru 187)	4	
–191	AN520–10–16	—	. SCREW, mach: slot drive; RH; steel, cad pl; No. 10–32; 1 in lg (Att. Pt. for items 185, 186 and 188)	2	
–192	AN345–10	—	. NUT, hex: steel, cad pl; No. 10–32 (Att. Pt. for items 185, 186 and 188)	2	
✦ –194	K7869410P1	—	. TERMINAL, lug	2	
–195	AN520–10–14	—	. SCREW, mach: slot drive; RH; steel, cad pl; No. 10–32; 7/8 in lg (Att. Pt.)	2	
–196	AN936B10B	—	. WASHER, lock: bronze, tinned; round, No. 10; shakeproof-type, tw ext teeth (Att. Pt.)	2	
–197	AN345–10	—	. NUT, hex: steel, cad pl; No. 10–32 (Att. Pt.)	2	
–198	NS4W1224	—	. INSULATOR, standoff	4	
–199	K7107772P1	—	. CLIP	4	
–200	AN520–10–7	—	. SCREW, mach: slot drive; RH; steel, cad pl; No. 10–32; 7/16 in lg (Att. Pt. for items 198 and 199)	4	
–201	AN936B10B	—	. WASHER, lock: bronze, tinned; round, No. 10; shakeproof-type, tw ext teeth (Att. Pt. for items 198 and 199)	4	
–202	ML7772509G1	—	. CHASSIS	1	
–203	AN515–416–8	—	. SCREW, mach: slot drive; RH; steel, cad pl; 1/4 in–20; 1/2 in lg (Att. Pt.)	4	
–204	AN936B416B	—	. WASHER, lock: bronze, tinned; round, 1/4 in; shakeproof-type, tw ext teeth (Att. Pt.)	4	
–205	AN340–416	—	. NUT, hex: steel, cad pl; 1/4 in–20 (Att. Pt.)	4	
–206	M7400809P1	—	. PLATE, mounting	1	
–207	AN520–10–12	—	. SCREW, mach: slot drive; RH; steel, cad pl; No. 10–32; 3/4 in lg (Att. Pt.)	4	
–208	AN520–10–10	—	. SCREW, mach: slot drive; RH; steel, cad pl; No. 10–32; 5/8 in lg (Att. Pt.)	2	
–209	AN936B10B	—	. WASHER, lock: bronze, tinned; round, No. 10; shakeproof-type, tw ext teeth (Att. Pt.)	6	
–210	AN345–10	—	. NUT, hex: steel, cad pl; No. 10–32 (Att. Pt.)	6	
–211	K7004551P1	—	. BRACKET	1	
–212	K7004550P1	—	. BRACKET	1	
–213	AN515–6–7	—	. SCREW, mach: slot drive; RH; steel, cad pl; No. 8–32; 7/16 in lg (Att. Pt. for items 211 and 212)	6	
–214	AN936B8B	—	. WASHER, lock: bronze, tinned; round, No. 8; shakeproof-type, tw ext teeth (Att. Pt. for items 211 and 212)	6	
–215	AN340–8	—	. NUT, hex: steel, cad pl; No. 8–32 (Att. Pt. for items 211 and 212)	6	
–216	ML7772512G1	—	. RAIL SUBASSEMBLY, guide	1	
–217	ML7772514G1	—	. RAIL SUBASSEMBLY, guide	1	
–218	AN515–416–8	—	. SCREW, mach: slot drive; RH; steel, cad pl; 1/4 in–20; 1/2 in lg (Att. Pt. for items 216 and 217)	4	
–219	AN936B416B	—	. WASHER, lock: bronze, tinned; round, 1/4 in; shakeproof-type, tw ext teeth (Att. Pt. for items 216 and 217)	4	

FIG. & INDEX NO.	PART NUMBER	REF SYMBOL	NOMENCLATURE 1 2 3 4 5 6 7	UNITS PER ASSY	APPLI-CATION
			RADAR MODULATOR MD–98/CPS–6B (Cont)		
71–220	36002	—	. CLIP (Millen)	2	
–221	AN515–416–10	—	. SCREW, mach: slot drive; RH; steel, cad pl; 1/4 in–20; 5/8 in lg (Att. Pt.)	2	
–222	AN936B416B	—	. WASHER, lock: bronze, tinned; round, 1/4 in; shakeproof-type, tw ext teeth (Att. Pt.)	2	
–223	371B	V10105	. TUBE, electron	1	
–224	371B	V10106	. TUBE, electron	1	
–225	211SB	XV10106	. SOCKET, tube (Johnson EF)	1	
–226	211SB	XV10105	. SOCKET, tube (Johnson EF)	1	
–227	K7874555P17	—	. WASHER, flat	4	
–228	AN520–10–18	—	. SCREW, mach: slot drive; RH; steel, cad pl; No. 10–32; 1-1/8 in lg (Att. Pt. for items 225, 226 and 227)	4	
–229	AN936B10B	—	. WASHER, lock: bronze, tinned; round, No. 10; shakeproof-type, tw ext teeth (Att. Pt. for items 225, 226 and 227)	4	
–230	AN345–10	—	. NUT, hex: steel, cad pl; No. 10–32 (Att. Pt. for items 225, 226 and 227)	4	
–231	K7128740P1	—	. INSULATOR, standoff	3	
–232	AN515–416–10	—	. SCREW, mach: slot drive; RH; steel, cad pl; 1/4 in–20; 5/8 in lg (Att. Pt.)	3	
–233	AN936B416B	—	. WASHER, lock: bronze, tinned; round, 1/4 in; shakeproof-type, tw ext teeth (Att. Pt.)	3	
–234	AN515–4–4	—	. SCREW, mach: slot drive; RH; steel, cad pl; No. 4–40; 1/4 in lg (Att. Pt.)	3	
–235	AN936A4B	—	. WASHER, lock: bronze, tinned; round, No. 4; shakeproof-type, tw int teeth (Att. Pt.)	3	
–236	M7404441P1	—	. PLATE, mounting	1	
–237	AN515–416–6	—	. SCREW, mach: slot drive; RH; steel, cad pl; 1/4 in–20; 3/8 in lg (Att. Pt.)	3	
–238	AN936B416B	—	. WASHER, lock: bronze, tinned; round, 1/4 in; shakeproof-type, tw ext teeth (Att. Pt.)	3	
–239	7403403	T10103	. TRANSFORMER, power (GE)	1	
–240	Coml	—	. SCREW, mach: slot drive; hex head; brass, cad pl; 5/16 in–18; 5/8 in lg (Att. Pt.) (Amer Screw)	6	
–241	Coml	—	. WASHER, flat: brass, cad pl; round, 11/32 in ID, 5/8 in OD, 0.063 in thk (Att. Pt.) (Wrought Washer)	6	
–242	570066	—	. WASHER, lock (Att. Pt.) (Wemco)	6	
	P7700524P1	E10101	. VOLTAGE DIVIDER BOX	1	
–243	AN520–10–10	—	. SCREW, mach: slot drive; RH; steel, cad pl; No. 10–32; 5/8 in lg (Att. Pt.)	3	
–244	AN936B10B	—	. WASHER, lock: bronze, tinned; round, No. 10; shakeproof-type, tw ext teeth (Att. Pt.)	3	
–245	No Number	—	. . CAPACITOR ASSEMBLY, fixed (Included in E10101)	1	
–246	RG59/U	W10106	. . CABLE, RF: 65 in lg (Included in E10101)	1	
–247	UG262/U	J10108	. . CONNECTOR, receptacle (Included in E10101)	1	
	P7700524P1	E10102	. VOLTAGE DIVIDER BOX	1	
–248	AN520–10–10	—	. SCREW, mach: slot drive; RH; steel, cad pl; No. 10–32; 5/8 in lg (Att. Pt.)	3	
–249	AN936B10B	—	. WASHER, lock: bronze, tinned; round, No. 10; shakeproof-type, tw ext teeth (Att. Pt.)	3	
–250	No Number	—	. . CAPACITOR ASSEMBLY, fixed (Included in E10102)	1	
–251	RG59/U	W10107	. . CABLE, RF: 65 in lg (Included in E10102)	1	
–252	UG262/U	J10109	. . CONNECTOR, receptacle (Included in E10102)	1	
	P7700524P1	E10103	. VOLTAGE DIVIDER BOX	1	
–253	AN520–10–10	—	. SCREW, mach: slot drive; RH; steel, cad pl; No. 10–32; 5/8 in lg (Att. Pt.)	3	
–254	AN936B10B	—	. WASHER, lock: bronze, tinned; round, No. 10; shakeproof-type, tw ext teeth (Att. Pt.)	3	
–255	No Number	—	. . CAPACITOR ASSEMBLY, fixed (Included in E10103)	1	
–256	RG59/U	W10108	. . CABLE, RF: 65 in lg (Included in E10103)	1	
–257	UG262/U	J10110	. . CONNECTOR, receptacle (Included in E10103)	1	
–258	CW–123/U	—	. CAP AND CHAIN SUBASSEMBLY	3	
–259	NP136029	—	. PLATE, identification	1	
–260	AN520B3–6	—	. SCREW, mach: slot drive; RH; brass, black oxidized; No. 3–56; 3/8 in lg (Att. Pt. for items 247, 252, 257 and 258)	12	
–261	1203	—	. WASHER, lock (Att. Pt. for items 247, 252, 257 and 258) (Shakeproof)	12	
–262	M7482865P1	—	. PLATE, mounting	1	
–263	AN515–8–5	—	. SCREW, mach: slot drive; RH; steel, cad pl; No. 8–32; 5/16 in lg (Att. Pt.)	6	
–264	AN936B8B	—	. WASHER, lock: bronze, tinned; round, No. 8; shakeproof-type, tw ext teeth (Att. Pt.)	6	
–265	2679	J10111	. CONNECTOR ASSEMBLY (GE)	1	
–266	AN515–8–5	—	. SCREW, mach: slot drive; RH; steel, cad pl; No. 8–32; 5/16 in lg (Att. Pt.)	2	
–267	AN936B8B	—	. WASHER, lock: bronze, tinned; round, No. 8; shakeproof-type, tw ext teeth (Att. Pt.)	2	
–268	AN340–8	—	. NUT, hex: steel, cad pl; No. 8–32 (Att. Pt.)	2	
–269	ST22N	S10111	. SWITCH, toggle	1	
–270	1222–1	—	. WASHER, lock (Att. Pt.) (Shakeproof)	1	
–271	Coml	I10101	. LAMP, incandescent: Mazda 50A/RS, 110 v, 50 w	1	
–272	K7118447P1	XI10101	. LAMPHOLDER	1	
–273	AN520–10–14	—	. SCREW, mach: slot drive; RH; steel, cad pl; No. 10–32; 7/8 in lg (Att. Pt.)	2	
–274	AN936B10B	—	. WASHER, lock: bronze, tinned; round, No. 10; shakeproof-type, tw ext teeth (Att. Pt.)	2	
–275	AN345–10	—	. NUT, hex: steel, cad pl; No. 10–32 (Att. Pt.)	2	
–276	K7028262P1	—	. PLATE, mounting	1	
–277	AN515–8–5	—	. SCREW, mach: slot drive; RH; steel, cad pl; No. 8–32; 5/16 in lg (Att. Pt.)	4	
–278	AN936B8B	—	. WASHER, lock: bronze, tinned; round, No. 8; shakeproof-type, tw ext teeth (Att. Pt.)	4	
–279	K7000125P1	—	. PLATE, mounting	2	
–280	AN515–8–5	—	. SCREW, mach: slot drive; RH; steel, cad pl; No. 8–32; 5/16 in lg (Att. Pt.)	8	
–281	AN936B8B	—	. WASHER, lock: bronze, tinned; round, No. 8; shakeproof-type, tw ext teeth (Att. Pt.)	8	
–282	K7128740P1	—	. INSULATOR, standoff	2	
–283	AN515–416–10	—	. SCREW, mach: slot drive; RH; steel, cad pl; 1/4 in–20; 5/8 in lg (Att. Pt.)	2	
–284	AN936A416B	—	. WASHER, lock: bronze, tinned; round, 1/4 in; shakeproof-type, tw int teeth (Att. Pt.)	2	

FIG. & INDEX NO.	PART NUMBER	REF SYMBOL	NOMENCLATURE 1 2 3 4 5 6 7	UNITS PER ASSY	APPLI-CATION
			RADAR MODULATOR MD–98/CPS–6B (Cont)		
71–285	AN515–4–4	—	. SCREW, mach: slot drive; RH; steel, cad pl; No. 4–40; 1/4 in lg (Att. Pt.)	2	
–286	AN936A4B	—	. WASHER, lock: bronze, tinned; round, No. 4; shakeproof-type, tw int teeth (Att. Pt.)	2	
–287	RC40BF182K	R10110	. RESISTOR, fixed	1	
–288	RC40BF182K	R10111	. RESISTOR, fixed	1	
–289	RC40BF182K	R10112	. RESISTOR, fixed	1	
–290	K17–7A	—	. CLIP (Trumbull)	6	
–291	K7000150P1	—	. TERMINAL, lug	6	
–292	M7405273P1	—	. PLATE, reinforcing	1	
–293	AN515–416–12	—	. SCREW, mach: slot drive; RH; steel, cad pl; 1/4 in–20; 3/4 in lg (Att. Pt. for items 290, 291 and 292)	6	
–294	AN936A416B	—	. WASHER, lock: bronze, tinned; round, 1/4 in; shakeproof-type, tw ext teeth (Att. Pt. for items 290, 291 and 292)	6	
–295	AN515–4–8	—	. SCREW, mach: slot drive; RH; steel, cad pl; No. 4–40; 1/2 in lg (Att. Pt. for items 290, 291 and 292)	6	
–296	Coml	—	. WASHER, flat: brass, cad pl; round, 1/8 in ID, 1/4 in OD; 0.032 in thk (Att. Pt. for items 290, 291 and 292) (Wrought Washer)	6	
–297	AN936A4B	—	. WASHER, lock: bronze, tinned; round, No. 4; shakeproof-type, tw int teeth (Att. Pt. for items 290, 291 and 292)	6	
–298	M7482886P1	—	. BRACKET	2	
–299	AN515–8–5	—	. SCREW, mach: slot drive; RH; steel, cad pl; No. 8–32; 5/16 in lg (Att. Pt.)	8	
–300	AN936B8B	—	. WASHER, lock: bronze, tinned; round, No. 8; shakeproof-type, tw ext teeth (Att. Pt.)	8	
–301	K7128740P1	—	. INSULATOR, standoff	6	
–302	AN515–416–10	—	. SCREW, mach: slot drive; RH; steel, cad pl; 1/4 in–20; 5/8 in lg (Att. Pt.)	6	
–303	AN936B416B	—	. WASHER, lock: bronze, tinned; round, 1/4 in; shakeproof-type, tw ext teeth (Att. Pt.)	6	
–304	K7128740P1	—	. INSULATOR, standoff	2	
–305	AN515–416–10	—	. SCREW, mach: slot drive; RH; steel, cad pl; 1/4 in–20; 5/8 in lg (Att. Pt.)	2	
–306	AN936A416B	—	. WASHER, lock: bronze, tinned; round, 1/4 in; shakeproof-type, tw int teeth (Att. Pt.)	2	
–307	AN515–4–5	—	. SCREW, mach: slot drive; RH; steel, cad pl; No. 4–40; 5/16 in lg (Att. Pt.)	2	
–308	AN936A4B	—	. WASHER, lock: bronze, tinned; round, No. 4; shakeproof-type, tw int teeth (Att. Pt.)	2	
–309	ML7400873G1	—	. BRACKET	1	
–310	AN520–10–7	—	. SCREW, mach: slot drive; RH; steel, cad pl; No. 10–32; 7/16 in lg (Att. Pt.)	4	
–311	AN936B10B	—	. WASHER, lock: bronze, tinned; round, No. 10; shakeproof-type, tw ext teeth (Att. Pt.)	4	
–312	AN345–10	—	. NUT, hex: steel, cad pl; No. 10–32 (Att. Pt.)	4	
–313	M7480544P21K	—	. POST, spacing	2	
–314	AN520–10–7	—	. SCREW, mach: slot drive; RH; steel, cad pl; No. 10–32; 7/16 in lg (Att. Pt.)	2	
–315	AN936B10B	—	. WASHER, lock: bronze, tinned; round, No. 10; shakeproof-type, tw ext teeth (Att. Pt.)	2	
–316	M7460330G5	S10109A	. SWITCH, interlock	1	
–317	M7460330G5	S10110A	. SWITCH, interlock	1	
–318	M7460330G5	S10106A	. SWITCH, interlock	1	
–319	M7460330G5	S10107A	. SWITCH, interlock	1	
–320	AN515–6–18	—	. SCREW, mach: slot drive; RH; steel, cad pl; No. 6–32; 1-1/8 in lg (Att. Pt. for items 316 thru 319)	8	
–321	AN936B6B	—	. WASHER, lock: bronze, tinned; round, No. 6; shakeproof-type, tw ext teeth (Att. Pt. for items 316 thru 319)	8	
–322	AN340–6	—	. NUT, hex: steel, cad pl; No. 6–32 (Att. Pt. for items 316 thru 319)	8	
–323	ML7460330G2	S10106B	. SWITCH, interlock	1	
–324	ML7460330G2	S10107B	. SWITCH, interlock	1	
–325	ML7460330G2	S10109B	. SWITCH, interlock	1	
–326	ML7460330G2	S10110B	. SWITCH, interlock	1	
–327	AN515–6–10	—	. SCREW, mach: slot drive; RH; steel, cad pl; No. 6–32; 5/8 in lg (Att. Pt. for items 323 thru 326)	8	
–328	AN936A6B	—	. WASHER, lock: bronze, tinned; round, No. 6; shakeproof-type, tw int teeth (Att. Pt. for items 323 thru 326)	8	
–329	M7480544P9F	—	. POST, spacing	8	
–330	AN515B6–5	—	. SCREW, mach: slot drive; RH; brass, black oxidized; No. 6–32; 5/16 in lg (Att. Pt.)	8	
–331	ST22N	S10108	. SWITCH, toggle	1	
–332	1222–1	—	. WASHER, lock (Att. Pt.) (Shakeproof)	1	
–333	RC20BF223J	R10107	. RESISTOR, fixed	1	
–334	RC20BF223J	R10108	. RESISTOR, fixed	1	
–335	7403407	T10104	. TRANSFORMER, power (GE)	1	
–336	Coml	—	. SCREW, mach: slot drive; hex head; brass, black oxidized; 1/4 in–20; 1/2 in lg (Att. Pt.) (Amer Screw)	4	
–337	AN936B416B	—	. WASHER, lock: bronze, tinned; round, 1/4 in; shakeproof-type, tw ext teeth (Att. Pt.)	4	
–338	AN340–416	—	. NUT, hex: steel, cad pl; 1/4 in–20 (Att. Pt.)	4	
–339	Coml	—	. SCREW, mach: slot drive; hex head; brass, black oxidized; 1/4 in–20; 5/8 in lg (Att. Pt.) (Amer Screw)	10	
–340	1914	—	. WASHER, lock (Att. Pt.) (Shakeproof)	10	
–341	7403406P1	L10101	. REACTOR (GE)	1	
–342	Coml	—	. SCREW, mach: slot drive; hex head; brass, black oxidized; 1/4 in–20; 3/4 in lg (Att. Pt.) (Amer Screw)	12	
–343	1914	—	. WASHER, lock (Att. Pt.) (Shakeproof)	12	
–344	Coml	—	. SCREW, mach: slot drive; hex head; brass, black oxidized; 1/4 in–20; 5/8 in lg (Att. Pt.) (Amer Screw)	6	
–345	AN936B416B	—	. WASHER, lock: bronze, tinned; round, 1/4 in; shakeproof-type, tw ext teeth (Att. Pt.)	6	

FIG. & INDEX NO.	PART NUMBER	REF SYMBOL	NOMENCLATURE 1 2 3 4 5 6 7	UNITS PER ASSY	APPLI-CATION
			RADAR MODULATOR MD-98/CPS-6B (Cont)		
71-346	AN340-416	—	. NUT, hex: steel, cad pl; 1/4 in-20 (Att. Pt.)	6	
-347	2788	T10101	. TRANSFORMER, pulse (GE)	1	
-348	Coml	—	. SCREW, mach: slot drive; hex head; brass, black oxidized; 5/16 in-18; 3/4 in lg (Att. Pt.) (Amer Screw)	6	
-349	570066	—	. WASHER, lock (Att. Pt.) (Wemco)	6	
-350	AN340-516	—	. NUT, hex: steel, cad pl; 5/16 in-18 (Att. Pt.)	6	
-351	Coml	—	. SCREW, mach: slot drive; hex head; brass, black oxidized; 5/16 in-18; 5/8 in lg (Att. Pt.) (Amer Screw)	2	
-351A	1918	—	. WASHER, lock (Att. Pt.) (Shakeproof)	2	
-352	14F361	Z10106	. NETWORK, pulse forming (GE)	1	
-353	14F361	Z10104	. NETWORK, pulse forming (GE)	1	
-354	14F361	Z10102	. NETWORK, pulse forming (GE)	1	
-355	14F360	Z10101	. NETWORK, pulse forming (GE)	1	
-356	14F360	Z10103	. NETWORK, pulse forming (GE)	1	
-357	14F360	Z10105	. NETWORK, pulse forming (GE)	1	
-358	Coml	—	. SCREW, mach: slot drive; hex head; brass, black oxidized; 5/16 in-18; 5/8 in lg (Att. Pt. for items 352 thru 357) (Amer Screw)	72	
-359	1918	—	. WASHER, lock (Att. Pt. for items 352 thru 357) (Shakeproof)	72	
-360	Coml	—	. SCREW, mach: slot drive; hex head; brass, black oxidized; 3/8 in-16; 3/4 in lg (Att. Pt. or items 352 thru 357) (Amer Screw)	12	
-361	570067	—	. WASHER, lock (Att. Pt. for items 352 thru 357) (Wemco)	12	
-362	AN340-616	—	. NUT, hex: steel, cad pl; 3/8 in-16 (Att. Pt. for items 352 thru 357)	12	
	ML7000071G1	T10105	. TRANSFORMER SUBASSEMBLY, pulse	1	
-363	M2R53P2	—	. . GROMMET	1	
-364	No Number	—	. . TRANSFORMER, pulse (K7000071P2, P3, P4 and P8, assembled)	1	
	ML7000071G1	T10106	. TRANSFORMER SUBASSEMBLY, pulse	1	
-365	M2R53P2	—	. . GROMMET	1	
-366	No Number	—	. . TRANSFORMER, pulse (K7000071P2, P3, P4 and P8, assembled)	1	
	ML7000071G1	T10107	. TRANSFORMER SUBASSEMBLY, pulse	1	
-367	M2R53P2	—	. . GROMMET	1	
-368	No Number	—	. . TRANSFORMER, pulse (K7000071P2, P3, P4 and P8, assembled)	1	
-369	M7480544P7A	—	. POST, spacing	12	
-370	K7000070P2	—	. PLATE, jack	3	
-371	Coml	—	. SCREW, mach: slot drive; RH; steel, cad pl; No. 6-32; 9/16 in lg (Att. Pt. for items 364, 366, 368, 369 and 370) (Amer Screw)	12	
-372	AN936B6B	—	. WASHER, lock: bronze, tinned; round, No. 6; shakeproof-type, tw ext teeth (Att. Pt. for items 364, 366, 368, 369 and 370)	12	
-373	M7480544P7D	—	. POST, spacing	12	
-374	AN515B6-4	—	. SCREW, mach: slot drive; RH; brass, black oxidized; No. 6-32; 1/4 in lg (Att. Pt.)	12	
-375	1906	—	. WASHER, lock (Att. Pt.) (Shakeproof)	12	
-376	UG37A/U	J10105	. CONNECTOR, receptacle	1	
-377	UG37A/U	J10104	. CONNECTOR, receptacle	1	
-378	UG37A/U	J10103	. CONNECTOR, receptacle	1	
-378A	A927-1	—	. CAP AND CHAIN SUBASSEMBLY (Diamond Instr)	3	
-379	AN520B10-8	—	. SCREW, mach: slot drive; RH; brass, black oxidized; No. 10-32; 1/2 in lg (Att. Pt. for items 376 thru 378A)	18	
-380	AN936B10B	—	. WASHER, lock: bronze, tinned; round, No. 10; shakeproof-type, tw ext teeth (Att. Pt. for items 376 thru 378A)	18	
-381	AN345-10	—	. NUT, hex: steel, cad pl; No. 10-32 (Att. Pt. for items 376 thru 378A)	18	
-382	UG290/U	J10115	. CONNECTOR, receptacle	1	
-383	UG290/U	J10116	. CONNECTOR, receptacle	1	
-384	UG290/U	J10117	. CONNECTOR, receptacle	1	
-385	CW-123/U	—	. CAP AND CHAIN SUBASSEMBLY	3	
-386	AN520B3-4	—	. SCREW, mach: slot drive; RH; brass, black oxidized; No. 3-56; 1/4 in lg (Att. Pt. for items 382, 383 and 384)	12	
-387	1203	—	. WASHER, lock (Att. Pt. for items 382, 383 and 384) (Shakeproof)	12	
-388	NP140030D	—	. PLATE, identification	1	
-389	NP140030C	—	. PLATE, identification	1	
-390	NP140030B	—	. PLATE, identification	1	
-391	NP140030G	—	. PLATE, identification	1	
-392	NP140030H	—	. PLATE, identification	1	
-393	NP140030J	—	. PLATE, identification	1	
-394	NP136331C	—	. PLATE, identification	1	
-395	Coml	—	. SCREW, self-tapping: Phillips drive; Bind H; SS; No. 4-40; 3/16 in lg (Att. Pt. for items 388 thru 394) (Shakeproof)	16	
-396	Coml	—	. SCREW, eye: steel, cad pl; 5/8 in-11; 1-3/4 in lg; machine screw thread; straight angle round eye, 2-1/4 in ID (Amer Screw)	2	
-397	1828	—	. WASHER, lock (Shakeproof)	2	
-398	AN335-10	—	. NUT, hex: steel, cad pl; 5/8 in-11	2	
-399	MSX-4-141	—	. BOARD, terminal (Jones HB)	1	
-400	AN515-6-10	—	. SCREW, mach: slot drive; RH; steel, cad pl; No. 6-32; 5/8 in lg (Att. Pt.)	4	
-401	AN936A6B	—	. WASHER, lock: bronze, tinned; round, No. 6; shakeproof-type, tw ext teeth (Att. Pt.)	4	
-402	Coml	—	. STUD: brass, cad pl; 1-1/2 in lg overall, threaded full length w/ 1/4 in-20 thd (Amer Screw)	1	
-403	AN936A416B	—	. WASHER, lock: bronze, tinned; round, 1/4 in; shakeproof-type, tw int teeth	4	
-404	AN340-416	—	. NUT, hex: steel, cad pl; 1/4 in-20	4	
	ML7400821G1	—	. CLEANER, air	1	
-405	2600-6	—	. . FASTENER, spring lock (Camloc)	12	
-406	M7400818P1	—	. . CLOTH, wire	1	
-407	K7000189P1	—	. . GASKET	4	
-408	P1A	—	. CLEANER, air (Air-Maze)	1	
-409	M2R53P3	—	. GROMMET	1	

FIG. & INDEX NO.	PART NUMBER	REF SYMBOL	NOMENCLATURE 1 2 3 4 5 6 7	UNITS PER ASSY	APPLI-CATION
			RADAR MODULATOR MD–98/CPS–6B (Cont)		
71–410	ST22N	S10112	. SWITCH, toggle	1	
–411	K7006297P1	—	. GUSSET	1	
–412	K7005736P1	—	. GUSSET	1	
–413	K7005735P1	—	. GUSSET	1	
–414	K7005735P2	—	. GUSSET	1	
–415	AN515B416R7	—	. SCREW, mach: Phillips drive; RH; brass, black oxidized; 1/4 in–20; 7/16 in lg (Att. Pt. for items 413 and 414)	4	
–416	AN515–416R7	—	. SCREW, mach: Phillips drive; RH; steel, cad pl; 1/4 in–20; 7/16 in lg (Att. Pt. for items 411 thru 414)	16	
–417	AN936B416B	—	. WASHER, lock: bronze, tinned; round, 1/4 in; shakeproof-type, tw ext teeth (Att. Pt. for items 411 thru 414)	20	
–418	AN340–416	—	. NUT, hex: steel, cad pl; 1/4 in–20 (Att. Pt. for items 411 thru 414)	20	
–419	ML7772505G1	—	. SUPPORT, mounting base	1	
–420	ML7772503G1	—	. SUPPORT, mounting base	1	
–421	AN515–416–8	—	. SCREW, mach: slot drive; RH; steel, cad pl; 1/4 in–20; 1/2 in lg (Att. Pt. for items 419 and 420)	4	
–422	AN936B416B	—	. WASHER, lock: bronze, tinned; round, 1/4 in; shakeproof-type, tw ext teeth (Att. Pt. for items 419 and 420)	4	
–423	AN340–416	—	. NUT, hex: steel, cad pl; 1/4 in–20 (Att. Pt. for items 419 and 420)	4	
–424	K7000073P1	—	. STUD	2	
–425	1914	—	. WASHER, lock (Att. Pt.) (Shakeproof)	6	
–426	Coml	—	. NUT, hex: brass, black oxidized; 1/4 in–20 (Att. Pt.) (Amer Screw)	6	
–427	UG37A/U	J10101	. CONNECTOR, receptacle	1	
–428	UG37A/U	J10102	. CONNECTOR, receptacle	1	
–429	A927–1	—	. CAP AND CHAIN SUBASSEMBLY (Diamond Instr)	2	
–430	AN520B10–8	—	. SCREW, mach: slot drive; RH; brass, black oxidized; No. 10–32; 1/2 in lg (Att. Pt. for items 427, 428 and 429)	12	
–431	AN936B10B	—	. WASHER, lock: bronze, tinned; round, No. 10; shakeproof-type, tw ext teeth (Att. Pt. for items 427, 428 and 429)	12	
–432	AN345–10	—	. NUT, hex: steel, cad pl; No. 10–32 (Att. Pt. for items 427, 428 and 429)	12	
–433	UG414/U	J10106	. CONNECTOR, receptacle	1	
–434	CW–123/U	—	. CAP AND CHAIN SUBASSEMBLY	1	
–435	AN520B3–5	—	. SCREW, mach: slot drive; RH; brass, black oxidized; No. 3–56; 5/16 in lg (Att. Pt. for items 433 and 434)	4	
–436	1203	—	. WASHER, lock (Att. Pt. for items 433 and 434) (Shakeproof)	4	
	ML7400858G3	W10109	. CABLE ASSEMBLY, RF	1	
–437	RG59/U	—	. . CABLE, RF: 14-3/4 in lg	1	
–438	UG260/U	P10106C	. . CONNECTOR, plug	1	
–439	UG262/U	J10118	. . CONNECTOR, receptacle	1	
–440	NP125775J	—	. . MARKER, cable	1	
–441	NP125767T	—	. . MARKER, cable	1	
–442	CW–123/U	—	. CAP AND CHAIN SUBASSEMBLY	1	
–443	AN520B3–5	—	. SCREW, mach: slot drive; RH; brass, black oxidized; No. 3–56; 5/16 in lg (Att. Pt. for items 439 and 442)	4	
–444	1203	—	. WASHER, lock (Att. Pt. for items 439 and 442) (Shakeproof)	4	
–445	NP140030F	—	. PLATE, identification	1	
–446	NP140030K	—	. PLATE, identification	1	
–447	NP140030E	—	. PLATE, identification	1	
–448	NP140030A	—	. PLATE, identification	1	
–449	NP140029U	—	. PLATE, identification	1	
–450	Coml	—	. SCREW, self-tapping: Phillips drive; Bind H; SS; No. 4–40; 3/16 in lg (Att. Pt. for items 445 thru 449) (Shakeproof)	10	
–451	M7400802P1	—	. PLATE, cover	1	
–452	AN515B8–5	—	. SCREW, mach: slot drive; RH; brass, black oxidized; No. 8–32; 5/16 in lg (Att. Pt.)	18	
–453	1908	—	. WASHER, lock (Att. Pt.) (Shakeproof)	18	
–454	JX65A	Z10113	. SUPPRESSOR, electrical noise (Sprague)	1	
–455	JX65A	Z10112	. SUPPRESSOR, electrical noise (Sprague)	1	
–456	JX65A	Z10111	. SUPPRESSOR, electrical noise (Sprague)	1	
–457	JX65A	Z10110	. SUPPRESSOR, electrical noise (Sprague)	1	
–458	JX65A	Z10109	. SUPPRESSOR, electrical noise (Sprague)	1	
–459	JX65A	Z10108	. SUPPRESSOR, electrical noise (Sprague)	1	
–460	JX65A	Z10107	. SUPPRESSOR, electrical noise (Sprague)	1	
–461	C1128	J10112	. CONNECTOR, receptacle (Buggie)	1	
			CABINET		
72–	ML7300316G2	—	. CABINET (See Figure 71–1 for next higher assembly)	Ref	
–1	No Number	—	. . BASE (W7300316P20, P21, P23, P24, P25, P26 and P28, assembled)	1	
–2	No Number	—	. . FRAME (W7300316P6, P8, P10, P12, P15 thru P18, P30, P34 thru P38, P40, P41, P44, P46, P78 thru P82 and P100, assembled)	1	
–3	Coml	—	. . BOLT, mach: hex head; steel, cad pl; 3/8 in–16; 5/8 in lg (Att. Pt.) (Amer Screw)	18	
–4	AN936B616	—	. . WASHER, lock: steel, cad pl; round, 3/8 in; shakeproof-type, tw ext teeth (Att. Pt.)	18	
–5	AN340–616	—	. . NUT, hex: steel, cad pl; 3/8 in–16 (Att. Pt.)	18	
–6	58–212BE	—	. . HINGE (Natl Lock)	1	
–7	AN505–6–6	—	. . SCREW, mach: slot drive; FH; steel, cad pl; No. 6–32; 3/8 in lg (Att. Pt.)	13	
–8	AN936B6	—	. . WASHER, lock: steel, cad pl; round, No. 6; shakeproof-type, tw ext teeth (Att. Pt.)	13	

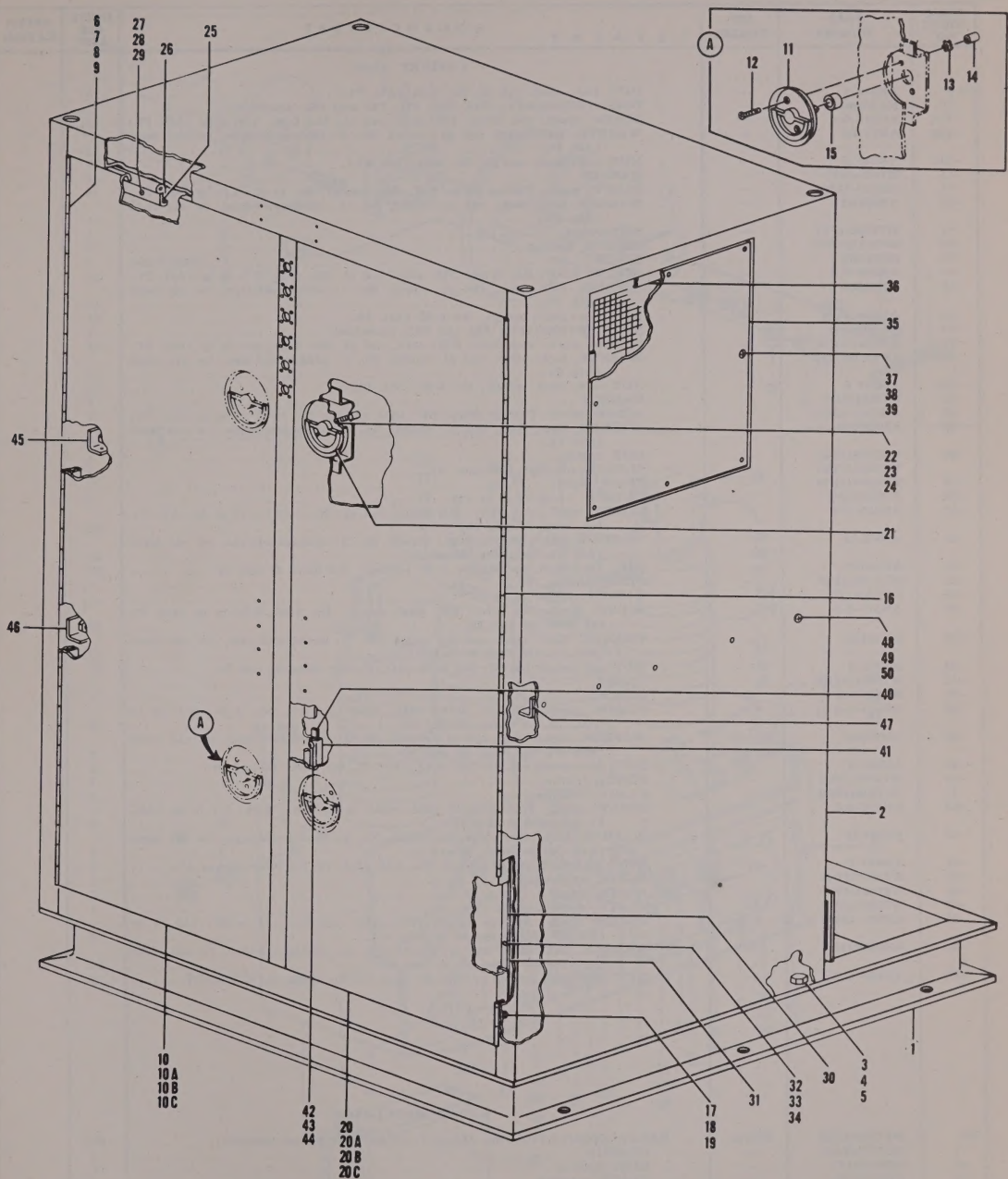

Figure 72. Cabinet

FIG. & INDEX NO.	PART NUMBER	REF SYMBOL	NOMENCLATURE 1 2 3 4 5 6 7	UNITS PER ASSY	APPLI-CATION
			CABINET (Cont)		
72–9	AN340–6	—	. . NUT, hex: steel, cad pl; No. 6–32 (Att. Pt.)	13	
–10	No Number	—	. . DOOR (W7300316P14, P19, P29, P31, P33 and P52, assembled)	1	
–10A	AN505–6–6	—	. . SCREW, mach: slot drive; FH; steel, cad pl; No. 6–32; 3/8 in lg (Att. Pt.)	13	
–10B	AN936B6	—	. . WASHER, lock: steel, cad pl; round, No. 6; shakeproof-type, tw ext teeth (Att. Pt.)	13	
–10C	AN340–6	—	. . NUT, hex: steel, cad pl; No. 6–32 (Att. Pt.)	13	
–11	M7483488P1	—	. . HANDLE	2	
–12	AN510–10R16	—	. . SCREW, mach: Phillips drive; FH; steel, cad pl; No. 10–32; 1 in lg (Att. Pt.)	4	
–13	AN936B10	—	. . WASHER, lock: steel, cad pl; round, No. 10; shakeproof-type, tw ext teeth (Att. Pt.)	4	
–14	W7300316P68	—	. . NUT, round	4	
–15	W7300316P65	—	. . SLEEVE, spacing	2	
–16	58–212BE	—	. . HINGE (Natl Lock)	1	
–17	AN505–6–6	—	. . SCREW, mach: slot drive; FH; steel, cad pl; No. 6–32; 3/8 in lg (Att. Pt.)	13	
–18	AN936B6	—	. . WASHER, lock: steel, cad pl; round, No. 6; shakeproof-type, tw ext teeth (Att. Pt.)	13	
–19	AN340–6	—	. . NUT, hex: steel, cad pl; No. 6–32 (Att. Pt.)	13	
–20	No Number	—	. . DOOR (W7300316P13, P31 and P32, assembled)	1	
–20A	AN505–6–6	—	. . SCREW, mach: slot drive; FH; steel, cad pl; No. 6–32; 3/8 in lg (Att. Pt.)	13	
–20B	AN936B6	—	. . WASHER, lock: steel, cad pl; round, No. 6; shakeproof-type, tw ext teeth (Att. Pt.)	13	
–20C	AN340–6	—	. . NUT, hex: steel, cad pl; No. 6–32 (Att. Pt.)	13	
–21	M7483488P1	—	. . HANDLE	2	
–22	AN510–10R16	—	. . SCREW, mach: Phillips drive; FH; steel, cad pl; No. 10–32; 1 in lg (Att. Pt.)	4	
–23	AN936B10	—	. . WASHER, lock: steel, cad pl; round, No. 10; shakeproof-type, tw ext teeth (Att. Pt.)	4	
–24	W7300316P68	—	. . NUT, round	4	
	W7300316P65	—	. . SLEEVE, spacing (Ref item 15)	2	
–25	W7300316P70	—	. . STRIP, batten	4	
–26	K7002962P2	—	. . GASKET: 14-29/32 in lg	4	
–27	AN515–2–5	—	. . SCREW, mach: slot drive; RH; steel, cad pl; No. 2–56; 5/16 in lg (Att. Pt. for items 25 and 26)	20	
–28	AN936A2	—	. . WASHER, lock: steel, cad pl; round, No. 2; shakeproof-type, tw int teeth (Att. Pt. for items 25 and 26)	20	
–29	AN340–2	—	. . NUT, hex: steel, cad pl; No. 2–56 (Att. Pt. for items 25 and 26)	20	
–30	W7300316P69	—	. . STRIP, batten	4	
–31	K7002962P2	—	. . GASKET: 36-3/4 in lg	4	
–32	AN515–2–5	—	. . SCREW, mach: slot drive; RH; steel, cad pl; No. 2–56; 5/16 in lg (Att. Pt. for items 30 and 31)	40	
–33	AN936A2	—	. . WASHER, lock: steel, cad pl; round, No. 2; shakeproof-type, tw int teeth (Att. Pt. for items 30 and 31)	40	
–34	AN340–2	—	. . NUT, hex: steel, cad pl; No. 2–56 (Att. Pt. for items 30 and 31)	40	
–35	W7300316P53	—	. . COVER	1	
–36	W7300316P66	—	. . GASKET	1	
–37	AN515–4–6	—	. . SCREW, mach: Phillips drive; RH; steel, cad pl; No. 4–40; 3/8 in lg (Att. Pt. for items 35 and 36)	8	
–38	AN936B4	—	. . WASHER, lock: steel, cad pl; round, No. 4; shakeproof-type, tw ext teeth (Att. Pt. for items 35 and 36)	8	
–39	AN340–4	—	. . NUT, hex: steel, cad pl; No. 4–40 (Att. Pt. for items 35 and 36)	8	
–40	W7300316P42	—	. . PLATE, friction	4	
–41	W7300316P69	—	. . PLATE, retainer	4	
–42	AN515–2–6	—	. . SCREW, mach: Phillips drive; RH; steel, cad pl; No. 2–56; 3/8 in lg (Att. Pt. for items 40 and 41)	8	
–43	AN936A2	—	. . WASHER, lock: steel, cad pl; round, No. 2; shakeproof-type, tw int teeth (Att. Pt. for items 40 and 41)	8	
–44	AN340–2	—	. . NUT, hex: steel, cad pl; round, No. 2–56 (Att. Pt. for items 40 and 41)	8	
–45	W7300316P49	—	. . PLATE, angle	1	
–46	W7300316P50	—	. . PLATE, angle	1	
–47	W7300316P51	—	. . PLATE, angle	1	
–48	AN520–416–8	—	. . SCREW, mach: Phillips drive; RH; steel, cad pl; 1/4 in–20; 1/2 in lg (Att. Pt. for items 45, 46 and 47)	13	
–49	AN936B416	—	. . WASHER, lock: steel, cad pl; round, 1/4 in; shakeproof-type, tw ext teeth (Att. Pt. for items 45, 46 and 47)	13	
–50	AN340–416	—	. . NUT, hex: steel, cad pl; 1/4 in–20 (Att. Pt. for items 45, 46 and 47)	13	
			RADAR MODULATOR		
73–	ML7354001G2	S10101	. RADAR MODULATOR (See Figure 71–68 for next higher assembly)	Ref	
–1	ML7771494G1	—	. . CHASSIS	1	
–2	M7482851P1	—	. . DISK, Geneva	1	
–3	K7002234P1	—	. . PLATE, retainer	1	
–4	K7004039	—	. . SPRING	1	
–5	AN515–6–4	—	. . SCREW, mach: slot drive; RH; steel, cad pl; No. 6–32; 1/4 in lg (Att. Pt. for item 3)	1	
–6	AN936A6	—	. . WASHER, lock: steel, cad pl; round, No. 6; shakeproof-type, tw int teeth (Att. Pt. for item 3)	1	
–7	K7002252P2	—	. . SCREW, mach (Att. Pt. for items 3 and 4)	1	

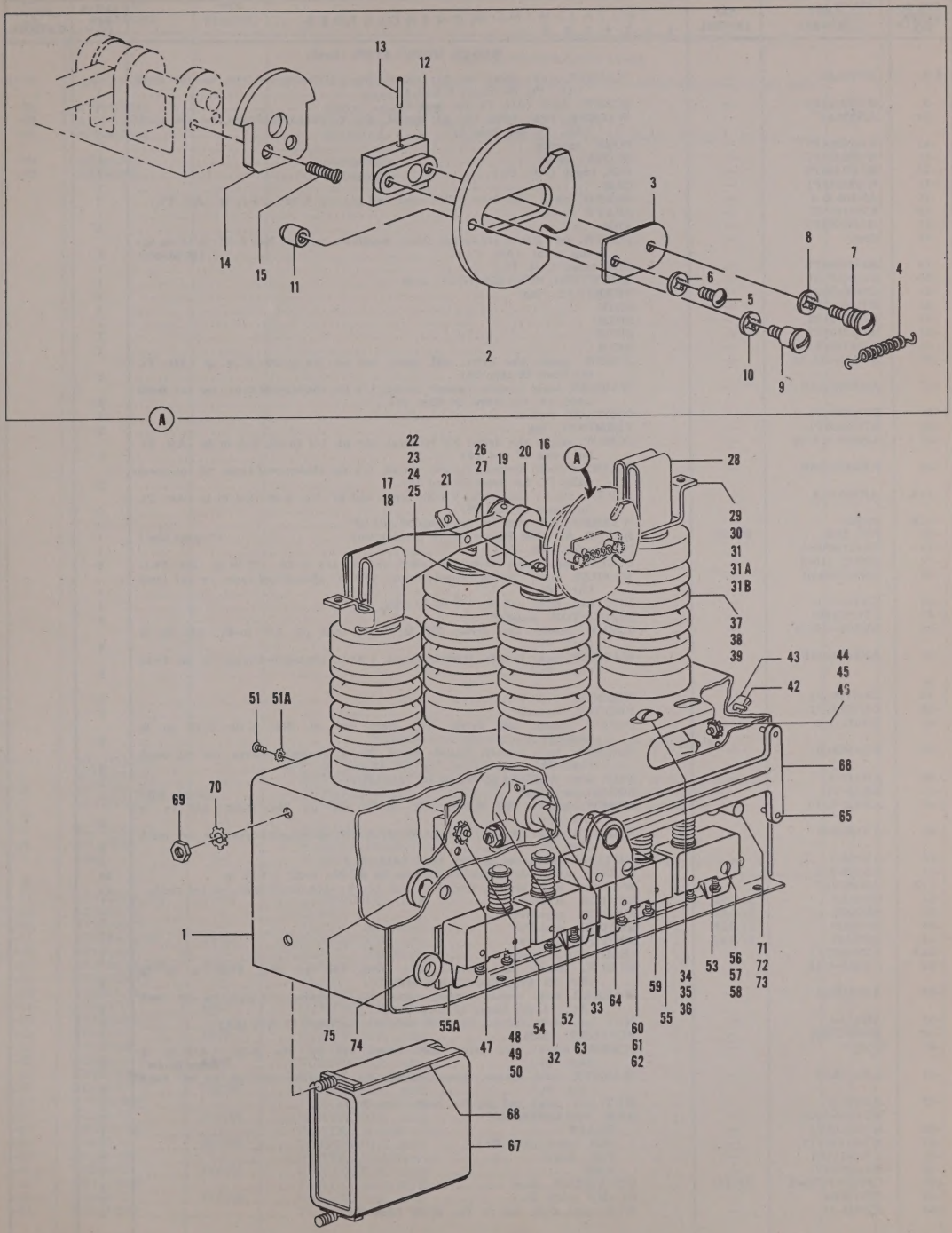

Figure 73. Radar Modulator

FIG. & INDEX NO.	PART NUMBER	REF SYMBOL	NOMENCLATURE 1 2 3 4 5 6 7	UNITS PER ASSY	APPLI-CATION
			RADAR MODULATOR (Cont)		
73–8	AN936A6	—	. . WASHER, lock: steel, cad pl; round, No. 6; shakeproof-type, tw int teeth (Att. Pt. for items 3 and 4)	1	
–9	K7002255P1	—	. . SCREW, mach (Att. Pt. for item 4)	1	
–10	AN936A6	—	. . WASHER, lock: steel, cad pl; round, No. 6; shakeproof-type, tw int teeth (Att. Pt. for item 4)	1	
–11	K7002254P1	—	. . POST, spacing	1	
–12	K7002239P1	—	. . BLOCK, guide	1	
–13	M7461888P6	—	. . PIN, taper (Att. Pt.)	1	
–14	K7002238P1	—	. . CAM	1	
–15	AN505–6–4	—	. . SCREW, mach: slot drive; FH; steel, cad pl; No. 6–32; 1/4 in lg (Att. Pt.)	2	
–16	K7001555P1	—	. . SHAFT	1	
–17	M7403903P1	—	. . ARM	1	
–18	Coml	—	. . SCREW, set: Bristo six-spline drive; headless; copper; No. 6–32; 3/16 in lg; cup point (Att. Pt.) (Bristolco)	1	
–19	M7461888P6	—	. . PIN, taper (Att. Pt.)	1	
–20	K7000157G1	—	. . MOUNTING SUBASSEMBLY, arm	1	
–21	K7000158P1	—	. . TERMINAL, lug	1	
–22	K7128791P1	—	. . SHIM	1	
–23	K7128791P2	—	. . SHIM	1	
–24	K7128791P3	—	. . SHIM	1	
–25	K7128791P4	—	. . SHIM	1	
–26	AN515–416–16	—	. . SCREW, mach: slot drive; RH; steel, cad pl; 1/4 in–20; 1 in lg (Att. Pt. for items 20 thru 25)	2	
–27	AN936B416B	—	. . WASHER, lock: bronze, tinned; round, 1/4 in; shakeproof-type, tw ext teeth (Att. Pt. for items 20 thru 25)	2	
–28	K7002237P1	—	. . CONTACT, switch	2	
–29	K7002235P1	—	. . TERMINAL, lug	2	
–30	AN500–416–12	—	. . SCREW, mach: slot drive; Fil H; steel, cad pl; 1/4 in–20; 3/4 in lg (Att. Pt. for items 28 and 29)	2	
–31	AN936A416B	—	. . WASHER, lock: bronze, tinned; round, 1/4 in; shakeproof-type, tw int teeth (Att. Pt. for items 28 and 29)	2	
–31A	AN500–4–4	—	. . SCREW, mach: slot drive; Fil H; brass, cad pl; No. 4–40; 1/4 in lg (Att. Pt. for items 28 and 29)	2	
–31B	625527	—	. . WASHER, lock (Att. Pt. for items 28 and 29)	2	
–32	NC1–12R	B10101	. . MOTOR, AC (See Figure 70 for breakdown) (Bodine Elec)	1	
–33	M7461888P16	—	. . PIN, taper (Att. Pt.)	1	
–34	AN515–416–8	—	. . SCREW, mach: slot drive; RH; steel, cad pl; 1/4 in–20; 1/2 in lg (Att. Pt.)	4	
–35	AN936B416B	—	. . WASHER, lock: bronze, tinned; round, 1/4 in; shakeproof-type, tw ext teeth (Att. Pt.)	4	
–36	AN340–416	—	. . NUT, hex: steel, cad pl; 1/4 in–20 (Att. Pt.)	4	
–37	K7128740P1	—	. . INSULATOR, standoff	4	
–38	AN500–416–12	—	. . SCREW, mach: slot drive; Fil H; brass, cad pl; 1/4 in–20; 3/4 in lg (Att. Pt.)	4	
–39	AN936A416B	—	. . WASHER, lock: bronze, tinned; round, 1/4 in; shakeproof-type, tw int teeth (Att. Pt.)	4	
✦					
–42	K7871267P1	—	. . WRENCH	1	
–43	K7126174P1	—	. . HOLDER, wrench	1	
–44	AN515–4–5	—	. . SCREW, mach: slot drive; RH; steel, cad pl; No. 4–40; 5/16 in lg (Att. Pt.)	2	
–45	AN936B4B	—	. . WASHER, lock: bronze, tinned; round, No. 4; shakeproof-type, tw ext teeth (Att. Pt.)	2	
–46	AN340–4	—	. . NUT, hex: steel, cad pl; No. 4–40 (Att. Pt.)	2	
–47	MSX8–141	—	. . BOARD, terminal (Jones HB)	1	
–48	AN515–8–10	—	. . SCREW, mach: slot drive; RH; steel, cad pl; No. 8–32; 5/8 in lg (Att. Pt.)	4	
–49	AN936B8B	—	. . WASHER, lock: bronze, tinned; round, No. 8; shakeproof-type, tw ext teeth (Att. Pt.)	4	
–50	AN340–8	—	. . NUT, hex: steel, cad pl; No. 8–32 (Att. Pt.)	4	
–51	AN508–6–4	—	. . SCREW, mach: slot drive; RH; brass, tin pl; No. 6–32; 1/4 in lg	16	
–51A	AN936B6B	—	. . WASHER, lock: bronze, tinned; round, No. 6; shakeproof-type, tw ext teeth	16	
–52	SS03B20	S10105	. . SWITCH, sensitive	1	
–53	SS03B20	S10104	. . SWITCH, sensitive	1	
–54	SS03B20	S10103	. . SWITCH, sensitive	1	
–55	SS03B20	S10102	. . SWITCH, sensitive	1	
–55A	K7004627P1	—	. . INSULATOR, plate	1	
–56	AN515–4–16	—	. . SCREW, mach: slot drive; RH; steel, cad pl; No. 4–40; 1 in lg (Att. Pt. for items 52 thru 55A)	8	
–57	AN936B4B	—	. . WASHER, lock: bronze, tinned; round, No. 4; shakeproof-type, tw ext teeth (Att. Pt. for items 52 thru 55A)	8	
–58	AN340–4	—	. . NUT, hex: steel, cad pl; No. 4–40 (Att. Pt. for items 52 thru 55A)	8	
–59	K7000179G1	—	. . SUPPORT, shaft	1	
–60	Coml	—	. . SCREW, mach: slot drive; RH; brass, cad pl; No. 8–32; 1-3/8 in lg (Att. Pt.) (Amer Screw)	2	
–61	AN936B8B	—	. . WASHER, lock: bronze, tinned; round, No. 8; shakeproof-type, tw ext teeth (Att. Pt.)	2	
–62	AN340–8	—	. . NUT, hex: steel, cad pl; No. 8–32 (Att. Pt.)	2	
	ML7400830G1	—	. . ARM SUBASSEMBLY	1	
–63	K7000105P1	—	. . . SHAFT	1	
–64	M7461888P19	—	. . . PIN, taper (Att. Pt.)	1	
–65	K7000116P1	—	. . . PIN, dowel	2	
–66	M7482850P1	—	. . . ARM	1	
–67	CP70B1FF405K	C10101	. . CAPACITOR, fixed	1	
–68	CPO7SB3	—	. . CLAMP (Att. Pt.)	2	
–69	AN345–10	—	. . NUT, hex: steel, cad pl; No. 10–32 (Att. Pt.)	2	

FIG. & INDEX NO.	PART NUMBER	REF SYMBOL	NOMENCLATURE 1 2 3 4 5 6 7	UNITS PER ASSY	APPLI-CATION
			RADAR MODULATOR (Cont)		
73–70	AN936B10B	—	. . WASHER, lock: bronze, tinned; round, No. 10; shakeproof-type, tw ext teeth (Att. Pt.)	2	
–71	K7000115P1	—	. . STOP, range limit	2	
–72	AN345–10	—	. . NUT, hex: steel, cad pl; No. 10–32 (Att. Pt.)	2	
–73	AN936B10B	—	. . WASHER, lock: bronze, tinned; round, No. 10; shakeproof-type, tw ext teeth (Att. Pt.)	2	
–74	M2R53P13	—	. . GROMMET	2	
–75	M2R53P14	—	. . GROMMET	1	
			POWER DISTRIBUTION ASSEMBLY OA–103/CPS–6B		
74–	ML7771856G1	—	POWER DISTRIBUTION ASSEMBLY OA–103/CPS–6B	1	
–1	ML7352788G1	—	. MODULATOR CONTROL C–561/CPS-6B (See Figure 75 for breakdown)	1	
–2	ML7352545G1	—	. POWER SUPPLY PP–422/CPS–6B (See Figure 77 for breakdown)	1	
–3	ML7353922G1	—	. POWER PANEL SB–88/CPS–6B (See Figure 79 for breakdown)	1	
✦ –5	ML7352791G1	—	. CABINET (See Figure 81 for breakdown)	1	
–6	NP140159	—	. PLATE, identification	1	
–7	Coml	—	. SCREW, self-tapping: Phillips drive; Bind H; SS, black oxidized; No. 4–40; 3/16 in lg (Att. Pt.) (Shakeproof)	4	
✦ –11	AN3108–22–33S	P4601	. CONNECTOR, plug	1	
–12	AN3057–12	—	. CLAMP	1	
–13	NP137428D	—	. PLATE, identification	1	
–14	AN3108–28–2S	P10201	. CONNECTOR, plug	1	
–15	NP137428Z	—	. PLATE, identification	1	
–16	AN3108–28–16S	P10203	. CONNECTOR, plug	1	
–17	NP137428A1	—	. PLATE, identification	1	
–18	AN3057–16	—	. CLAMP	2	
–19	UG260/U	P201	. CONNECTOR, plug	1	
–20	NP137409K	—	. PLATE, identification	1	
–21	UG260/U	P202	. CONNECTOR, plug	1	
–22	NP137409L	—	. PLATE, identification	1	
–23	UG260/U	P203	. CONNECTOR, plug	1	
–24	NP137409M	—	. PLATE, identification	1	
–25	UG260/U	P10701	. CONNECTOR, plug	1	
–26	NP137409E	—	. PLATE, identification	1	
–27	UG260/U	P10702	. CONNECTOR, plug	1	
–28	NP137409F	—	. PLATE, identification	1	
–29	UG260/U	P10703	. CONNECTOR, plug	1	
–30	NP137409G	—	. PLATE, identification	1	
–31	UG260/U	P10704	. CONNECTOR, plug	1	
–32	NP137409H	—	. PLATE, identification	1	
–33	UG260/U	P10705	. CONNECTOR, plug	1	
–34	NP137409J	—	. PLATE, identification	1	

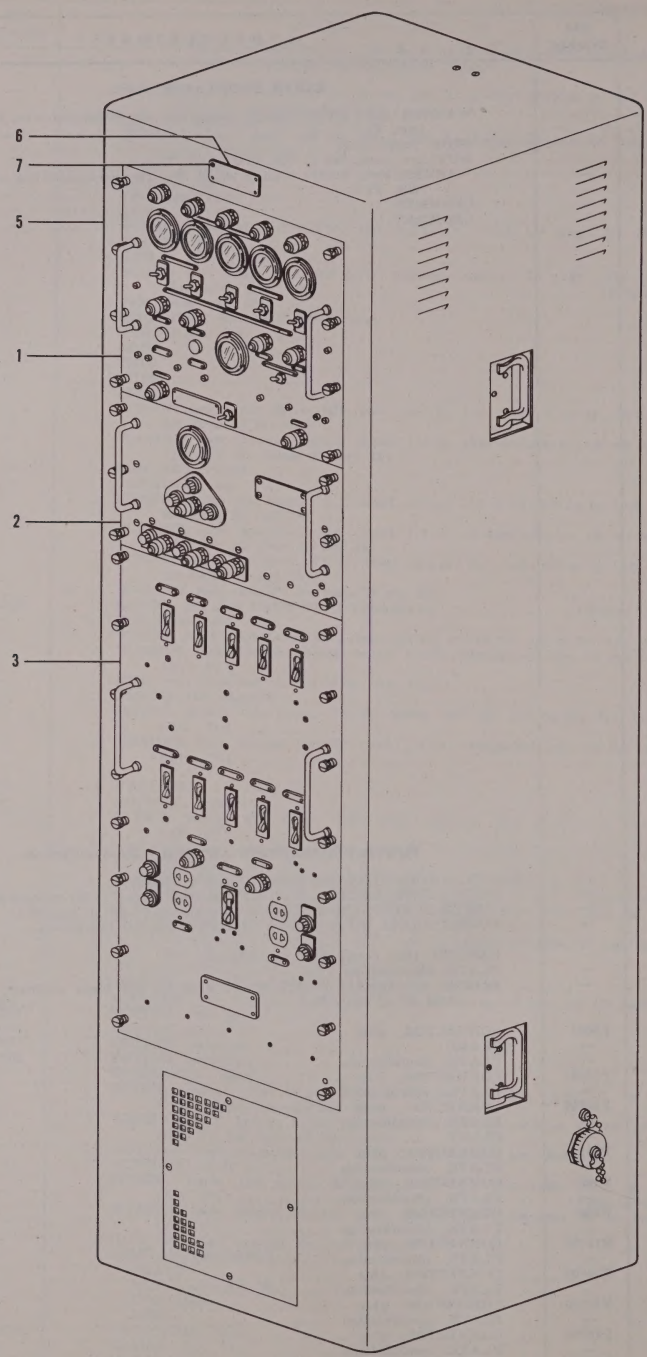

Figure 74. Power Distribution Assembly OA–103/6B, Front View (Sheet 1 of 2 sheets, Index Nos. 1 thru 7)

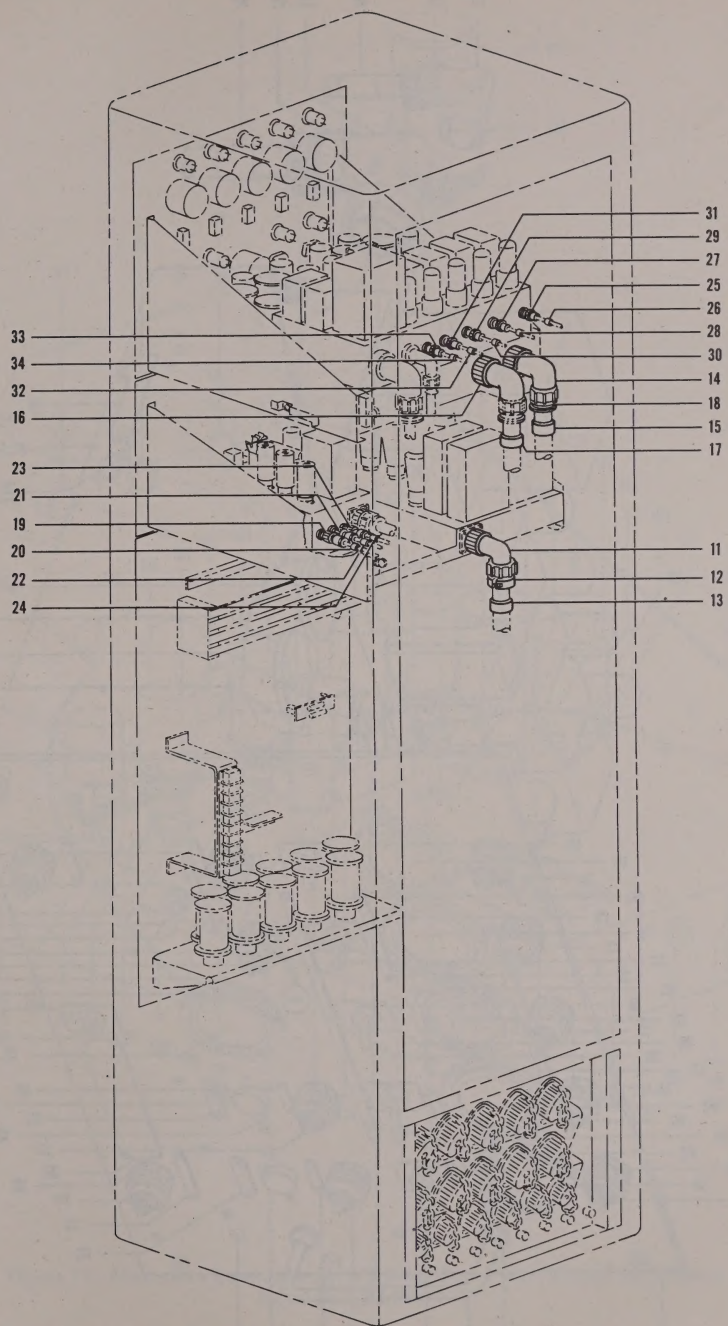

Figure 74. Power Distributing Assembly OA–103/CPS–6B, Rear View (Sheet 2 of 2 sheets, Index Nos. 11 thru 34)

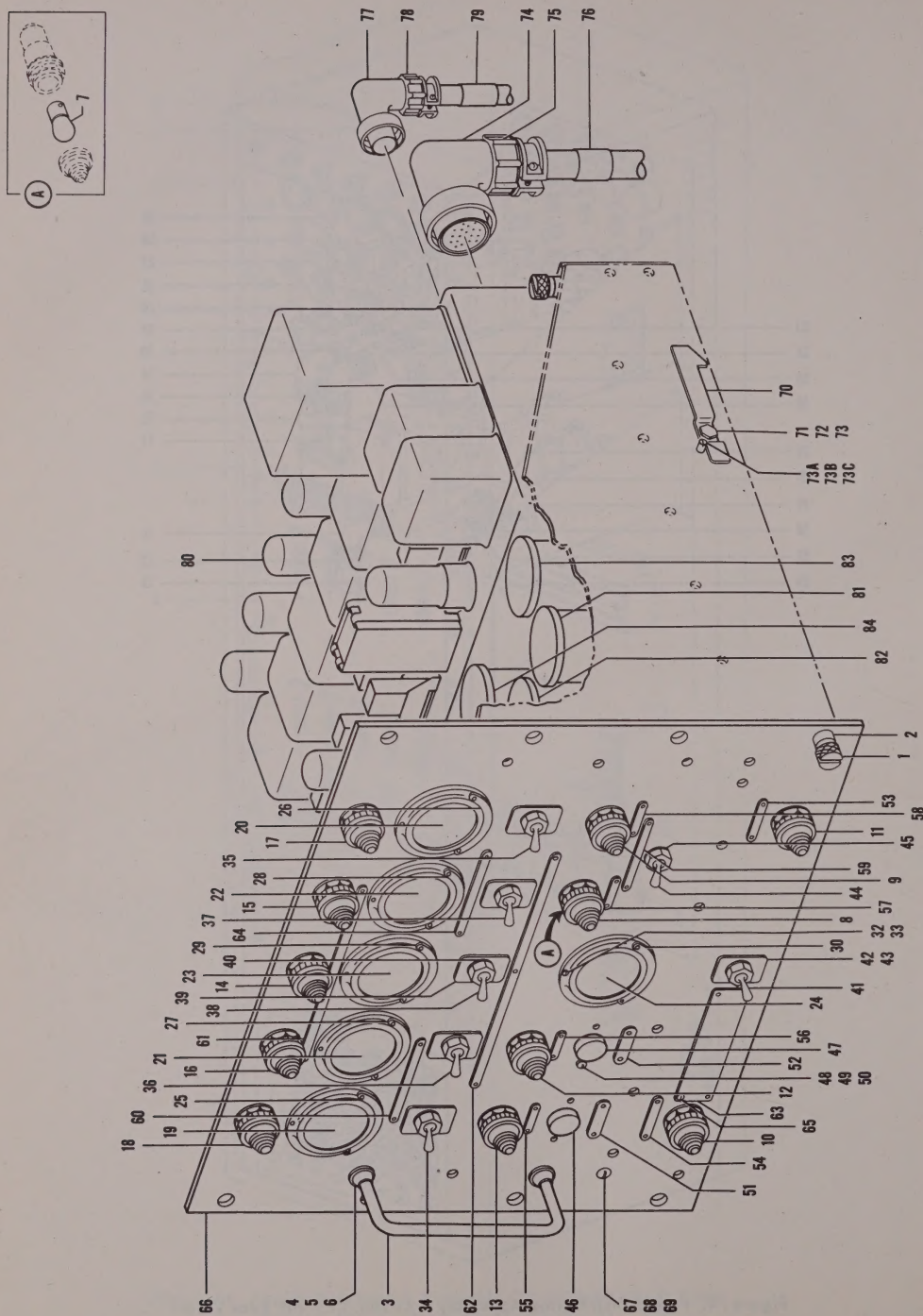

Figure 75. Modulator Control C–561/CPS–6B, Front View (Sheet 1 of 2 sheets, Index Nos. 1 thru 84)

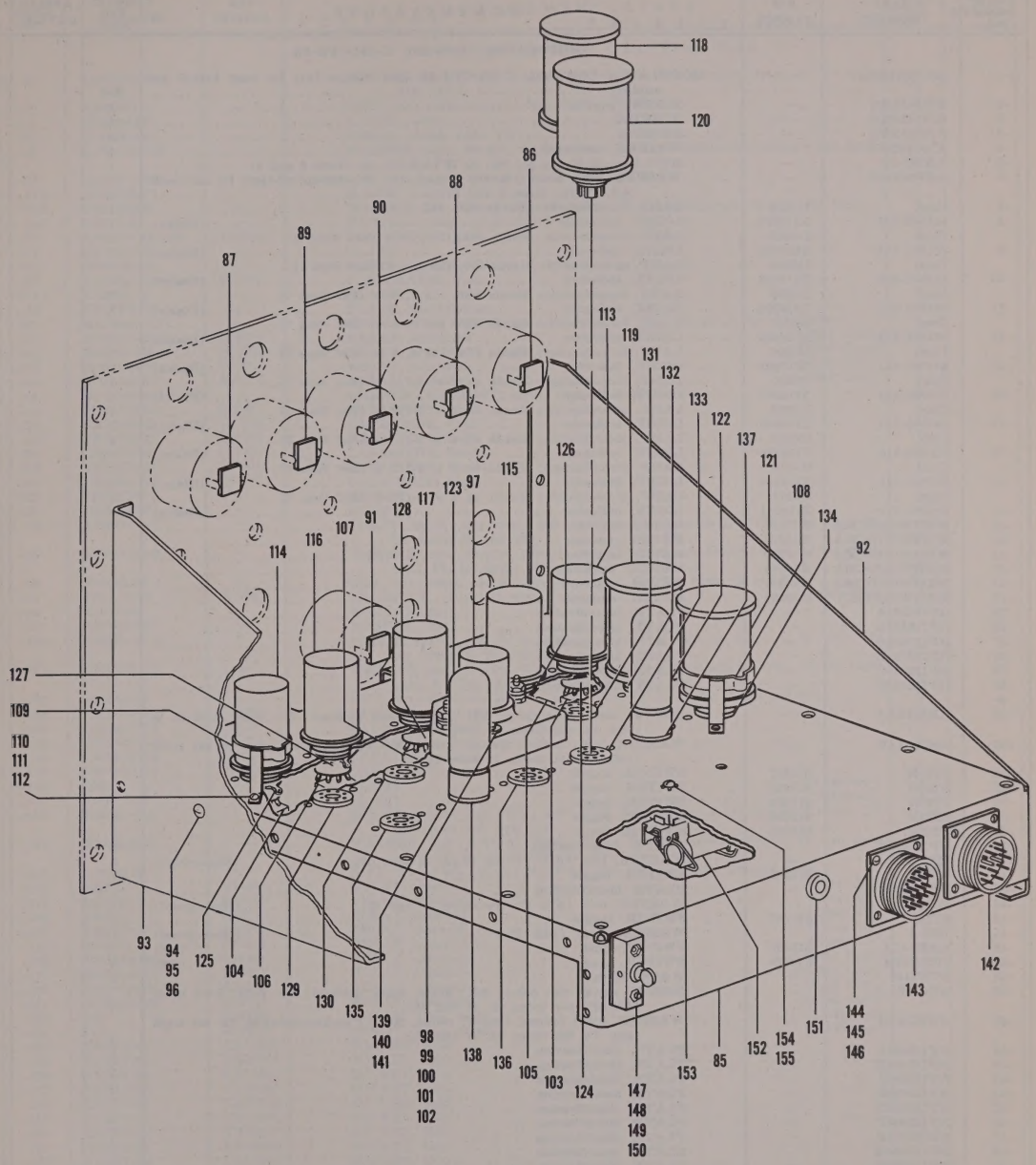

Figure 75. Modulator Control C–561/CPS–6B, Rear View (Sheet 2 of 2 sheets, Index Nos. 85 thru 155)

FIG. & INDEX NO.	PART NUMBER	REF SYMBOL	NOMENCLATURE 1 2 3 4 5 6 7	UNITS PER ASSY	APPLI-CATION
			MODULATOR CONTROL C–561/CPS–6B		
75–	ML7352788G1	—	. MODULATOR CONTROL C–561/CPS–6B (See Figure 74–1 for next higher assembly)	Ref	
–1	K7126123P1	—	. . SCREW, captive	8	
–2	K7128235P2	—	. . BUSHING	8	
–3	K7002870P1	—	. . HANDLE	2	
–4	K7002869P1	—	. . WASHER, extruded	4	
–5	AN345–10	—	. . NUT, hex: steel, cad pl; No. 10–32 (Att. Pt. for items 3 and 4)	4	
–6	AN936B10B	—	. . WASHER, lock: bronze, tinned; round, No. 10; shakeproof-type, tw ext teeth (Att. Pt. for items 3 and 4)	4	
–7	Coml	I10201	. . LAMP, incandescent: Mazda 6S6, 115 v, 6 w	1	
–8	801002–535	XI10201	. . LIGHT, indicator (Dialco)	1	
	Coml	I10202	. . LAMP, incandescent: Mazda 6S6, 115 v, 6 w (Ref item 7)	1	
–9	801002–514	XI10202	. . LIGHT, indicator (Dialco)	1	
	Coml	I10203	. . LAMP, incandescent: Mazda 6S6, 115 v, 6 w (Ref item 7)	1	
–10	801002–512	XI10203	. . LIGHT, indicator (Dialco)	1	
	Coml	I10204	. . LAMP, incandescent: Mazda 6S6, 115 v, 6 w (Ref item 7)	1	
–11	801002–512	XI10204	. . LIGHT, indicator (Dialco)	1	
	Coml	I10205	. . LAMP, incandescent: Mazda 6S6, 115 v, 6 w (Ref item 7)	1	
–12	801002–513	XI10205	. . LIGHT, indicator (Dialco)	1	
	Coml	I10206	. . LAMP, incandescent: Mazda 6S6, 115 v, 6 w (Ref item 7)	1	
–13	801002–511	XI10206	. . LIGHT, indicator (Dialco)	1	
	Coml	I10207	. . LAMP, incandescent: Mazda 44, 6 v, 1-1/2 w (Ref item 7)	1	
–14	801006–514	XI10207	. . LIGHT, indicator (Dialco)	1	
	Coml	I10208	. . LAMP, incandescent: Mazda 44, 6 v, 1-1/2 w (Ref item 7)	1	
–15	801006–514	XI10208	. . LIGHT, indicator (Dialco)	1	
	Coml	I10209	. . LAMP, incandescent: Mazda 44, 6 v, 1-1/2 w (Ref item 7)	1	
–16	801006–514	XI10209	. . LIGHT, indicator (Dialco)	1	
	Coml	I10210	. . LAMP, incandescent: Mazda 44, 6 v, 1-1/2 w (Ref item 7)	1	
–17	801006–514	XI10210	. . LIGHT, indicator (Dialco)	1	
	Coml	I10211	. . LAMP, incandescent: Mazda 44, 6 v, 1-1/2 w (Ref item 7)	1	
–18	801006–514	XI10211	. . LIGHT, indicator (Dialco)	1	
–19	MR26W050DCMA	M10201	. . METER ammeter	1	
–20	MR26W050DCMA	M10202	. . METER ammeter	1	
–21	MR26W050DCMA	M10203	. . METER ammeter	1	
–22	MR26W050DCMA	M10204	. . METER, ammeter	1	
–23	MR26W050DCMA	M10205	. . METER, ammeter	1	
–24	MR26W020DCKV	M10206	. . METER, ammeter	1	
–25	NP125539A	—	. . PLATE, identification	1	
–26	NP125539E	—	. . PLATE, identification	1	
–27	NP125539B	—	. . PLATE, identification	1	
–28	NP125539D	—	. . PLATE, identification	1	
–29	NP125539C	—	. . PLATE, identification	1	
–30	NP125539F	—	. . PLATE, identification	1	
✦					
–32	AN515B4–7	—	. . SCREW, mach: slot drive; RH; brass, black oxidized; No. 4–40; 7/16 in lg (Att. Pt. for items 19 thru 30)	18	
–33	AN936A4B	—	. . WASHER, lock: bronze, tinned; round, No. 4; shakeproof-type, tw int teeth (Att. Pt. for items 19 thru 24)	6	
–34	ST22N	S10201	. . SWITCH, toggle	1	
–35	ST22N	S10202	. . SWITCH, toggle	1	
–36	ST22N	S10203	. . SWITCH, toggle	1	
–37	ST22N	S10204	. . SWITCH, toggle	1	
–38	ST22N	S10205	. . SWITCH, toggle	1	
–39	NP125976A	—	. . PLATE, identification	5	
–40	1222–1	—	. . WASHER, lock (Att. Pt. for items 34 thru 39) (Shakeproof)	5	
–41	ST52S	S10206	. . SWITCH, toggle	1	
–42	NP125976C	—	. . PLATE, identification	1	
–43	1222–1	—	. . WASHER, lock (Att. Pt. for items 41 and 42) (Shakeproof)	1	
–44	ST22N	S10207	. . SWITCH, toggle	1	
–45	1222–1	—	. . WASHER, lock (Att. Pt.) (Shakeproof)	1	
–46	5729215G4	S10208	. . SWITCH, push (GE)	1	
–47	5729215G4	S10209	. . SWITCH, push (GE)	1	
–48	K7872443	—	. . WASHER, flat	4	
–49	AN515B8–5	—	. . SCREW, mach: slot drive; RH; brass, black oxidized; No. 8–32; 5/16 in lg (Att. Pt. for items 46, 47 and 48)	4	
–50	AN936A8B	—	. . WASHER, lock: bronze, tinned; round, No. 8; shakeproof-type, tw int teeth (Att. Pt. for items 46, 47 and 48)	4	
–51	NP125984L	—	. . PLATE, identification	1	
–52	NP125984M	—	. . PLATE, identification	1	
–53	NP125984J	—	. . PLATE, identification	1	
–54	NP125984K	—	. . PLATE, identification	1	
–55	NP125984E	—	. . PLATE, identification	1	
–56	NP125984F	—	. . PLATE, identification	1	
–57	NP125984G	—	. . PLATE, identification	1	
–58	NP125984H	—	. . PLATE, identification	1	
–59	NP125920D	—	. . PLATE, identification	1	
–60	NP125920A	—	. . PLATE, identification	1	
–61	NP140076	—	. . PLATE, identification	1	
–62	NP125915H	—	. . PLATE, identification	1	
–63	NP136332B	—	. . PLATE, identification	1	
–64	NP125920B	—	. . PLATE, identification	1	
–65	Coml	—	. . SCREW, self-tapping: Phillips drive; Bind H; SS, black oxidized; No. 4–40; 1/4 in lg (Att. Pt. for items 51 thru 64) (Shakeproof)	31	
–66	T7666721P1	—	. . PANEL	1	
–67	AN520B10–7	—	. . SCREW, mach: slot drive; RH; brass, black oxidized; No. 10–32; 7/16 in lg (Att. Pt.)	12	

FIG. & INDEX NO.	PART NUMBER	REF SYMBOL	NOMENCLATURE 1 2 3 4 5 6 7	UNITS PER ASSY	APPLI-CATION
			MODULATOR CONTROL C–561/CPS–6B (Cont)		
75–68	AN936B10B	—	. . WASHER, lock: bronze, tinned; round, No. 10; shakeproof-type, tw ext teeth (Att. Pt.)	12	
–69	AN345–10	—	. . NUT, hex: steel, cad pl; No. 10–32 (Att. Pt.)	12	
–70	K7002919P1	—	. . LATCH, lever	1	
–71	K7002918P1	—	. . SCREW, mach (Att. Pt.)	1	
–72	AN936B416B	—	. . WASHER, lock: bronze, tinned; round, 1/4 in; shakeproof-type, tw ext teeth (Att. Pt.)	1	
–73	AN340–416	—	. . NUT, hex: steel, cad pl; 1/4 in–20 (Att. Pt.)	1	
–73A	K7006867P1	—	. . SCREW, mach	2	
–73B	AN936B6B	—	. . WASHER, lock: bronze, tinned; round, No. 6; shakeproof-type, tw ext teeth	2	
–73C	AN340–6	—	. . NUT, hex: steel, cad pl; No. 6–32	2	
–74	AN3108–28–16S	P10706	. . CONNECTOR, plug	1	
–75	AN3057–16	—	. . CLAMP	1	
–76	NP137428A	—	. . PLATE, identification	1	
–77	AN3108–16S4S	P10707	. . CONNECTOR, plug	1	
–78	AN3057–8	—	. . CLAMP	1	
–79	NP137428B	—	. . PLATE, identification	1	
–80	ML7664877G1	—	. . MODULATOR CONTROL C–562/CPS–6B (See Figure 76 for breakdown)	1	
–81	B0H06A120	K10206	. . RELAY, armature (Allied Cont)	1	
–82	B0H06A120	K10207	. . RELAY, armature (Allied Cont)	1	
–83	B0H06A120	K10213	. . RELAY, armature (Allied Cont)	1	
–84	B0H06A120	K10215	. . RELAY, armature (Allied Cont)	1	
–85	No Number	—	. . CHASSIS (W7352788P2 and P12 assembled)	1	
–86	CM35D472J	C10201	. . CAPACITOR, fixed	1	
–87	CM35D472J	C10202	. . CAPACITOR, fixed	1	
–88	CM35D472J	C10203	. . CAPACITOR, fixed	1	
–89	CM35D472J	C10204	. . CAPACITOR, fixed	1	
–90	CM35D472J	C10205	. . CAPACITOR, fixed	1	
–91	CM35D472J	C10211	. . CAPACITOR, fixed	1	
–92	T7666718P1	—	. . GUSSET	1	
–93	T7666718P2	—	. . GUSSET	1	
–94	AN520–10–7	—	. . SCREW, mach: slot drive; RH; steel, cad pl; No. 10–32; 7/16 in lg (Att. Pt. for items 92 and 93)	18	
–95	AN936B10B	—	. . WASHER, lock: bronze, tinned; round, No. 10; shakeproof-type, tw ext teeth (Att. Pt. for items 92 and 93)	18	
–96	AN345–10	—	. . NUT, hex: steel, cad pl; No. 10–32 (Att. Pt. for items 92 and 93)	18	
–97	SA57–2106	E10201	. . ARRESTOR, electrical surge (Auto Elec)	1	
–98	K7872443	—	. . WASHER, flat	2	
–99	K7874555P7	—	. . WASHER, flat	2	
–100	AN520–10–16	—	. . SCREW, mach: slot drive; RH; steel, cad pl; No. 10–32; 1 in lg (Att. Pt. for items 97, 98 and 99)	2	
–101	AN936B10B	—	. . WASHER, lock: bronze, tinned; round, No. 10; shakeproof-type, tw ext teeth (Att. Pt. for items 97, 98 and 99)	2	
–102	AN345–10	—	. . NUT, hex: steel, cad pl; No. 10–32 (Att. Pt. for items 97, 98 and 99)	2	
–103	CM35D472J	C10206	. . CAPACITOR, fixed	1	
–104	CM35D472J	C10207	. . CAPACITOR, fixed	1	
–105	CM35D472J	C10208	. . CAPACITOR, fixed	1	
–106	CM35D472J	C10209	. . CAPACITOR, fixed	1	
–107	CM35D472J	C10210	. . CAPACITOR, fixed	1	
–108	926C	—	. . CLAMP (Birtcher)	8	
–109	926D	—	. . CLAMP (Birtcher)	5	
–110	AN515–8–6	—	. . SCREW, mach: slot drive; RH; steel, cad pl; No. 8–32; 3/8 in lg (Att. Pt. for items 108 and 109)	13	
–111	AN936B8B	—	. . WASHER, lock: bronze, tinned; round, No. 8; shakeproof-type, tw ext teeth (Att. Pt. for items 108 and 109)	13	
–112	AN340–8	—	. . NUT, hex: steel, cad pl; No. 8–32 (Att. Pt. for items 108 and 109)	13	
–113	SK5127	K10201	. . RELAY, solenoid (Clare CP)	1	
–114	SK5127	K10202	. . RELAY, solenoid (Clare CP)	1	
–115	SK5127	K10203	. . RELAY, solenoid (Clare CP)	1	
–116	SK5127	K10204	. . RELAY, solenoid (Clare CP)	1	
–117	SK5127	K10205	. . RELAY, solenoid (Clare CP)	1	
–118	B0H06A120	K10208	. . RELAY, armature (Allied Cont)	1	
–119	B0H06A120	K10210	. . RELAY, armature (Allied Cont)	1	
–120	B0H06A120	K10211	. . RELAY, armature (Allied Cont)	1	
–121	B0H06A120	K10212	. . RELAY, armature (Allied Cont)	1	
–122	501	K10209	. . RELAY, time delay (Edison)	1	
–123	501	K10214	. . RELAY, time delay (Edison)	1	
–124	TSB8T101	XK10201	. . SOCKET, tube	1	
–125	TSB8T101	XK10202	. . SOCKET, tube	1	
–126	TSB8T101	XK10203	. . SOCKET, tube	1	
–127	TSB8T101	XK10204	. . SOCKET, tube	1	
–128	TSB8T101	XK10205	. . SOCKET, tube	1	
–129	TSB8T101	XK10206	. . SOCKET, tube	1	
–130	TSB8T101	XK10207	. . SOCKET, tube	1	
–131	TSB8T101	XK10208	. . SOCKET, tube	1	
–132	TSB8T101	XK10210	. . SOCKET, tube	1	
–133	TSB8T101	XK10211	. . SOCKET, tube	1	
–134	TSB8T101	XK10212	. . SOCKET, tube	1	
–135	TSB8T101	XK10213	. . SOCKET, tube	1	
–136	TSB8T101	XK10215	. . SOCKET, tube	1	
–137	TSB8T101	XK10209	. . SOCKET, tube	1	
–138	TSB8T101	XK10214	. . SOCKET, tube	1	
–139	AN515–6–5	—	. . SCREW, mach: slot drive; RH; steel, cad pl; No. 6–32; 5/16 in lg (Att. Pt. for items 124 thru 138)	30	

FIG. & INDEX NO.	PART NUMBER	REF SYMBOL	NOMENCLATURE 1 2 3 4 5 6 7	UNITS PER ASSY	APPLI-CATION
			MODULATOR CONTROL C–561/CPS–6B (Cont)		
75–140	AN936B6B	—	. . WASHER, lock: bronze, tinned; round, No. 6; shakeproof-type, tw ext teeth (Att. Pt. for items 124 thru 138)	30	
–141	AN340–6	—	. . NUT, hex: steel, cad pl; No. 6–32 (Att. Pt. for items 124 thru 138)	30	
–142	AN3102–28–2P	J10201	. . CONNECTOR, receptacle	1	
–143	AN3102–28–16P	J10203	. . CONNECTOR, receptacle	1	
–144	AN515–6–6	—	. . SCREW, mach: slot drive; RH; steel, cad pl; No. 6–32; 3/8 in lg (Att. Pt. for items 142 and 143)	8	
–145	AN936B6B	—	. . WASHER, lock: bronze, tinned; round, No. 6; shakeproof-type, tw ext teeth (Att. Pt. for items 142 and 143)	8	
–146	AN340–6	—	. . NUT, hex: steel, cad pl; No. 6–32 (Att. Pt. for items 142 and 143)	8	
–147	ML7460330G5	S5711B	. . SWITCH, interlock	1	
–148	AN515–6–10	—	. . SCREW, mach: slot drive; RH; steel, cad pl; No. 6–32; 5/8 in lg (Att. Pt.)	2	
–149	AN936B6B	—	. . WASHER, lock: bronze, tinned; round, No. 6; shakeproof-type, tw ext teeth (Att. Pt.)	2	
–150	AN340–6	—	. . NUT, hex: steel, cad pl; No. 6–32 (Att. Pt.)	2	
–151	M2R53P15	—	. . GROMMET	1	
–152	RW16F401	R10201	. . RESISTOR, fixed	1	
–153	ML7770257G3	—	. . MOUNTING, resistor	1	
–154	AN520–10–7	—	. . SCREW, mach: slot drive; RH; steel, cad pl; No. 10–32; 7/16 in lg (Att. Pt.)	2	
–155	AN936B10B	—	. . WASHER, lock: bronze, tinned; round, No. 10; shakeproof-type, tw ext teeth (Att. Pt.)	2	
			MODULATOR CONTROL C–562/CPS–6B		
76–	ML7664877G1	—	. . MODULATOR CONTROL C–562/CPS–6B (See Figure 75–80 for next higher assembly)	Ref	
–1	K7126123P1	—	. . . SCREW, captive	6	
–2	K7128235P5	—	. . . BUSHING	6	
–3	T7666715P1	—	. . . CHASSIS	1	
–4	CP65B1FF254K	C10701	. . . CAPACITOR, fixed	1	
–5	CP65B1FF254K	C10702	. . . CAPACITOR, fixed	1	
–6	CP65B1FF254K	C10703	. . . CAPACITOR, fixed	1	
–7	CP65B1FF254K	C10704	. . . CAPACITOR, fixed	1	
–8	CP65B1FF254K	C10705	. . . CAPACITOR, fixed	1	
–9	CP65B1FF105K	C10706	. . . CAPACITOR, fixed	1	
–10	CP65B1FF105K	C10707	. . . CAPACITOR, fixed	1	
–11	AN515–6–6	—	. . . SCREW, mach: slot drive; RH; steel, cad pl; No. 6–32; 3/8 in lg (Att. Pt. for items 4 thru 10)	14	
–12	AN936B6B	—	. . . WASHER, lock: bronze, tinned; round, No. 6; shakeproof-type, tw ext teeth (Att. Pt. for items 4 thru 10)	14	
–13	AN340–6	—	. . . NUT, hex: steel, cad pl; No. 6–32 (Att. Pt. for items 4 thru 10)	14	
–14	SJ21001	K10701	. . . RELAY, solenoid (Clare CP)	1	
–15	SJ21001	K10702	. . . RELAY, solenoid (Clare CP)	1	
–16	SJ21001	K10703	. . . RELAY, solenoid (Clare CP)	1	
–17	SJ21001	K10704	. . . RELAY, solenoid (Clare CP)	1	
–18	SJ21001	K10705	. . . RELAY, solenoid (Clare CP)	1	
–19	SJ21001	K10706	. . . RELAY, solenoid (Clare CP)	1	
–20	SJ21001	K10707	. . . RELAY, solenoid (Clare CP)	1	
–21	AN340–6	—	. . . NUT, hex; steel, cad pl; No. 6–32 (Att. Pt. for items 14 thru 20)	28	
–22	AN936B6B	—	. . . WASHER, lock: bronze, tinned; round, No. 6; shakeproof-type, tw ext teeth (Att. Pt. for items 14 thru 20)	28	
–23	7481548	T10701	. . . TRANSFORMER, power (GE)	1	
–24	AN340–8	—	. . . NUT, hex: steel, cad pl; No. 8–32 (Att. Pt.)	4	
–25	AN936B8B	—	. . . WASHER, lock: bronze, tinned; round, No. 8; shakeproof-type, tw ext teeth (Att. Pt.)	4	
–26	NP136332C	—	. . . PLATE, identification	1	
–27	Coml	—	. . . SCREW, self-tapping: Phillips drive; Bind H; SS, black oxidized; No. 4–40; 1/4 in lg (Att. Pt.) (Shakeproof)	4	
–28	T7664877P21	—	. . . POST, spacing	4	
	ML7128250G1	—	. . . RESISTOR ASSEMBLY, fixed	1	
–29	AN515–8–10	—	. . . SCREW, mach: slot drive; RH; steel, cad pl; No. 8–32; 5/8 in lg (Att. Pt. for items 28 and ML7128250G1)	4	
–30	AN936B8B	—	. . . WASHER, lock: bronze, tinned; round, No. 8; shakeproof-type, tw ext teeth (Att. Pt. for items 28 and ML7128250G1)	4	
–31	AN340–8	—	. . . NUT, hex: steel, cad pl; No. 8–32 (Att. Pt. for items 28 and ML7128250G1)	4	
–32	RC40BF223J	R10716	. . . . RESISTOR, fixed	1	
–33	RC40BF223J	R10717	. . . . RESISTOR, fixed	1	
–34	RC40BF223J	R10718	. . . . RESISTOR, fixed	1	
–35	RC40BF472J	R10719	. . . . RESISTOR, fixed	1	
–36	RC20BF334J	R10720	. . . . RESISTOR, fixed	1	
–37	RC20BF334J	R10721	. . . . RESISTOR, fixed	1	
–38	RC20BF225J	R10722	. . . . RESISTOR, fixed	1	
–39	RC20BF225J	R10723	. . . . RESISTOR, fixed	1	
–40	RC40BF332J	R10724	. . . . RESISTOR, fixed	1	
–41	RC20BF105J	R10725	. . . . RESISTOR, fixed	1	
–42	RC20BF105J	R10736	. . . . RESISTOR, fixed	1	
–43	RC20BF225J	R10737	. . . . RESISTOR, fixed	1	
–44	RC20BF225J	R10738	. . . . RESISTOR, fixed	1	
–45	RC20BF225J	R10739	. . . . RESISTOR, fixed	1	
–46	RC20BF225J	R10740	. . . . RESISTOR, fixed	1	
–47	RC20BF225J	R10741	. . . . RESISTOR, fixed	1	
	ML7128251G1	—	. . . . BOARD, terminal	1	

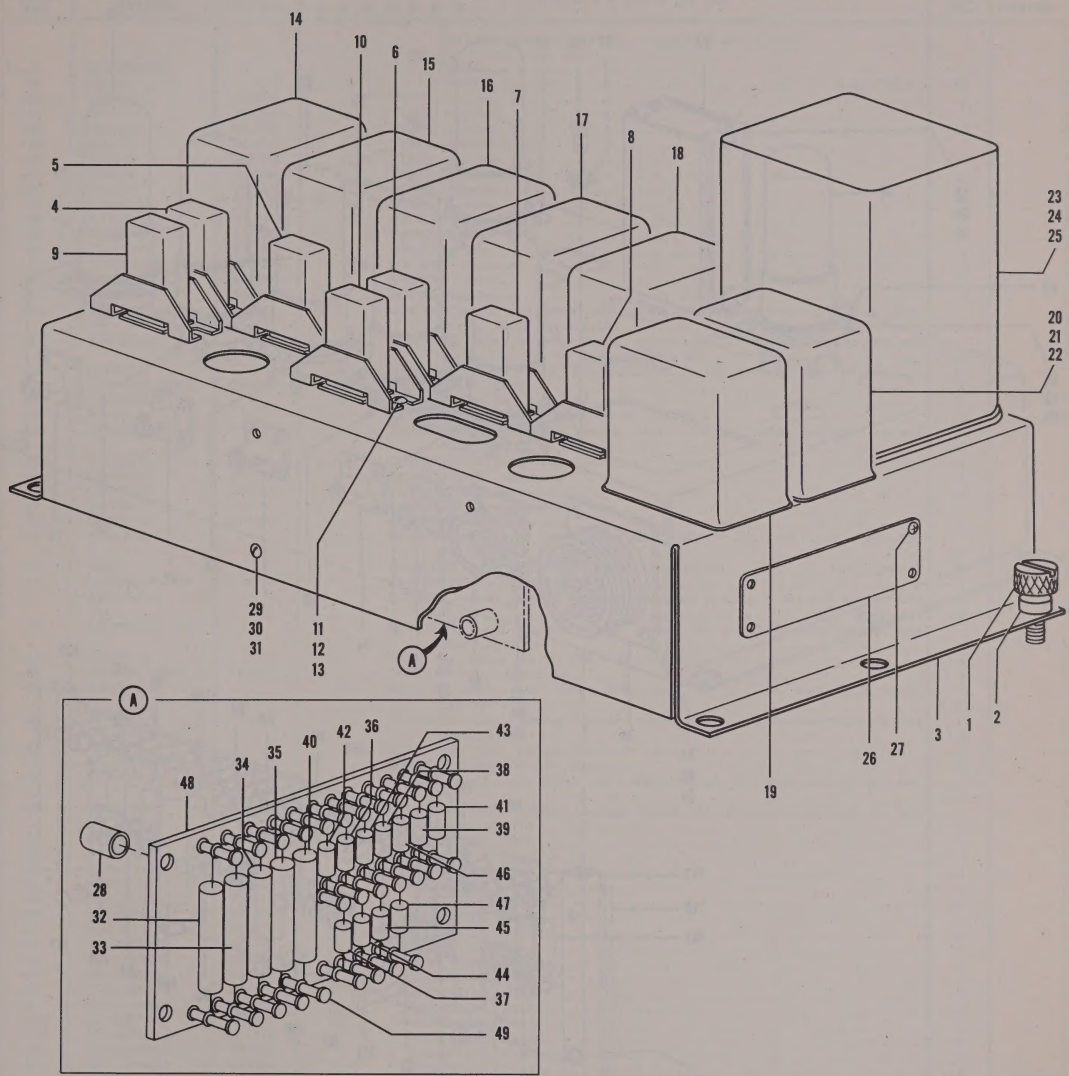

Figure 76. Modulator Control C–562/CPS–6B, Front View (Sheet 1 of 2 sheets, Index Nos. 1 thru 49)

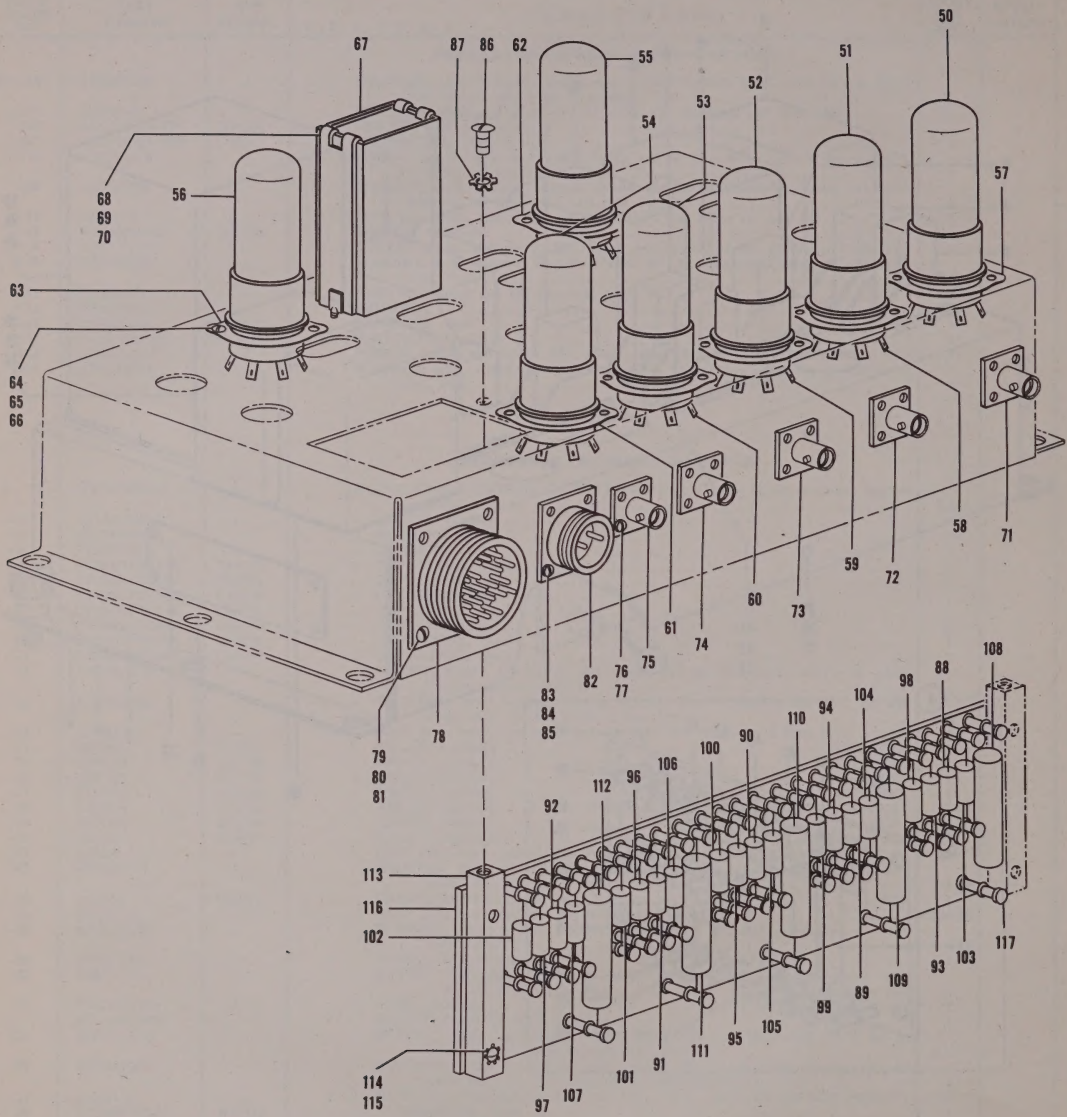

Figure 76. Modulator Control C–562/CPS–6B, Rear View (Sheet 2 of 2 sheets, Index Nos. 50 thru 117)

FIG. & INDEX NO.	PART NUMBER	REF SYMBOL	NOMENCLATURE 1 2 3 4 5 6 7	UNITS PER ASSY	APPLI-CATION
			MODULATOR CONTROL C–562/CPS–6B (Cont)		
76–48	M7128251P2	—	. . . . . PANEL	1	
–49	T100–3	—	. . . . . TERMINAL, stud (Bead Chain)	28	
–50	6SN7W	V10701	. . . TUBE, electron	1	
–51	6SN7W	V10702	. . . TUBE, electron	1	
–52	6SN7W	V10703	. . . TUBE, electron	1	
–53	6SN7W	V10704	. . . TUBE, electron	1	
–54	6SN7W	V10705	. . . TUBE, electron	1	
–55	6SN7W	V10706	. . . TUBE, electron	1	
–56	6SN7W	V10707	. . . TUBE, electron	1	
–57	TSB8T101	XV10701	. . . SOCKET, tube	1	
–58	TSB8T101	XV10702	. . . SOCKET, tube	1	
–59	TSB8T101	XV10703	. . . SOCKET, tube	1	
–60	TSB8T101	XV10704	. . . SOCKET, tube	1	
–61	TSB8T101	XV10705	. . . SOCKET, tube	1	
–62	TSB8T101	XV10706	. . . SOCKET, tube	1	
–63	TSB8T101	XV10707	. . . SOCKET, tube	1	
–64	AN515–6–6	—	. . . SCREW, mach: slot drive; RH; steel, cad pl; No. 6–32; 3/8 in lg (Att. Pt. for items 57 thru 63)	14	
–65	AN936B6B	—	. . . WASHER, lock: bronze, tinned; round, No. 6; shakeproof-type, tw ext teeth (Att. Pt. for items 57 thru 63)	14	
–66	AN340–6	—	. . . NUT, hex: steel, cad pl; No. 6–32 (Att. Pt. for items 57 thru 63)	14	
–67	CP70B1FF205K	C10709	. . . CAPACITOR, fixed	1	
–68	CP07SA3	—	. . . CLAMP (Att. Pt.)	2	
–69	AN345–10	—	. . . NUT, hex: steel, cad pl; No. 10–32 (Att. Pt.)	2	
–70	AN936B10B	—	. . . WASHER, lock: bronze, tinned; round, No. 10; shakeproof-type, tw ext teeth (Att. Pt.)	2	
–71	UG290/U	J10701	. . . CONNECTOR, receptacle	1	
–72	UG290/U	J10702	. . . CONNECTOR, receptacle	1	
–73	UG290/U	J10703	. . . CONNECTOR, receptacle	1	
–74	UG290/U	J10704	. . . CONNECTOR, receptacle	1	
–75	UG290/U	J10705	. . . CONNECTOR, receptacle	1	
–76	AN515–3–4	—	. . . SCREW, mach: slot drive; RH; steel, cad pl; No. 3–56; 1/4 in lg (Att. Pt. for items 71 thru 75)	20	
–77	1203	—	. . . WASHER, lock (Att. Pt. for items 71 thru 75) (Shakeproof)	20	
–78	AN3102–28–16P	J10706	. . . CONNECTOR, receptacle	1	
–79	AN515–6–6	—	. . . SCREW, mach: slot drive; RH; steel, cad pl; No. 6–32; 3/8 in lg (Att. Pt.)	4	
–80	AN936B6B	—	. . . WASHER, lock: bronze, tinned; round, No. 6; shakeproof-type, tw ext teeth (Att. Pt.)	4	
–81	AN340–6	—	. . . NUT, hex: steel, cad pl; No. 6–32 (Att. Pt.)	4	
–82	AN3102–16S4P	J10707	. . . CONNECTOR, receptacle	1	
–83	AN515–4–5	—	. . . SCREW, mach: slot drive; RH; steel, cad pl; No. 4–40; 5/16 in lg (Att. Pt.)	4	
–84	AN936B4B	—	. . . WASHER, lock: bronze, tinned; round, No. 4; shakeproof-type, tw ext teeth (Att. Pt.)	4	
–85	AN340–4	—	. . . NUT, hex: steel, cad pl; No. 4–40 (Att. Pt.)	4	
	ML7481913G1	—	. . . RESISTOR ASSEMBLY, fixed	1	
–86	AN515–8–6	—	. . . SCREW, mach: slot drive; RH; steel, cad pl; No. 8–32; 3/8 in lg (Att. Pt.)	2	
–87	AN936B8B	—	. . . WASHER, lock: bronze, tinned; round, No. 8; shakeproof-type, tw ext teeth (Att. Pt.)	2	
–88	RC20BF474J	R10701	. . . . RESISTOR, fixed	1	
–89	RC20BF474J	R10702	. . . . RESISTOR, fixed	1	
–90	RC20BF474J	R10703	. . . . RESISTOR, fixed	1	
–91	RC20BF474J	R10704	. . . . RESISTOR, fixed	1	
–92	RC20BF474J	R10705	. . . . RESISTOR, fixed	1	
–93	RC20BF104J	R10706	. . . . RESISTOR, fixed	1	
–94	RC20BF104J	R10707	. . . . RESISTOR, fixed	1	
–95	RC20BF104J	R10708	. . . . RESISTOR, fixed	1	
–96	RC20BF104J	R10709	. . . . RESISTOR, fixed	1	
–97	RC20BF104J	R10710	. . . . RESISTOR, fixed	1	
–98	RC20BF684J	R10711	. . . . RESISTOR, fixed	1	
–99	RC20BF684J	R10712	. . . . RESISTOR, fixed	1	
–100	RC20BF684J	R10713	. . . . RESISTOR, fixed	1	
–101	RC20BF684J	R10714	. . . . RESISTOR, fixed	1	
–102	RC20BF684J	R10715	. . . . RESISTOR, fixed	1	
–103	RC20BF680J	R10726	. . . . RESISTOR, fixed	1	
–104	RC20BF680J	R10727	. . . . RESISTOR, fixed	1	
–105	RC20BF680J	R10728	. . . . RESISTOR, fixed	1	
–106	RC20BF680J	R10729	. . . . RESISTOR, fixed	1	
–107	RC20BF680J	R10730	. . . . RESISTOR, fixed	1	
–108	RC40BF682J	R10731	. . . . RESISTOR, fixed	1	
–109	RC40BF682J	R10732	. . . . RESISTOR, fixed	1	
–110	RC40BF682J	R10733	. . . . RESISTOR, fixed	1	
–111	RC40BF682J	R10734	. . . . RESISTOR, fixed	1	
–112	RC40BF682J	R10735	. . . . RESISTOR, fixed	1	
	ML7481920G1	—	. . . . BOARD, terminal	1	
–113	K7126106P7	—	. . . . . POST, supporting	2	
–114	AN515–8–6	—	. . . . . SCREW, mach: slot drive; RH; steel, cad pl; No. 8–32; 3/8 in lg (Att. Pt.)	4	
–115	AN936B8B	—	. . . . . WASHER, lock: bronze, tinned; round, No. 8; shakeproof-type, tw ext teeth (Att. Pt.)	4	
–116	M7481920P2	—	. . . . . PANEL	1	
–117	T100–3	—	. . . . . TERMINAL, stud (Bead Chain)	50	

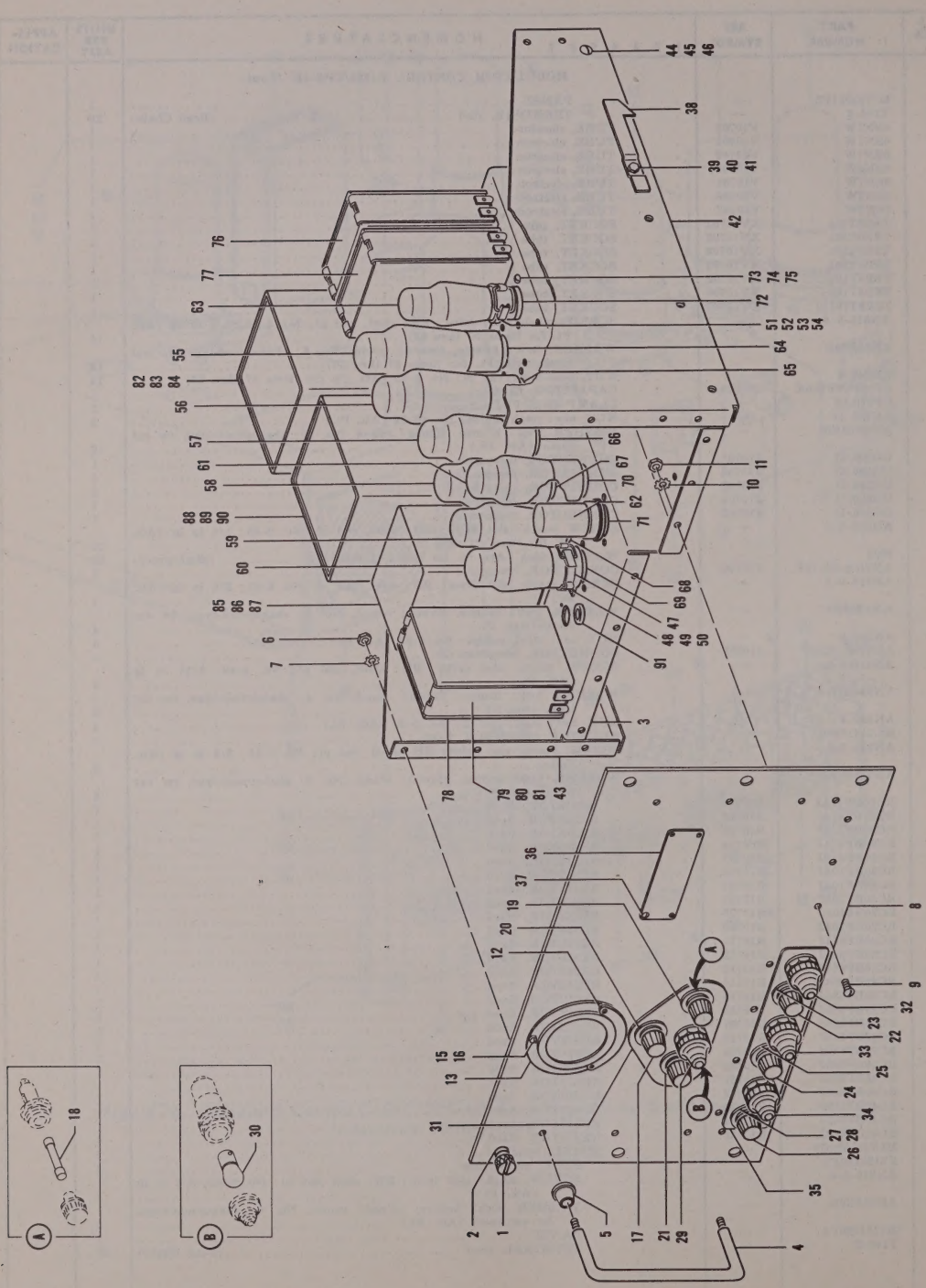

Figure 77. Power Supply PP–422/CPS–6B, Front View (Sheet 1 of 2 sheets, Index Nos. 1 thru 91)

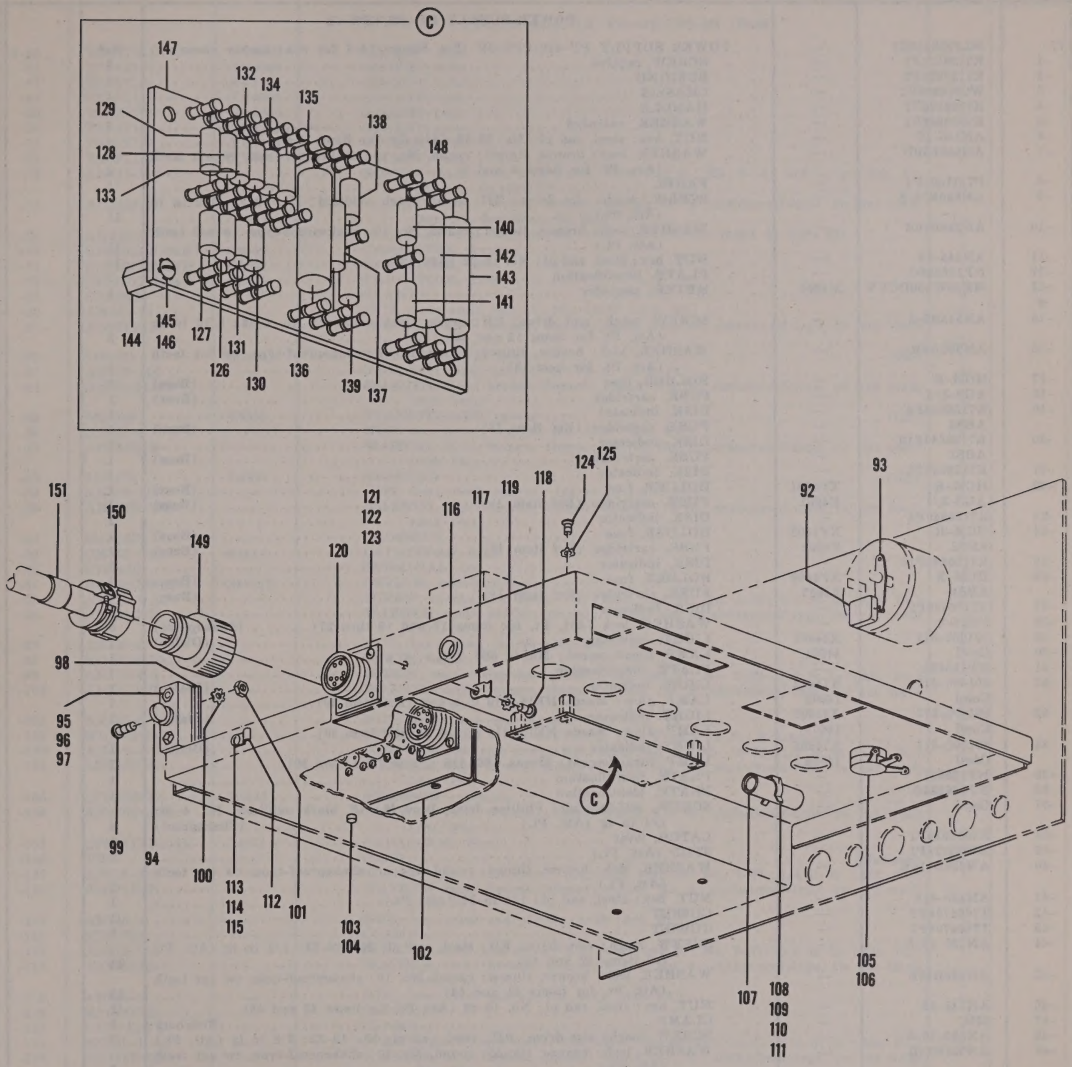

Figure 77. Power Supply PP–422/CPS–6B, Bottom-Rear View (Sheet 2 of 2 sheets, Index Nos. 92 thru 151)

FIG. & INDEX NO.	PART NUMBER	REF SYMBOL	NOMENCLATURE 1 2 3 4 5 6 7	UNITS PER ASSY	APPLI-CATION
			POWER SUPPLY PP–422/CPS–6B		
77–	ML7352545G1	—	. POWER SUPPLY PP–422/CPS–6B (See Figure 74–2 for next higher assembly)	Ref	
–1	K7126123P1	—	. . SCREW, captive	6	
–2	K7128235P2	—	. . BUSHING	6	
–3	W7353906P1	—	. . CHASSIS	1	
–4	K7002870P1	—	. . HANDLE	2	
–5	K7002869P1	—	. . WASHER, extruded	4	
–6	AN345–10	—	. . NUT, hex: steel, cad pl; No. 10–32 (Att. Pt. for items 4 and 5)	4	
–7	AN936B10B	—	. . WASHER, lock: bronze, tinned; round, No. 10; shakeproof-type, tw ext teeth (Att. Pt. for items 4 and 5)	4	
–8	P7771805P1	—	. . PANEL	1	
–9	AN520B10–8	—	. . SCREW, mach: slot drive; RH; brass, black oxidized; No. 10–32; 1/2 in lg (Att. Pt.)	11	
–10	AN936B10B	—	. . WASHER, lock: bronze, tinned; round, No. 10; shakeproof-type, tw ext teeth (Att. Pt.)	11	
–11	AN345–10	—	. . NUT, hex: steel, cad pl; No. 10–32 (Att. Pt.)	11	
–12	NP125298C	—	. . PLATE, identification	1	
–13	MR36W500DCVV	M4601	. . METER, ammeter	1	
✦					
–15	AN515B6–5	—	. . SCREW, mach: slot drive; RH; brass, black oxidized; No. 6–32; 5/16 in lg (Att. Pt. for items 12 and 13)	3	
–16	AN936A6B	—	. . WASHER, lock: bronze, tinned; round, No. 6; shakeproof-type, tw int teeth (Att. Pt. for item 13)	1	
–17	HCM–R	—	. . HOLDER, fuse (Buss)	3	
–18	AGS–3/4	—	. . FUSE, cartridge (Buss)	1	
–19	K7126649P4	—	. . DISK, indicator	1	
	ABS3	—	. . FUSE, cartridge (Ref item 18) (Buss)	1	
–20	K7126649P10	—	. . DISK, indicator	1	
	ABS1	—	. . FUSE, cartridge (Buss)	1	
–21	K7126649P5	—	. . DISK, indicator	1	
–22	HCM–R	XF4601	. . HOLDER, fuse (Buss)	1	
	AGS–3/4	F4601	. . FUSE, cartridge (Ref item 18) (Buss)	1	
–23	K7126649P4	—	. . DISK, indicator	1	
–24	HCM–R	XF4602	. . HOLDER, fuse (Buss)	1	
	ABS3	F4602	. . FUSE, cartridge (Ref item 18) (Buss)	1	
–25	K7126649P10	—	. . DISK, indicator	1	
–26	HCM–R	XF4603	. . HOLDER, fuse (Buss)	1	
	ABS1	F4603	. . FUSE, cartridge (Ref item 18) (Buss)	1	
–27	K7126649P5	—	. . DISK, indicator	1	
–28	12228–2	—	. . WASHER, lock (Att. Pt. for items 17 and 19 thru 27) (Shakeproof)	6	
–29	801002–511	XI4601	. . LIGHT, indicator (Dialco)	1	
–30	Coml	I4601	. . LAMP, incandescent: Mazda 6S6, 115 v, 6 w	1	
–31	NP125580	—	. . PLATE, identification	1	
–32	801006–517	XI4602	. . LIGHT, indicator (Dialco)	1	
	Coml	I4602	. . LAMP, glow: Mazda NE16, 110 v, 1/4 w (Ref item 30)	1	
–33	801006–517	XI4603	. . LIGHT, indicator (Dialco)	1	
	Coml	I4603	. . LAMP, glow: Mazda NE16, 110 v, 1/4 w (Ref item 30)	1	
–34	801002–511	XI4604	. . LIGHT, indicator (Dialco)	1	
	Coml	I4604	. . LAMP, incandescent: Mazda 6S6, 115 v, 6 w (Ref item 30)	1	
–35	NP125581	—	. . PLATE, identification	1	
–36	NP136333B	—	. . PLATE, identification	1	
–37	Coml	—	. . SCREW, self-tapping: Phillips drive, Bind H; SS, black oxidized; No. 4–40; 1/4 in lg (Att. Pt.) (Shakeproof)	4	
–38	K7002919P1	—	. . LATCH, lever	1	
–39	K7002918P1	—	. . STUD (Att. Pt.)	1	
–40	AN936B416B	—	. . WASHER, lock: bronze, tinned; round, 1/4 in; shakeproof-type, tw ext teeth (Att. Pt.)	1	
–41	AN340–416	—	. . NUT, hex: steel, cad pl; 1/4 in–20 (Att. Pt.)	1	
–42	T7666704P2	—	. . GUSSET	1	
–43	T7666704P1	—	. . GUSSET	1	
–44	AN520–10–8	—	. . SCREW, mach: slot drive; RH; steel, cad pl; No. 10–32; 1/2 in lg (Att. Pt. for items 42 and 43)	12	
–45	AN936B10B	—	. . WASHER, lock: bronze, tinned; round, No. 10; shakeproof-type, tw ext teeth (Att. Pt. for items 42 and 43)	12	
–46	AN345–10	—	. . NUT, hex: steel, cad pl; No. 10–32 (Att. Pt. for items 42 and 43)	12	
–47	926C	—	. . CLAMP (Birtcher)	7	
–48	AN520–10–6	—	. . SCREW, mach: slot drive; RH; steel, cad pl; No. 10–32; 3/8 in lg (Att. Pt.)	7	
–49	AN936B10B	—	. . WASHER, lock: bronze, tinned; round, No. 10; shakeproof-type, tw ext teeth (Att. Pt.)	7	
–50	AN345–10	—	. . NUT, hex: steel, cad pl; No. 10–32 (Att. Pt.)	7	
–51	926A	—	. . CLAMP (Birtcher)	1	
–52	AN520–10–8	—	. . SCREW, mach: slot drive; RH; steel, cad pl; No. 10–32; 3/8 in lg (Att. Pt.)	1	
–53	AN936B10B	—	. . WASHER, lock: bronze, tinned; round, No. 10; shakeproof-type, tw ext teeth (Att. Pt.)	1	
–54	AN345–10	—	. . NUT, hex: steel, cad pl; No. 10–32 (Att. Pt.)	1	
–55	5R4GY	V4601	. . TUBE, electron	1	
–56	5R4GY	V4602	. . TUBE, electron	1	
–57	6Y6G	V4603	. . TUBE, electron	1	
–58	6Y6G	V4604	. . TUBE, electron	1	
–59	6Y6G	V4605	. . TUBE, electron	1	
–60	6Y6G	V4606	. . TUBE, electron	1	
–61	6Y6G	V4607	. . TUBE, electron	1	
–62	6SH7	V4608	. . TUBE, electron	1	
–63	OD3/VR150	V4609	. . TUBE, electron	1	
–64	TSB8T101	XV4601	. . SOCKET, tube	1	

FIG. & INDEX NO.	PART NUMBER	REF SYMBOL	NOMENCLATURE 1 2 3 4 5 6 7	UNITS PER ASSY	APPLI-CATION
			POWER SUPPLY PP–422/CPS–6B (Cont)		
77–65	TSB8T101	XV4602	. . SOCKET, tube	1	
–66	TSB8T101	XV4603	. . SOCKET, tube	1	
–67	TSB8T101	XV4604	. . SOCKET, tube	1	
–68	TSB8T101	XV4605	. . SOCKET, tube	1	
–69	TSB8T101	XV4606	. . SOCKET, tube	1	
–70	TSB8T101	XV4607	. . SOCKET, tube	1	
–71	TSB8T101	XV4608	. . SOCKET, tube	1	
–72	TSB8T101	XV4609	. . SOCKET, tube	1	
–73	AN515–6–6	—	. . SCREW, mach: slot drive; RH; steel, cad pl; No. 6–32; 3/8 in lg (Att. Pt. for items 64 thru 72)	18	
–74	AN936B6B	—	. . WASHER, lock: bronze, tinned; round, No. 6; shakeproof-type, tw ext teeth (Att. Pt. for items 64 thru 72)	18	
–75	AN340–6	—	. . NUT, hex: steel, cad pl; No. 6–32 (Att. Pt. for items 64 thru 72)	18	
–76	CP70B1FG106K	C4601	. . CAPACITOR, fixed	1	
–77	CP70B1FG106K	C4602	. . CAPACITOR, fixed	1	
–78	CP70B1FG106K	C4603	. . CAPACITOR, fixed	1	
–79	CP07SD5	—	. . CLAMP	6	
–80	AN345–10	—	. . NUT, hex: steel, cad pl; No. 10–32 (Att. Pt.)	12	
–81	AN936B10B	—	. . WASHER, lock: bronze, tinned; round, No. 10; shakeproof-type, tw ext teeth (Att. Pt.)	12	
–82	7480475	T4601	. . TRANSFORMER, power (GE)	1	
–83	AN340–416	—	. . NUT, hex: steel, cad pl; 1/4 in–20 (Att. Pt.)	8	
–84	AN936B416B	—	. . WASHER, lock: bronze, tinned; round, 1/4 in; shakeproof-type, tw ext teeth (Att. Pt.)	4	
–85	7481548	T4602	. . TRANSFORMER, power (GE)	1	
–86	AN340–8	—	. . NUT, hex: steel, cad pl; No. 8–32 (Att. Pt.)	4	
–87	AN936B8B	—	. . WASHER, lock: bronze, tinned; round, No. 8; shakeproof-type, tw ext teeth (Att. Pt.)	4	
–88	7480478	L4601	. . REACTOR (GE)	1	
–89	AN340–416	—	. . NUT, hex: steel, cad pl; 1/4 in–20 (Att. Pt.)	8	
–90	AN936B416B	—	. . WASHER, lock: bronze, tinned; round, 1/4 in; shakeproof-type, tw ext teeth (Att. Pt.)	4	
–91	M2R53P5	—	. . GROMMET	1	
–92	CM35D472J	C4604	. . CAPACITOR, fixed	1	
–93	K7874694	—	. . TERMINAL, lug	2	
–94	ML7460330G5	S5712B	. . SWITCH, interlock	1	
–95	AN515–6–10	—	. . SCREW, mach: slot drive; RH; steel, cad pl; No. 6–32; 5/8 in lg (Att. Pt.)	2	
–96	AN936B6B	—	. . WASHER, lock: bronze, tinned; round, No. 6; shakeproof-type, tw ext teeth (Att. Pt.)	2	
–97	AN340–6	—	. . NUT, hex: steel, cad pl; No. 6–32 (Att. Pt.)	2	
–98	K7128267P1	—	. . PLATE, angle	1	
–99	AN515–6–6	—	. . SCREW, mach: slot drive; RH; steel, cad pl; No. 6–32; 3/8 in lg (Att. Pt.)	2	
–100	AN936B6B	—	. . WASHER, lock: bronze, tinned; round, No. 6; shakeproof-type, tw ext teeth (Att. Pt.)	2	
–101	AN340–6	—	. . NUT, hex: steel, cad pl; No. 6–32 (Att. Pt.)	2	
–102	ML7770785G1	—	. . RF AMPLIFIER AM–269/CPS–6B (See Figure 78 for breakdown)	1	
–103	AN520–10–8	—	. . SCREW, mach: slot drive; RH; steel, cad pl; No. 10–32; 1/2 in lg (Att. Pt.)	4	
–104	AN936B10B	—	. . WASHER, lock: bronze, tinned; round, No. 10; shakeproof-type, tw ext teeth (Att. Pt.)	4	
–105	P7768146P4	R4612	. . RESISTOR, variable	1	
–106	AN936B616B	—	. . WASHER, lock: bronze, tinned; round, 3/8 in; shakeproof-type, tw ext teeth (Att. Pt.)	1	
–107	CP26A1EF104K	C4605	. . CAPACITOR, fixed	1	
–108	TH17	—	. . CLIP (Mallory)	1	
–109	AN515–4–4	—	. . SCREW, mach: slot drive; RH; steel, cad pl; No. 4–40; 1/4 in lg (Att. Pt.)	1	
–110	AN936B4B	—	. . WASHER, lock: bronze, tinned; round, No. 4; shakeproof-type, tw ext teeth (Att. Pt.)	1	
–111	AN340–4	—	. . NUT, hex: steel, cad pl; No. 4–40 (Att. Pt.)	1	
–112	K7878739	—	. . CLAMP	1	
–113	AN515–6–6	—	. . SCREW, mach: slot drive; RH; steel, cad pl; No. 6–32; 3/8 in lg (Att. Pt.)	1	
–114	AN936B6B	—	. . WASHER, lock: bronze, tinned; round, No. 6; shakeproof-type, tw ext teeth (Att. Pt.)	1	
–115	AN340–6	—	. . NUT, hex: steel, cad pl; No. 6–32 (Att. Pt.)	1	
–116	M2R53P22	—	. . GROMMET	1	
–117	K7878484P1	—	. . CLAMP	1	
–118	AN520–10–4	—	. . SCREW, mach: slot drive; RH; steel, cad pl; No. 10–32; 1/4 in lg (Att. Pt.)	1	
–119	AN936B10B	—	. . WASHER, lock: bronze, tinned; round, No. 10; shakeproof-type, tw ext teeth (Att. Pt.)	1	
–120	AN3102–22–33P	J4601	. . CONNECTOR, receptacle	1	
–121	AN515–4–6	—	. . SCREW, mach: slot drive; RH; steel, cad pl; No. 4–40; 3/8 in lg (Att. Pt.)	4	
–122	AN936B4B	—	. . WASHER, lock: bronze, tinned; round, No. 4; shakeproof-type, tw ext teeth (Att. Pt.)	4	
–123	AN340–4	—	. . NUT, hex: steel, cad pl; No. 4–40 (Att. Pt.)	4	
	ML7128223G1	—	. . RESISTOR ASSEMBLY, fixed	1	
–124	AN515–8–5	—	. . SCREW, mach: slot drive; RH; steel, cad pl; No. 8–32; 5/16 in lg (Att. Pt.)	4	
–125	AN936B8B	—	. . WASHER, lock: bronze, tinned; round, No. 8; shakeproof-type, tw ext teeth (Att. Pt.)	4	
–126	RC20BF102J	R4601	. . . RESISTOR, fixed	1	
–127	RC20BF331J	R4602	. . . RESISTOR, fixed	1	
–128	RC20BF102J	R4603	. . . RESISTOR, fixed	1	
–129	RC20BF331J	R4604	. . . RESISTOR, fixed	1	
–130	RC20BF102J	R4605	. . . RESISTOR, fixed	1	
–131	RC20BF331J	R4606	. . . RESISTOR, fixed	1	
–132	RC20BF102J	R4607	. . . RESISTOR, fixed	1	
–133	RC20BF331J	R4608	. . . RESISTOR, fixed	1	

FIG. & INDEX NO.	PART NUMBER	REF SYMBOL	NOMENCLATURE 1 2 3 4 5 6 7	UNITS PER ASSY	APPLI-CATION
			POWER SUPPLY PP–422/CPS–6B (Cont)		
77–134	RC20BF102J	R4609	. . . RESISTOR, fixed	1	
–135	RC20BF331J	R4610	. . . RESISTOR, fixed	1	
–136	RC40BF473J	R4611	. . . RESISTOR, fixed	1	
–137	RC30BF153J	R4613	. . . RESISTOR, fixed	1	
–138	RC20BF473J	R4614	. . . RESISTOR, fixed	1	
–139	RC20BF683J	R4615	. . . RESISTOR, fixed	1	
–140	RC20BF333J	R4618	. . . RESISTOR, fixed	1	
–141	RC20BF333J	R4619	. . . RESISTOR, fixed	1	
–142	RC40BF154J	R4620	. . . RESISTOR, fixed	1	
–143	RC40BF154J	R4621	. . . RESISTOR, fixed	1	
	ML7128222G1	—	. . . BOARD, terminal	1	
–144	M7480544P16F	—	. . . . POST, spacing	4	
–145	AN515–8–5	—	. . . . SCREW, mach: slot drive; RH; steel, cad pl; No. 8–32; 5/16 in lg (Att. Pt.)	4	
–146	AN936B8B	—	. . . . WASHER, lock: bronze, tinned; round, No. 8; shakeproof-type, tw ext teeth (Att. Pt.)	4	
–147	K7128222P2	—	. . . . PANEL	1	
–148	T100–3	—	. . . . TERMINAL, stud (Bead Chain)	35	
–149	AN3106–22–33S	P204	. . CONNECTOR, plug	1	
–150	AN3057–12	—	. . CLAMP	1	
–151	NP137428C	—	. . MARKER, cable	1	
			RF AMPLIFIER AM–269/CPS–6B		
78–	ML7770785G1	—	. . RF AMPLIFIER AM–269/CPS–6B (See Figure 77–102 for next higher assembly)	Ref	
–1	ML7771874G1	—	. . . CHASSIS	1	
–2	P7770822P6	—	. . . SHIELD, tube	1	
–3	12AU7	V201	. . . TUBE, electron	1	
–4	P7770822P3	XV201	. . . SOCKET, tube	1	
–5	8661	—	. . . SHIELD, tube (Cinch)	1	
–6	6J6	V202	. . . TUBE, electron	1	
–7	9309	XV202	. . . SOCKET, tube (Cinch)	1	
–8	8698	—	. . . SHIELD, tube (Cinch)	1	
–9	OB2	V203	. . . TUBE, electron	1	
–10	9309	XV203	. . . SOCKET, tube (Cinch)	1	
–11	AN515–4R5	—	. . . SCREW, mach: Phillips drive; RH; steel, cad pl; No. 4–40; 5/16 in lg (Att. Pt. for items 4, 7 and 10)	6	
–12	AN936B4B	—	. . . WASHER, lock: bronze, tinned; round, No. 4; shakeproof-type, tw ext teeth (Att. Pt. for items 4, 7 and 10)	6	
–13	AN340–4	—	. . . NUT, hex: steel, cad pl; No. 4–40 (Att. Pt. for items 4, 7 and 10)	6	
–14	7480472	T201	. . . TRANSFORMER, power (GE)	1	
–15	AN340–6	—	. . . NUT, hex: steel, cad pl; No. 6–32 (Att. Pt.)	4	
–16	AN936B6B	—	. . . WASHER, lock: bronze, tinned; round, No. 6; shakeproof-type, two ext teeth (Att. Pt.)	4	
–17	CP65B1FF105K	C201	. . . CAPACITOR, fixed	1	
–18	AN515–6R6	—	. . . SCREW, mach: Phillips drive; RH; steel, cad pl; No. 6–32; 3/8 in lg (Att. Pt.)	2	
–19	AN936B6B	—	. . . WASHER, lock: bronze, tinned; round, No. 6; shakeproof-type, tw ext teeth (Att. Pt.)	2	
–20	AN340–6	—	. . . NUT, hex: steel, cad pl; No. 6–32 (Att. Pt.)	2	
–21	CP26A1EF104K	C203	. . . CAPACITOR, fixed	1	
–22	TH17	—	. . . CLIP (Mallory)	1	
–23	AN515–4R4	—	. . . SCREW, mach: Phillips drive; RH; steel, cad pl; No. 4–40; 1/4 in lg (Att. Pt.)	1	
–24	AN936B4B	—	. . . WASHER, lock: bronze, tinned; round, No. 4; shakeproof-type, tw ext teeth (Att. Pt.)	1	
–25	AN340–4	—	. . . NUT, hex: steel, cad pl; No. 4–40 (Att. Pt.)	1	
–26	RW14F632	R204	. . . RESISTOR, fixed	1	
–27	ML7770257G2	—	. . . MOUNTING, resistor	1	
–28	AN520–10R8	—	. . . SCREW, mach: Phillips drive; RH; steel, cad pl; No. 10–32; 1/2 in lg (Att. Pt.)	2	
–29	AN936B10B	—	. . . WASHER, lock: bronze, tinned; round, No. 10; shakeproof-type, tw ext teeth (Att. Pt.)	2	
–30	AN345–10	—	. . . NUT, hex: steel, cad pl; No. 10–32 (Att. Pt.)	2	
–31	M2R53P12	—	. . . GROMMET	1	
–32	UG290/U	J201	. . . CONNECTOR, receptacle	1	
–33	UG290/U	J202	. . . CONNECTOR, receptacle	1	
–34	UG290/U	J203	. . . CONNECTOR, receptacle	1	
–35	AN520–3R4	—	. . . SCREW, mach: Phillips drive; RH; steel, cad pl; No. 3–56; 1/4 in lg (Att. Pt. for items 32, 33 and 34)	12	
–36	1203	—	. . . WASHER, lock (Att. Pt. for items 32, 33 and 34) (Shakeproof)	12	
–37	AN3102–22–33P	J204	. . . CONNECTOR, receptacle	1	
–38	AN515–4R6	—	. . . SCREW, mach: Phillips drive; RH; steel, cad pl; No. 4–40; 3/8 in lg (Att. Pt.)	4	
–39	AN936B4B	—	. . . WASHER, lock: bronze, tinned; round, No. 4; shakeproof-type, tw ext teeth (Att. Pt.)	4	
–40	AN340–4	—	. . . NUT, hex: steel, cad pl; No. 4–40 (Att. Pt.)	4	
–41	NP136333A	—	. . . PLATE, identification	1	

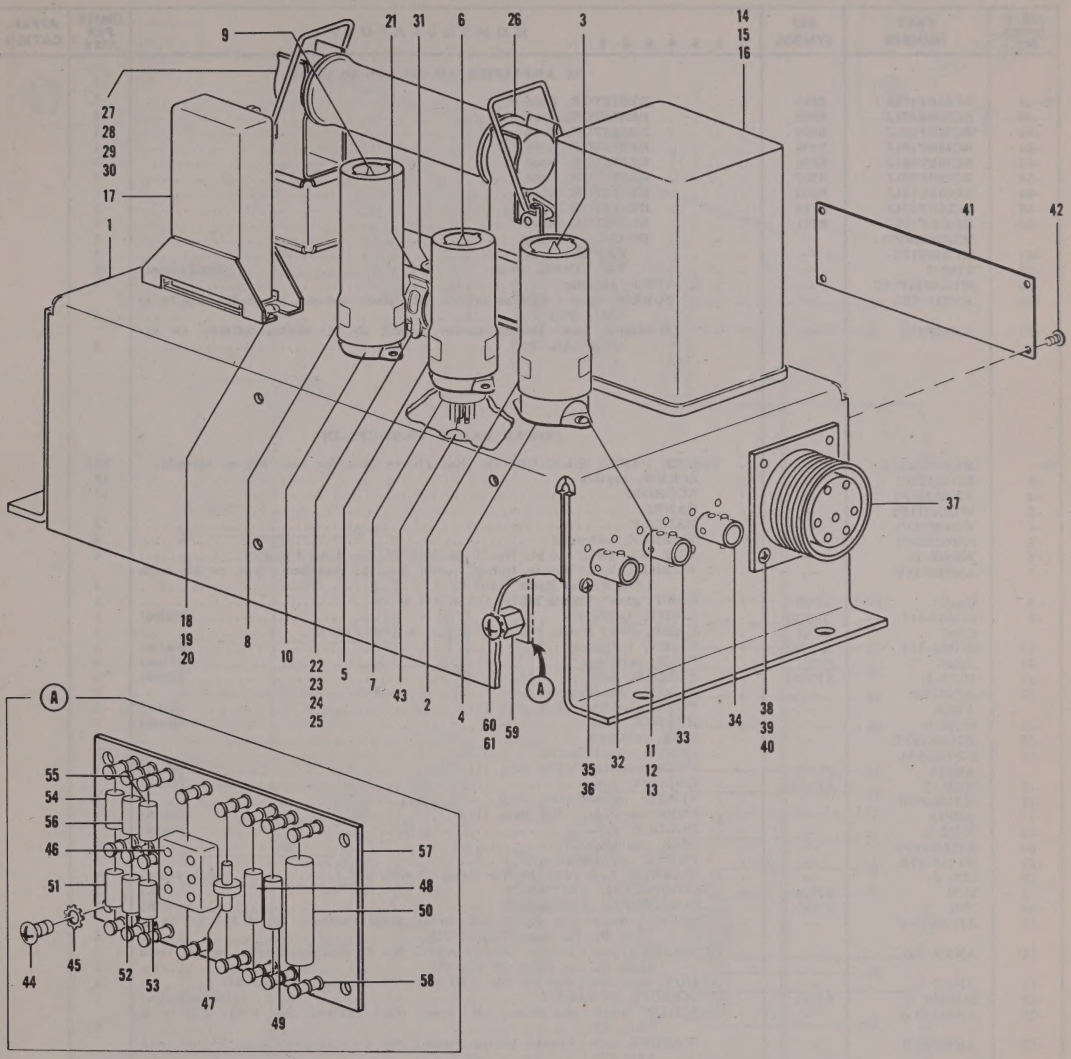

Figure 78. RF Amplifier AM–269/CPS–6B

FIG. & INDEX NO.	PART NUMBER	REF SYMBOL	1 2 3 4 5 6 7 NOMENCLATURE	UNITS PER ASSY	APPLI-CATION
			RF AMPLIFIER AM–269/CPS–6B (Cont)		
78–42	Coml	—	. . . SCREW, self-tapping: Phillips drive; Bind H; SS, black oxidized; No. 4–40; 3/16 in lg (Att. Pt.) (Shakeproof)	4	
–43	RC20BF101J	R209	. . . RESISTOR, fixed	1	
	ML7129255G1	—	. . . CAPACITOR-RESISTOR-COIL SUBASSEMBLY	1	
–44	AN515–8R4	—	. . . SCREW, mach: Phillips drive; RH; steel, cad pl; No. 8–32; 1/4 in lg (Att. Pt.)	4	
–45	AN936B8B	—	. . . WASHER, lock: bronze, tinned; round, No. 8; shakeproof-type, tw ext teeth (Att. Pt.)	4	
–46	CM35B103K	C202	. . . . CAPACITOR, fixed	1	
–47	ML7126181G3	L201	. . . . COIL, RF	1	

FIG. & INDEX NO.	PART NUMBER	REF SYMBOL	NOMENCLATURE 1 2 3 4 5 6 7	UNITS PER ASSY	APPLI-CATION
			RF AMPLIFIER AM–269/CPS–6B (Cont)		
78–48	RC30BF472J	R201	. . . . RESISTOR, fixed	1	
–49	RC30BF472J	R202	. . . . RESISTOR, fixed	1	
–50	RC40BF222J	R203	. . . . RESISTOR, fixed	1	
–51	RC20BF101J	R205	. . . . RESISTOR, fixed	1	
–52	RC20BF681J	R206	. . . . RESISTOR, fixed	1	
–53	RC20BF681J	R207	. . . . RESISTOR, fixed	1	
–54	RC20BF101J	R208	. . . . RESISTOR, fixed	1	
–55	RC20BF474J	R210	. . . . RESISTOR, fixed	1	
–56	RC20BF102J	R211	. . . . RESISTOR, fixed	1	
	ML7129251G1	—	. . . . BOARD, terminal	1	
–57	K7129251P2	—	. . . . . PANEL	1	
–58	T100–3	—	. . . . . TERMINAL, stud (Bead Chain)	19	
–59	M7480544P17C	—	. . . POST, spacing	4	
–60	AN515–8R4	—	. . . SCREW, mach: Phillips drive; RH; steel, cad pl; No. 8–32; 1/4 in lg (Att. Pt.)	4	
–61	AN936B8B	—	. . . WASHER, lock: bronze, tinned; round, No. 8; shakeproof-type, tw ext teeth (Att. Pt.)	4	
			POWER PANEL SB–88/CPS–6B		
79–	ML7353922G1	—	. POWER PANEL SB–88/CPS–6B (See Figure 74–3 for next higher assembly.	Ref	
–1	K7126123P1	—	. . SCREW, captive	16	
–2	K7128235P2	—	. . BUSHING	16	
–3	W7353921P1	—	. . PANEL	1	
–4	K7002870P1	—	. . HANDLE	2	
–5	K7002869P1	—	. . WASHER, extruded	4	
–6	AN345–10	—	. . NUT, hex: steel, cad pl; No. 10–32 (Att. Pt. for items 4 and 5)	4	
–7	AN936B10B	—	. . WASHER, lock: bronze, tinned; round, No. 10; shakeproof-type, tw ext teeth (Att. Pt. for items 4 and 5)	4	
–8	Coml	I5702	. . LAMP, glow: Mazda NE16, 110 v, 1/4 w	1	
–9	801006–517	XI5702	. . LIGHT, indicator (Dialco)	1	
	Coml	I5703	. . LAMP, glow: Mazda NE16, 110 v, 1/4 w (Ref item 8)	1	
–10	801006–517	XI5703	. . LIGHT, indicator (Dialco)	1	
–11	ABS5	F5701	. . FUSE, cartridge (Buss)	1	
–12	HCM–R	XF5701	. . HOLDER, fuse (Buss)	1	
–13	NP125783	—	. . PLATE, identification	1	
	ABS5	—	. . FUSE, cartridge (Ref item 11) (Buss)	1	
–14	HCM–R	—	. . HOLDER, fuse (Buss)	1	
–15	K7126649P7	—	. . DISK, indicator	2	
–16	NP125499A	—	. . PLATE, identification	1	
	ABS15	F5702	. . FUSE, cartridge (Ref item 11) (Buss)	1	
–17	HCM–R	XF5702	. . HOLDER, fuse (Buss)	1	
–18	NP125499B	—	. . PLATE, identification	1	
	ABS15	—	. . FUSE, cartridge (Ref item 11) (Buss)	1	
–19	HCM–R	—	. . HOLDER, fuse (Buss)	1	
–20	K7126649P9	—	. . DISK, indicator	2	
–21	NP125499A	—	. . PLATE, identification	1	
–22	1228–2	—	. . WASHER, lock (Att. Pt. for items 12 thru 21) (Shakeproof)	4	
–23	2679	J5718	. . CONNECTOR ASSEMBLY (GE)	1	
–24	2679	J5719	. . CONNECTOR ASSEMBLY (GE)	1	
–25	AN515B8–6	—	. . SCREW, mach: slot drive; RH; brass, black oxidized; No. 8–32; 3/8 in lg (Att. Pt. for items 23 and 24)	4	
–26	AN936B8B	—	. . WASHER, lock: bronze, tinned; round, No. 8; shakeproof-type, tw ext teeth (Att. Pt. for items 23 and 24)	4	
–27	AN340–8	—	. . NUT, hex: steel, cad pd; No. 8–32 (Att. Pt. for items 23 and 24)	4	
–28	3363S10	S5714	. . CIRCUIT BREAKER (Heinemann)	1	
–29	AN515B8–5	—	. . SCREW, mach: slot drive; RH; brass, black oxidized; No. 8–32; 5/16 in lg (Att. Pt.)	4	
–30	AN936A8B	—	. . WASHER, lock: bronze, tinned; round, No. 8; shakeproof-type, tw int teeth (Att. Pt.)	4	
–31	AM1515–30M6	S5701	. . CIRCUIT BREAKER (Heinemann)	1	
–32	AM1515–30M6	S5702	. . CIRCUIT BREAKER (Heinemann)	1	
–33	AM1515–30M6	S5703	. . CIRCUIT BREAKER (Heinemann)	1	
–34	AM1515–30M6	S5704	. . CIRCUIT BREAKER (Heinemann)	1	
–35	AM1515–30M6	S5705	. . CIRCUIT BREAKER (Heinemann)	1	
–36	AM1515–10M6	S5706	. . CIRCUIT BREAKER (Heinemann)	1	
–37	AM1515–10M6	S5707	. . CIRCUIT BREAKER (Heinemann)	1	
–38	AM1515–10M6	S5708	. . CIRCUIT BREAKER (Heinemann)	1	
–39	AM1515–6M6	S5709	. . CIRCUIT BREAKER (Heinemann)	1	
–40	AM1515–6M6	S5710	. . CIRCUIT BREAKER (Heinemann)	1	
–41	AN515B6–4	—	. . SCREW, mach: slot drive; RH; brass, black oxidized; No. 6–32; 1/4 in lg (Att. Pt. for items 31 thru 40)	20	
–42	AN936A6B	—	. . WASHER, lock: bronze, tinned; round, No. 6; shakeproof-type, tw int teeth (Att. Pt. for items 31 thru 40)	20	
–43	NP125992A	—	. . PLATE, identification	1	
–44	NP125992B	—	. . PLATE, identification	1	
–45	NP125845P	—	. . PLATE, identification	1	
–46	NP125113F1	—	. . PLATE, identification	2	
–47	NP125845E	—	. . PLATE, identification	1	
–48	NP125845F	—	. . PLATE, identification	1	
–49	NP125845G	—	. . PLATE, identification	1	

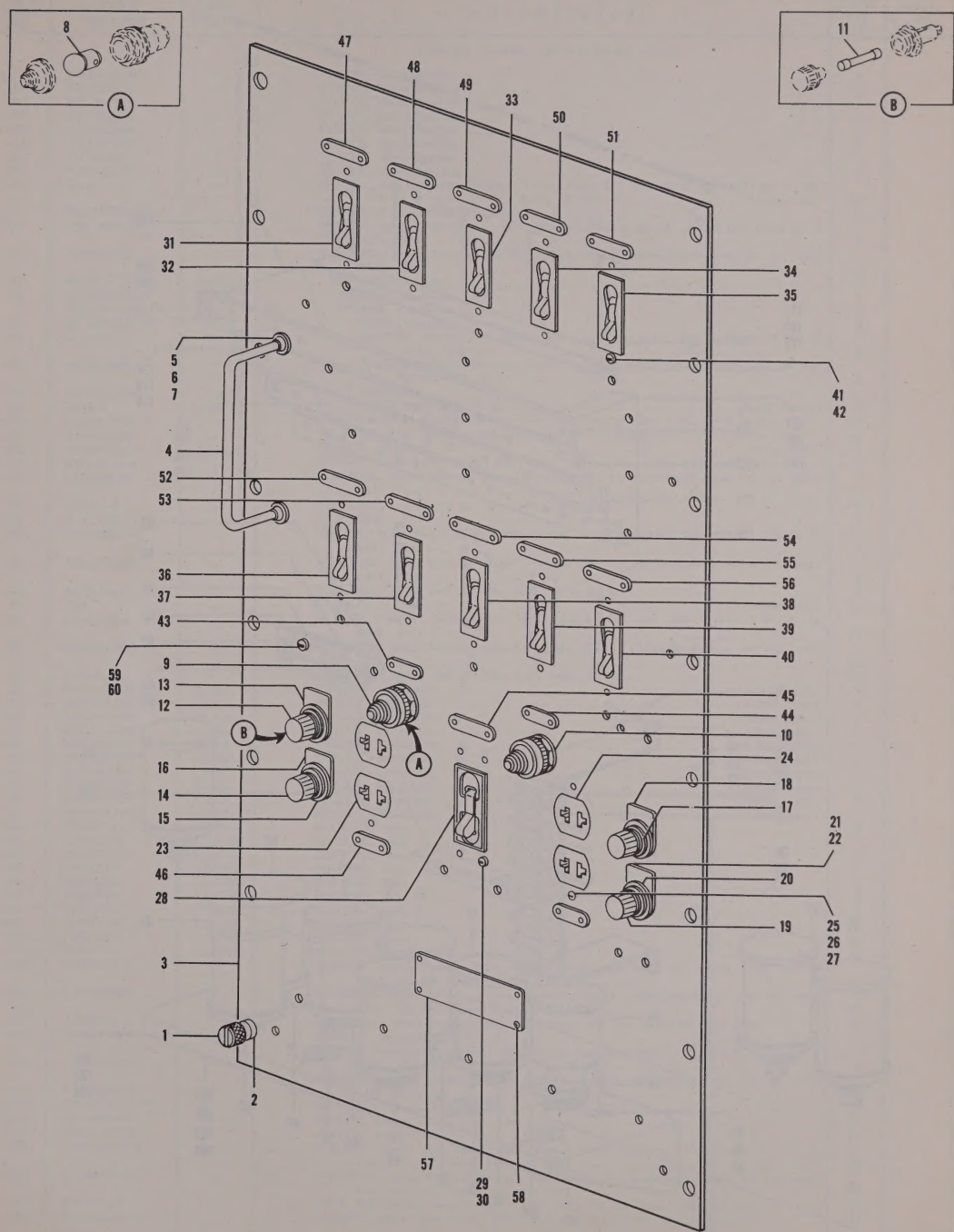

Figure 79. Power Panel SB–88/CPS–6B, Front View (Sheet 1 of 2 sheets, Index Nos. 1 thru 60)

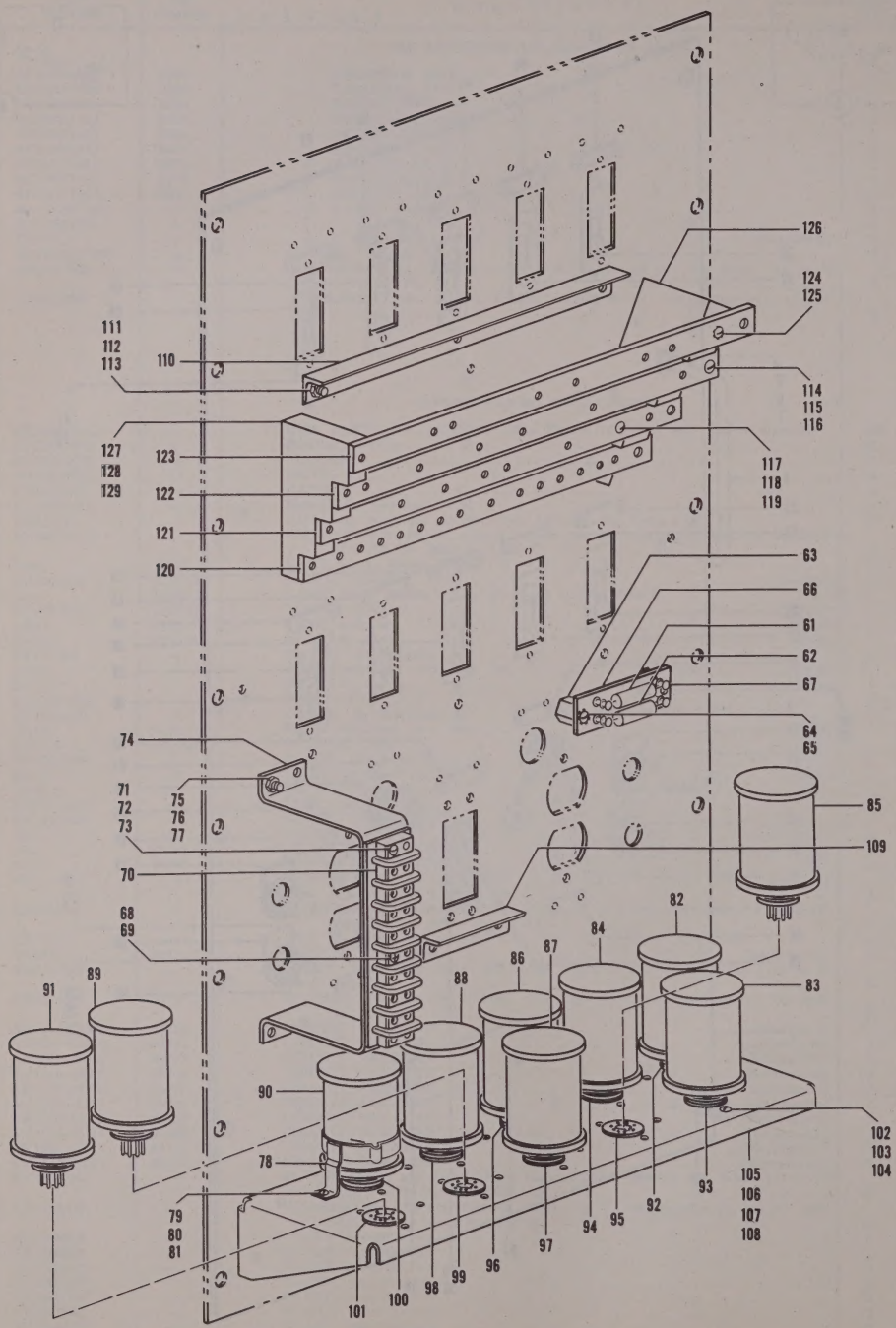

Figure 79. Power Panel SB–88/CPS–6B, Rear View (Sheet 2 of 2 sheets, Index Nos. 61 thru 129)

FIG. & INDEX NO.	PART NUMBER	REF SYMBOL	NOMENCLATURE 1 2 3 4 5 6 7	UNITS PER ASSY	APPLI-CATION
			POWER PANEL SB-88/CPS-6B (Cont)		
79-50	NP125845H	—	. . PLATE, identification	1	
-51	NP125845J	—	. . PLATE, identification	1	
-52	NP125845K	—	. . PLATE, identification	1	
-53	NP125845L	—	. . PLATE, identification	1	
-54	NP125845S	—	. . PLATE, identification	1	
-55	NP125845M	—	. . PLATE, identification	1	
-56	NP125845N	—	. . PLATE, identification	1	
-57	NP136333C	—	. . PLATE, identification	1	
-58	Coml	—	. . SCREW, self-tapping: Phillips drive; Bind H; SS, black oxidized; No. 4-40; 5/16 in lg (Att. Pt. for items 43 thru 57) (Shakeproof)	34	
	ML7129115G1	—	. . RESISTOR ASSEMBLY, fixed	1	
-59	AN515B8-5	—	. . SCREW, mach: slot drive; RH; brass, black oxidized; No. 8-32; 5/16 in lg (Att. Pt.)	2	
-60	AN936A8B	—	. . WASHER, lock: bronze, tinned; round, No. 8; shakeproof-type, tw int teeth (Att. Pt.)	2	
-61	RC40BF224J	R5701	. . . RESISTOR, fixed	1	
-62	RC40BF104J	R5702	. . . RESISTOR, fixed	1	
	ML7129116G1	—	. . . BOARD, terminal	1	
-63	M7480544P17F	—	. . . . POST, spacing	2	
-64	AN515-8-5	—	. . . . SCREW, mach: slot drive; RH; steel, cad pl; No. 8-32; 5/16 in lg (Att. Pt.)	2	
-65	AN936B8B	—	. . . . WASHER, lock: bronze, tinned; round, No. 8; shakeproof-type, tw ext teeth (Att. Pt.)	2	
-66	K7129116P2	—	. . . . PANEL	1	
-67	T100-3	—	. . . . STUD, terminal (Bead Chain)	4	
-68	AN515-8R5	—	. . SCREW, mach: Phillips drive; RH; steel, cad pl; No. 8-32; 5/16 in lg	16	
-69	AN936A8B	—	. . WASHER, lock: bronze, tinned; round, No. 8; shakeproof-type, tw int teeth	16	
-70	MSX8-142	TB5701	. . BOARD, terminal (Jones HB)	1	
-71	AN515-8-12	—	. . SCREW, mach: slot drive; RH; steel, cad pl; No. 8-32; 3/4 in lg (Att. Pt.)	4	
-72	AN936B8B	—	. . WASHER, lock: bronze, tinned; round, No. 8; shakeproof-type, tw ext teeth (Att. Pt.)	4	
-73	AN340-8	—	. . NUT, hex: steel, cad pl; No. 8-32 (Att. Pt.)	4	
-74	M7481955P1	—	. . BRACKET	1	
-75	AN520B10-8	—	. . SCREW, mach: slot drive; RH; brass, black oxidized; No. 10-32; 1/2 in lg (Att. Pt.)	4	
-76	AN936B10B	—	. . WASHER, lock: bronze, tinned; round, No. 10; shakeproof-type, tw ext teeth (Att. Pt.)	4	
-77	AN345-10	—	. . NUT, hex: steel, cad pl; No. 10-32 (Att. Pt.)	4	
-78	926C	—	. . CLAMP (Birtcher)	10	
-79	AN515-8-6	—	. . SCREW, mach: slot drive; RH; steel, cad pl; No. 8-32; 3/8 in lg (Att. Pt.)	10	
-80	AN936B8B	—	. . WASHER, lock: bronze, tinned; round, No. 8; shakeproof-type, tw ext teeth (Att. Pt.)	10	
-81	AN340-8	—	. . NUT, hex: steel, cad pl; No. 8-32 (Att. Pt.)	10	
-82	B0H06A120	K5701	. . RELAY, armature (Allied Cont)	1	
-83	B0H06A120	K5702	. . RELAY, armature (Allied Cont)	1	
-84	B0H06A120	K5703	. . RELAY, armature (Allied Cont)	1	
-85	B0H06A120	K5704	. . RELAY, armature (Allied Cont)	1	
-86	B0H06A120	K5705	. . RELAY, armature (Allied Cont)	1	
-87	B0H06A120	K5706	. . RELAY, armature (Allied Cont)	1	
-88	B0H06A120	K5707	. . RELAY, armature (Allied Cont)	1	
-89	B0H06A120	K5708	. . RELAY, armature (Allied Cont)	1	
-90	B0H06A120	K5709	. . RELAY, armature (Allied Cont)	1	
-91	B0H06A120	K5710	. . RELAY, armature (Allied Cont)	1	
-92	TSB8T101	XK5701	. . SOCKET, tube	1	
-93	TSB8T101	XK5702	. . SOCKET, tube	1	
-94	TSB8T101	XK5703	. . SOCKET, tube	1	
-95	TSB8T101	XK5704	. . SOCKET, tube	1	
-96	TSB8T101	XK5705	. . SOCKET, tube	1	
-97	TSB8T101	XK5706	. . SOCKET, tube	1	
-98	TSB8T101	XK5707	. . SOCKET, tube	1	
-99	TSB8T101	XK5708	. . SOCKET, tube	1	
-100	TSB8T101	XK5709	. . SOCKET, tube	1	
-101	TSB8T101	XK5710	. . SOCKET, tube	1	
-102	AN515-6-6	—	. . SCREW, mach: slot drive; RH; steel, cad pl; No. 6-32; 3/8 in lg (Att. Pt. for items 92 thru 101)	20	
-103	AN936B6B	—	. . WASHER, lock: bronze, tinned; round, No. 6; shakeproof-type, tw ext teeth (Att. Pt. for items 92 thru 101)	20	
-104	AN340-6	—	. . NUT, hex: steel, cad pl; No. 6-32 (Att. Pt. for items 92 thru 101)	20	
-105	T7666748P1	—	. . SHELF, mounting	1	
-106	AN520B10-8	—	. . SCREW, mach: slot drive; RH; brass, black oxidized; No. 10-32; 1/2 in lg (Att. Pt.)	7	
-107	AN936B10B	—	. . WASHER, lock: bronze, tinned; round, No. 10; shakeproof-type, tw ext teeth (Att. Pt.)	7	
-108	AN345-10	—	. . NUT, hex: steel, cad pl; No. 10-32 (Att. Pt.)	7	
-109	M7483000P1	—	. . PLATE, angle	1	
-110	M7483000P2	—	. . PLATE, angle	2	
-111	AN520B10-8	—	. . SCREW, mach: slot drive; RH; brass, black oxidized; No. 10-32; 1/2 in lg (Att. Pt. for items 109 and 110)	8	
-112	AN936B10B	—	. . WASHER, lock: bronze, tinned; round, No. 10; shakeproof-type, tw ext teeth (Att. Pt. for items 109 and 110)	8	
-113	AN345-10	—	. . NUT, hex: steel, cad pl; No. 10-32 (Att. Pt. for items 109 and 110)	8	
-114	AN515-416-14	—	. . SCREW, mach: slot drive; RH; steel, cad pl; 1/4 in-20; 7/8 in lg	4	

FIG. & INDEX NO.	PART NUMBER	REF SYMBOL	1 2 3 4 5 6 7 NAME & DESCRIPTION	UNITS PER ASSY	APPLI-CATION
			POWER PANEL SB–88/CPS–6B (Cont)		
79–115	AN936B416B	—	. . WASHER, lock: bronze, tinned; round, 1/4 in; shakeproof-type, tw ext teeth	4	
–116	AN340–416	—	. . NUT, hex: steel, cad pl; 1/4 in–20	4	
–117	AN520–10–10	—	. . SCREW, mach: slot drive; RH; steel, cad pl; No. 10–32; 5/8 in lg	25	
–118	AN936B10B	—	. . WASHER, lock: bronze, tinned; round, No. 10; shakeproof-type, tw ext teeth	25	
–119	AN345–10	—	. . NUT, hex: steel, cad pl; No. 10–32	25	
–120	P7771867P1	—	. . BAR, bus	1	
–121	P7771867P2	—	. . BAR, bus	1	
–122	P7771867P3	—	. . BAR, bus	1	
–123	P7771867P4	—	. . BAR, bus	1	
–124	AN520–10–8	—	. . SCREW, mach: slot drive; RH; steel, cad pl; No. 10–32; 1/2 in lg (Att. Pt. for items 120 thru 123)	12	
–125	AN936B10B	—	. . WASHER, lock: bronze, tinned; round, No. 10; shakeproof-type, tw ext teeth (Att. Pt. for items 120 thru 123)	12	
–126	M7481956P1	—	. . BLOCK, support	1	
–127	M7481957P1	—	. . BLOCK, support	2	
–128	AN520B10–6	—	. . SCREW, mach: slot drive; RH; brass, black oxidized; No. 10–32; 3/8 in lg (Att. Pt. for items 126 and 127)	9	
–129	AN936A10B	—	. . WASHER, lock: bronze, tinned; round, No. 10; shakeproof-type, tw int teeth (Att. Pt. for items 126 and 127)	9	

Figure 80. Deleted

Figure 80. Power Supply

FIG. & INDEX NO.	PART NUMBER	REF SYMBOL	NOMENCLATURE 1 2 3 4 5 6 7	UNITS PER ASSY	APPLI-CATION
			CABINET		
81-	ML7352791G1	—	. CABINET (See Figure 74-5 for next higher assembly)	Ref	
-1	ML7353027G2	—	. . CABINET (See Figure 59 for breakdown)	1	
-2	ML7665257G1	—	. . CONNECTOR ASSEMBLY (See Figure 82 for breakdown)	1	
-3	AN515B8-8	—	. . SCREW, mach: slot drive; RH; brass, black oxidized; No. 8-32; 1/2 in lg (Att. Pt.)	14	
-4	AN936A8B	—	. . WASHER, lock: bronze, tinned; round, No. 8; shakeproof-type, tw int teeth (Att. Pt.)	14	
-5	P1A	—	. . CLEANER, air (Air-Maze)	1	
-5A	A7016993P1	—	. . SCREEN	1	
-5B	A7016992P1	—	. . CLAMP (Att. Pt.)	1	
-5C	AN515-6-8	—	. . SCREW, mach: slot drive; RH; steel, cad pl; No. 6-32; 1/2 in lg (Att. Pt.)	1	
-5D	AN936B6B	—	. . WASHER, lock: bronze, tinned; round, No. 6; shakeproof-type, tw ext teeth (Att. Pt.)	1	
-5E	AN340-6	—	. . NUT, hex: steel, cad pl; No. 6-32 (Att. Pt.)	1	
-6	P7771760P2	B5701	. . BLOWER (See Figure 61 for breakdown)	1	
-7	Coml	—	. . SCREW, mach: hex head; steel, cad pl; 5/16 in-18; 3/4 in lg (Att. Pt.) (Amer Screw)	4	
-8	AN960-616L	—	. . WASHER, flat: steel, cad pl; 3/8 in (Att. Pt.)	4	
-9	AN936B516	—	. . WASHER, lock: steel, cad pl; round, 5/16 in; shakeproof-type, tw ext teeth (Att. Pt.)	4	
-10	AN340-516	—	. . NUT, hex: steel, cad pl; 5/16 in-18 (Att. Pt.)	4	
-11	ST22N	S5713	. . SWITCH, toggle	1	
-12	1222-1	—	. . WASHER, lock (Att. Pt.) (Shakeproof)	1	
-13	K7128233P1	—	. . BRACKET	1	
-14	AN515-8-6	—	. . SCREW, mach: slot drive; RH; steel, cad pl; No. 8-32; 3/8 in lg (Att. Pt.)	2	
-15	AN936A8B	—	. . WASHER, lock: bronze, tinned; round, No. 8; shakeproof-type, tw int teeth (Att. Pt.)	2	
-16	ST22N	S5717	. . SWITCH, toggle	1	
-17	ST22N	S5718	. . SWITCH, toggle	1	
-17A	ST22N	S5719	. . SWITCH, toggle	1	
-18	1222-1	—	. . WASHER, lock Att. Pt.) (Shakeproof)	3	
-19	K7128243P1	—	. . BRACKET	3	
-20	AN520-10-8	—	. . SCREW, mach: slot drive; RH; steel, cad pl; No. 10-32; 1/2 in lg (Att. Pt.)	6	
-21	AN936B10B	—	. . WASHER, lock: bronze, tinned; round, No. 10; shakeproof-type, tw ext teeth (Att. Pt.)	6	
-22	ML7460330G2	S5711A	. . SWITCH, interlock	1	
-23	ML7460330G2	S5712A	. . SWITCH, interlock	1	
-24	AN515-6-16	—	. . SCREW, mach: slot drive; RH; steel, cad pl; No. 6-32; 1 in lg (Att. Pt. for items 22 and 23)	4	
-25	AN936B6B	—	. . WASHER, lock: bronze, tinned; round, No. 6; shakeproof-type, tw ext teeth (Att. Pt. for items 22 and 23)	4	
-26	AN340-6	—	. . NUT, hex: steel, cad pl; No. 6-32 (Att. Pt. for items 22 and 23)	4	
-27	K7128244P1	—	. . BRACKET	2	
-28	AN520-10-8	—	. . SCREW, mach: slot drive; RH; steel, cad pl; No. 10-32; 1/2 in lg (Att. Pt.)	4	
-29	AN936B10B	—	. . WASHER, lock: bronze, tinned; round, No. 10; shakeproof-type, tw ext teeth (Att. Pt.)	4	
-30	AN345-10	—	. . NUT, hex: steel, cad pl; No. 10-32 (Att. Pt.)	4	
-31	ST22N	S5716	. . SWITCH, toggle	1	
-32	AN3028-1	—	. . GUARD	1	
-33	1222-1	—	. . WASHER, lock (Att. Pt. for items 31 and 32) (Shakeproof)	1	
-34	ML7460330G4	S5715	. . SWITCH, interlock	1	
-35	AN515-6-18	—	. . SCREW, mach: slot drive; RH; steel, cad pl; No. 6-32; 1-1/8 in lg (Att. Pt.)	2	
-36	AN936B6B	—	. . WASHER, lock: bronze, tinned; round, No. 6; shakeproof-type, tw ext teeth (Att. Pt.)	2	
-37	AN340-6	—	. . NUT, hex: steel, cad pl; No. 6-32 (Att. Pt.)	2	
-38	K7128234P1	—	. . PLATE, spacer	1	
-39	AN515B6-12	—	. . SCREW, mach: slot drive; RH; brass, black oxidized; No. 6-32; 3/4 in lg (Att. Pt. for items 34 and 38)	2	
-40	AN936B6B	—	. . WASHER, lock: bronze, tinned; round, No. 6; shakeproof-type, tw ext teeth (Att. Pt. for items 34 and 38)	2	
-41	AN340-6	—	. . NUT, hex: steel, cad pl; No. 6-32 (Att. Pt. for items 34 and 38)	2	
-42	K7128232P1	—	. . BRACKET	1	
-43	AN515-6-8	—	. . SCREW, mach: slot drive; RH; steel, cad pl; No. 6-32; 1/2 in lg (Att. Pt.)	2	
-44	AN936B6B	—	. . WASHER, lock: bronze, tinned; round, No. 6; shakeproof-type, tw ext teeth (Att. Pt.)	2	
-45	AN340-6	—	. . NUT, hex: steel, cad pl; No. 6-32 (Att. Pt.)	2	
-46	Coml	I5701	. . LAMP, incandescent: Mazda 50A/RS, 110 v, 50 w	1	
-47	M50721	XI5701	. . LAMPHOLDER (GE)	1	
-48	AN515B8-14	—	. . SCREW, mach: slot drive; RH; brass, black oxidized; No. 8-32; 7/8 in lg (Att. Pt.)	2	
-49	AN936B8B	—	. . WASHER, lock: bronze, tinned; round, No. 8; shakeproof-type, tw ext teeth (Att. Pt.)	2	
-50	AN340-8	—	. . NUT, hex: steel, cad pl; No. 8-32 (Att. Pt.)	2	
-51	K7003371P1	—	. . BRACKET	1	
-52	AN515B8-8	—	. . SCREW, mach: slot drive; RH; brass, black oxidized; No. 8-32; 1/2 in lg (Att. Pt.)	2	
-53	AN936B8B	—	. . WASHER, lock: bronze, tinned; round, No. 8; shakeproof-type, tw ext teeth (Att. Pt.)	2	
-54	AN340-8	—	. . NUT, hex: steel, cad pl; No. 8-32 (Att. Pt.)	2	
-55	K7002917P1	—	. . BLOCK, guide	4	

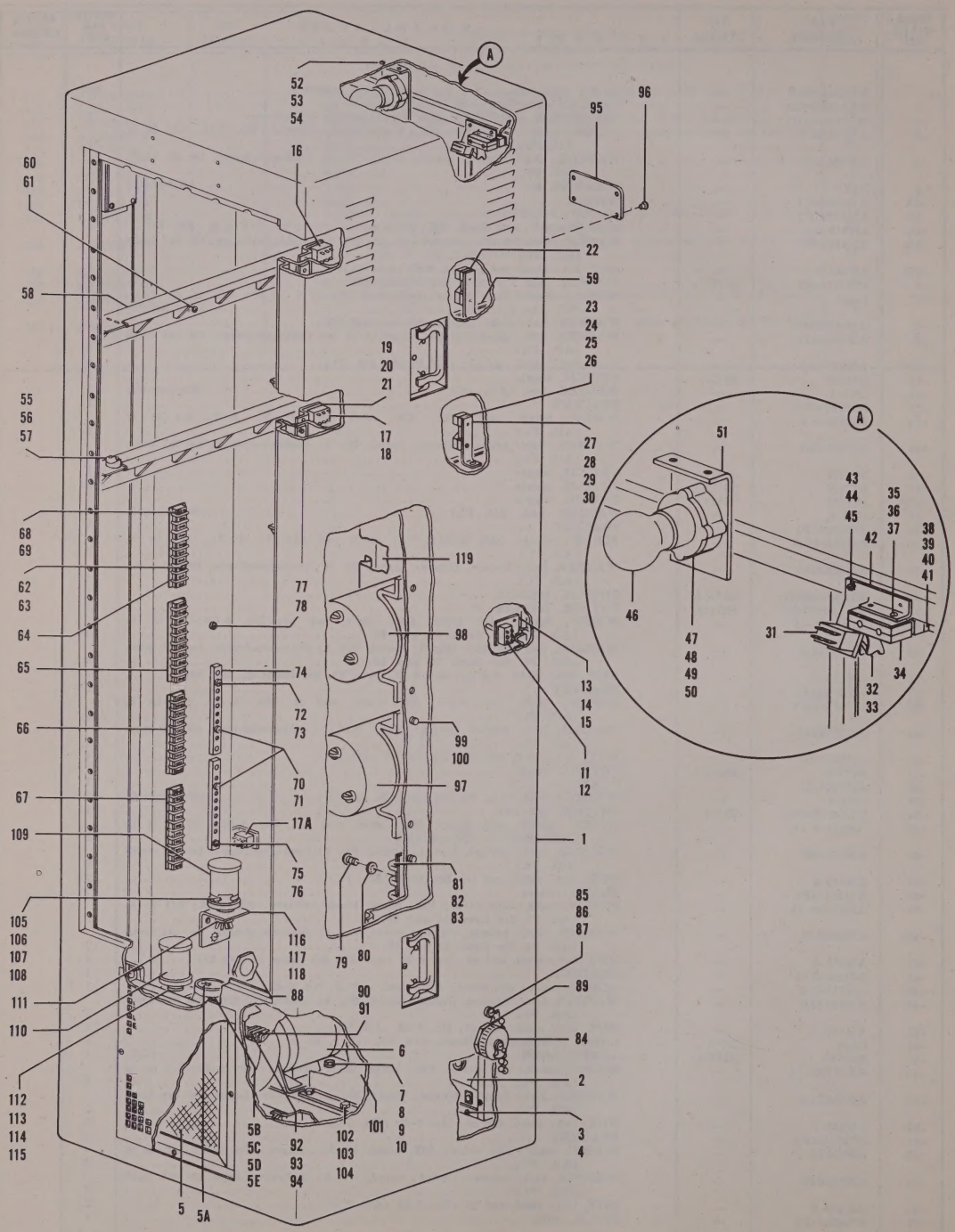

Figure 81. Cabinet

FIG. & INDEX NO.	PART NUMBER	REF SYMBOL	1 2 3 4 5 6 7 NOMENCLATURE	UNITS PER ASSY	APPLI-CATION
			CABINET (Cont)		
81–56	AN520–10–8	—	. . SCREW, mach: slot drive; RH; steel, cad pl; No. 10–32; 1/2 in lg (Att. Pt.)	8	
–57	AN936B10B	—	. . WASHER, lock: bronze, tinned; round, No. 10; shakeproof-type, tw ext teeth (Att. Pt.)	8	
–58	P7771770P1	—	. . GUIDE, drawer	2	
–59	P7771820P2	—	. . GUIDE, drawer	2	
–60	AN515–416R8	—	. . SCREW, mach: Phillips drive; RH; steel, cad pl; 1/4 in–20; 1/2 in lg (Att. Pt. for items 58 and 59)	28	
–61	AN936B416B	—	. . WASHER, lock: bronze, tinned; round, 1/4 in; shakeproof-type, tw ext teeth (Att. Pt. for items 58 and 59)	28	
–62	AN508–8–4	—	. . SCREW, mach: slot drive; RH; brass, tin pl; No. 8–32; 1/4 in lg	64	
–63	AN936A8B	—	. . WASHER, lock: bronze, tinned; round, No. 8; shakeproof-type, tw int teeth	64	
–64	MSX8–142	TB5704	. . BOARD, terminal (Jones HB)	1	
–65	MSX8–142	TB5705	. . BOARD, terminal (Jones HB)	1	
–66	MSX8–142	TB5706	. . BOARD, terminal (Jones HB)	1	
–67	MSX8–142	TB5707	. . BOARD, terminal (Jones HB)	1	
–68	AN515–8R10	—	. . SCREW, mach: Phillips drive; RH; steel, cad pl; No. 8–32; 5/8 in lg (Att. Pt. for items 64 thru 67)	16	
–69	AN936B8B	—	. . WASHER, lock: bronze, tinned; round, No. 8; shakeproof-type, tw ext teeth (Att. Pt. for items 64 thru 67)	16	
–70	AN515–416–8	—	. . SCREW, mach: slot drive; RH; steel, cad pl; 1/4 in–20; 3/8 in lg	4	
–71	AN936A416B	—	. . WASHER, lock: bronze, tinned; round, 1/4 in; shakeproof-type, tw int teeth	4	
–72	AN515–8–6	—	. . SCREW, mach: slot drive; RH; steel, cad pl; No. 8–32; 3/8 in lg	12	
–73	AN936A8B	—	. . WASHER, lock: bronze, tinned; round, No. 8; shakeproof-type, tw int teeth	12	
–74	M7482858P1	—	. . BAR, bus	2	
–75	AN520–10R10	—	. . SCREW, mach: Phillips drive; RH; steel, cad pl; No. 10–32; 5/8 in lg (Att. Pt.)	4	
–76	AN936A10B	—	. . WASHER, lock: bronze, tinned; round, No. 10; shakeproof-type, tw int teeth (Att. Pt.)	4	
–77	Coml	—	. . SCREW, mach: hex head; steel, cad pl; 1/4 in–20; 1/2 in lg	1	
–78	AN936A416B	—	. . WASHER, lock: bronze, tinned; round, 1/4 in; shakeproof-type, tw int teeth	1	
–79	AN520–416–6	—	. . SCREW, mach: slot drive; RH; steel, cad pl; 1/4 in–28; 3/8 in lg	8	
–80	AN936A416B	—	. . WASHER, lock: bronze, tinned; round, 1/4 in; shakeproof-type, tw int teeth	8	
–81	MSX4–152	TB5701	. . BOARD, terminal (Jones HB)	1	
–82	AN520–10–12	—	. . SCREW, mach: slot drive; RH; steel, cad pl; No. 10–32; 3/4 in lg (Att. Pt.)	4	
–83	AN936A10B	—	. . WASHER, lock: bronze, tinned; round, No. 10; shakeproof-type, tw int teeth (Att. Pt.)	4	
–84	9760–36	—	. . CAP AND CHAIN SUBASSEMBLY (Amphenol)	2	
–85	AN515–8–8	—	. . SCREW, mach: slot drive; RH; steel, cad pl; No. 8–32; 1/2 in lg (Att. Pt.)	2	
–86	AN936B8B	—	. . WASHER, lock: bronze, tinned; round, No. 8; shakeproof-type, tw ext teeth (Att. Pt.)	2	
–87	AN340–8	—	. . NUT, hex: steel, cad pl; No. 8–32 (Att. Pt.)	2	
–88	AN3064–28	—	. . FITTING, conduit	2	
–89	AN3066–28	—	. . NUT, hex: aluminum alloy; 2-1/4 in–16 (Att. Pt.)	2	
–90	AN508–6–4	—	. . SCREW, mach: slot drive; RH; brass, tin pl; No. 6–32; 1/4 in lg	8	
–91	AN936A6B	—	. . WASHER, lock: bronze, tinned; round, No. 6; shakeproof-type, tw int teeth	8	
–92	MSX4–141	TB5703	. . BOARD, terminal (Jones HB)	1	
–93	AN515–8–10	—	. . SCREW, mach: slot drive; RH; steel, cad pl; No. 8–32; 5/8 in lg (Att. Pt.)	4	
–94	AN936A8B	—	. . WASHER, lock: bronze, tinned; round, No. 8; shakeproof-type, tw int teeth (Att. Pt.)	4	
–95	NP136200	—	. . PLATE, identification	1	
–96	Coml	—	. . SCREW, self-tapping: Phillips drive; Bind H; SS, No. 4–40; 3/16 in lg (Att. Pt.) (Shakeproof)	4	
–97	6RS5HB54	CR5701	. . RECTIFIER, metallic (GE)	1	
–98	6RS5HB54	CR5702	. . RECTIFIER, metallic (GE)	1	
–99	Coml	—	. . SCREW, mach: hex head; steel, cad pl; 3/8 in–16; 1/2 in lg (Att. Pt. for items 97 and 98) (Amer Screw)	4	
–100	AN936B616B	—	. . WASHER, lock: bronze, tinned; round, 3/8 in; shakeproof-type, tw ext teeth (Att. Pt. for items 97 and 98)	4	
–101	7481560	T5701	. . TRANSFORMER, power (GE)	1	
–102	Coml	—	. . SCREW, mach: hex head; steel, cad pl; 3/8 in–16; 3/4 in lg (Att. Pt.) (Amer Screw)	4	
–103	AN936B616B	—	. . WASHER, lock: bronze, tinned; round, 3/8 in; shakeproof-type, tw ext teeth (Att. Pt.)	4	
–104	AN340–616	—	. . NUT, hex: steel, cad pl; 3/8 in–16 (Att. Pt.)	4	
–105	926P	—	. . CLAMP (Birtcher)	2	
–106	AN515–8–6	—	. . SCREW, mach: slot drive; RH; steel, cad pl; No. 8–32; 3/8 in lg (Att. Pt.)	2	
–107	AN936B8B	—	. . WASHER, lock: bronze, tinned; round, No. 8; shakeproof-type, tw ext teeth (Att. Pt.)	2	
–108	AN340–8	—	. . NUT, hex: steel, cad pl; No. 8–32 (Att. Pt.)	2	
–109	BOH06A120	K5711	. . RELAY, armature (Allied Cont)	1	
–110	BOH06A120	K5712	. . RELAY, armature (Allied Cont)	1	
–111	TSB8T101	XK5711	. . SOCKET, tube	1	
–112	TSB8T101	XK5712	. . SOCKET, tube	1	
–113	AN505–6–5	—	. . SCREW, mach: slot drive; FH; steel, cad pl; No. 6–32; 5/16 in lg (Att. Pt. for items 111 and 112)	4	
–114	AN936B6B	—	. . WASHER, lock: bronze, tinned; round, No. 6; shakeproof-type, tw ext teeth (Att. Pt. for items 111 and 112)	4	
–115	AN340–6	—	. . NUT, hex: steel, cad pl; No. 6–32 (Att. Pt. for items 111 and 112)	4	

FIG. & INDEX NO.	PART NUMBER	REF SYMBOL	1 2 3 4 5 6 7 NOMENCLATURE	UNITS PER ASSY	APPLI-CATION
			CABINET (Cont)		
81–116	K7000001P1	—	. . BRACKET	2	
–117	AN520–10–5	—	. . SCREW, mach: slot drive; RH; steel, cad pl; No. 10–32; 5/16 in lg (Att. Pt.)	6	
–118	AN936B10B	—	. . WASHER, lock: bronze, tinned; round, No. 10; shakeproof-type, tw ext teeth (Att. Pt.)	6	

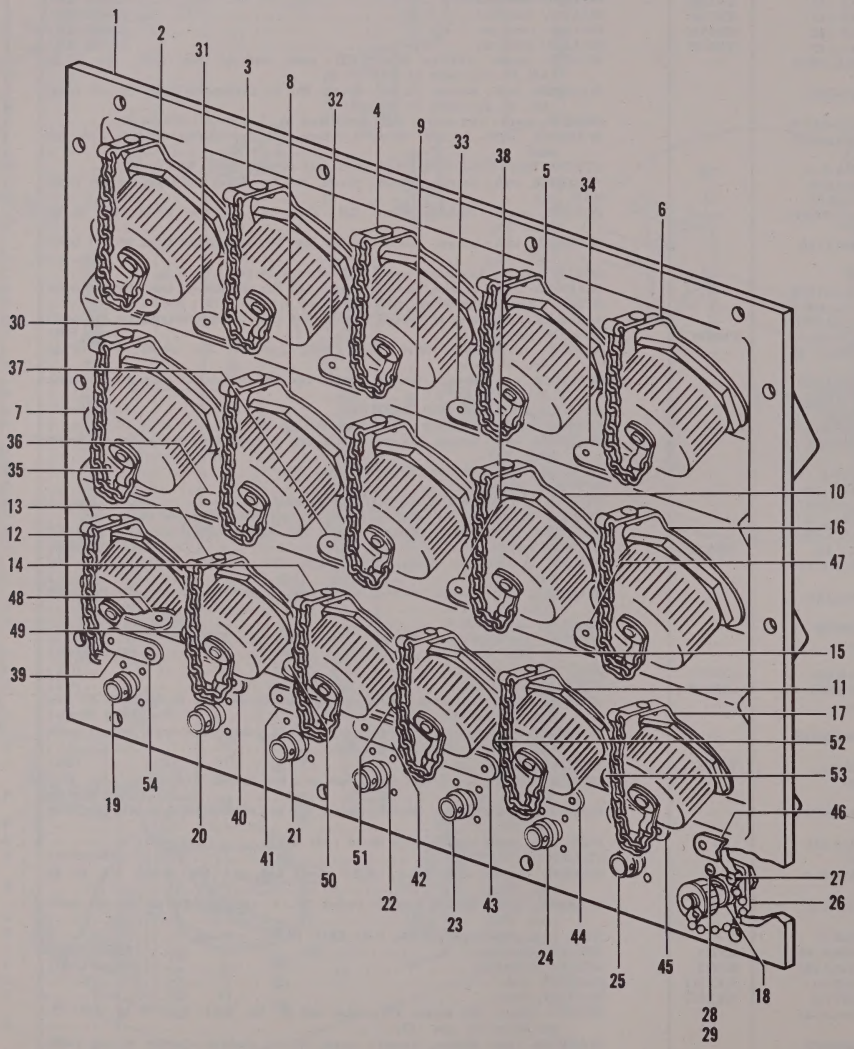

Figure 82. Connector Assembly

FIG. & INDEX NO.	PART NUMBER	REF SYMBOL	NOMENCLATURE 1 2 3 4 5 6 7	UNITS PER ASSY	APPLI-CATION
			CONNECTOR ASSEMBLY		
82–	ML7662557G1	—	. . CONNECTOR ASSEMBLY (See Figure 81–2 for next higher assembly)	Ref	
–1	T7665258P1	—	. . . PANEL	1	
–2	C1143	J5701	. . . CONNECTOR, receptacle (Buggie)	1	
–3	C1126	J5702	. . . CONNECTOR, receptacle (Buggie)	1	
–4	C1145	J5703	. . . CONNECTOR, receptacle (Buggie)	1	
–5	C1145	J5704	. . . CONNECTOR, receptacle (Buggie)	1	
–6	C1143	J5705	. . . CONNECTOR, receptacle (Buggie)	1	
–7	C1143	J5706	. . . CONNECTOR, receptacle (Buggie)	1	
–8	C1143	J5707	. . . CONNECTOR, receptacle (Buggie)	1	
–9	C1143	J5708	. . . CONNECTOR, receptacle (Buggie)	1	
–10	C1143	J5709	. . . CONNECTOR, receptacle (Buggie)	1	
–11	C1151	J5720	. . . CONNECTOR, receptacle (Buggie)	1	
–12	C1151	J5721	. . . CONNECTOR, receptacle (Buggie)	1	
–13	C1151	J5722	. . . CONNECTOR, receptacle (Buggie)	1	
–14	C1151	J5723	. . . CONNECTOR, receptacle (Buggie)	1	
–15	C1151	J5724	. . . CONNECTOR, receptacle (Buggie)	1	
–16	C1143	J5725	. . . CONNECTOR, receptacle (Buggie)	1	
–17	C1151	J5726	. . . CONNECTOR, receptacle (Buggie)	1	
–18	M7468534P2	—	. . . CAP AND CHAIN SUBASSEMBLY	8	
–19	UG262/U	J5710	. . . CONNECTOR, receptacle	1	
–20	UG262/U	J5711	. . . CONNECTOR, receptacle	1	
–21	UG262/U	J5712	. . . CONNECTOR, receptacle	1	
–22	UG262/U	J5713	. . . CONNECTOR, receptacle	1	
–23	UG262/U	J5714	. . . CONNECTOR, receptacle	1	
–24	UG262/U	J5715	. . . CONNECTOR, receptacle	1	
–25	UG262/U	J5716	. . . CONNECTOR, receptacle	1	
–26	UG262/U	J5717	. . . CONNECTOR, receptacle	1	
–27	AN510B3R6	—	. . . SCREW, mach: Phillips drive; FH; brass, black oxidized; No. 3–56; 3/8 in lg (Att. Pt. for items 18 thru 26)	8	
–28	AN520B3R6	—	. . . SCREW, mach: Phillips drive; RH; brass, black oxidized; No. 3–56; 3/8 in lg (Att. Pt. for items 19 thru 26)	24	
–29	1203	—	. . . WASHER, lock (Att. Pt. for items 19 thru 26) (Shakeproof)	24	
–30	NP137461E	—	. . . PLATE, identification	1	
–31	NP137461F	—	. . . PLATE, identification	1	
–32	NP137461G	—	. . . PLATE, identification	1	
–33	NP137461H	—	. . . PLATE, identification	1	
–34	NP137461J	—	. . . PLATE, identification	1	
–35	NP137461K	—	. . . PLATE, identification	1	
–36	NP137461L	—	. . . PLATE, identification	1	
–37	NP137461M	—	. . . PLATE, identification	1	
–38	NP137461N	—	. . . PLATE, identification	1	
–39	NP137461P	—	. . . PLATE, identification	1	
–40	NP137461R	—	. . . PLATE, identification	1	
–41	NP137461S	—	. . . PLATE, identification	1	
–42	NP137461T	—	. . . PLATE, identification	1	
–43	NP137461U	—	. . . PLATE, identification	1	
–44	NP137458A	—	. . . PLATE, identification	1	
–45	NP137458B	—	. . . PLATE, identification	1	
–46	NP137458C	—	. . . PLATE, identification	1	
–47	NP137458L	—	. . . PLATE, identification	1	
–48	NP137458G	—	. . . PLATE, identification	1	
–49	NP137458H	—	. . . PLATE, identification	1	
–50	NP137458J	—	. . . PLATE, identification	1	
–51	NP137458K	—	. . . PLATE, identification	1	
–52	NP137458F	—	. . . PLATE, identification	1	
–53	NP137458M	—	. . . PLATE, identification	1	
–54	Coml	—	. . . SCREW, self-tapping: Phillips drive; Bind H; SS, black oxidized; No. 4–40; 3/16 in lg (Att. Pt. for items 30 thru 53) (Shakeproof)	48	

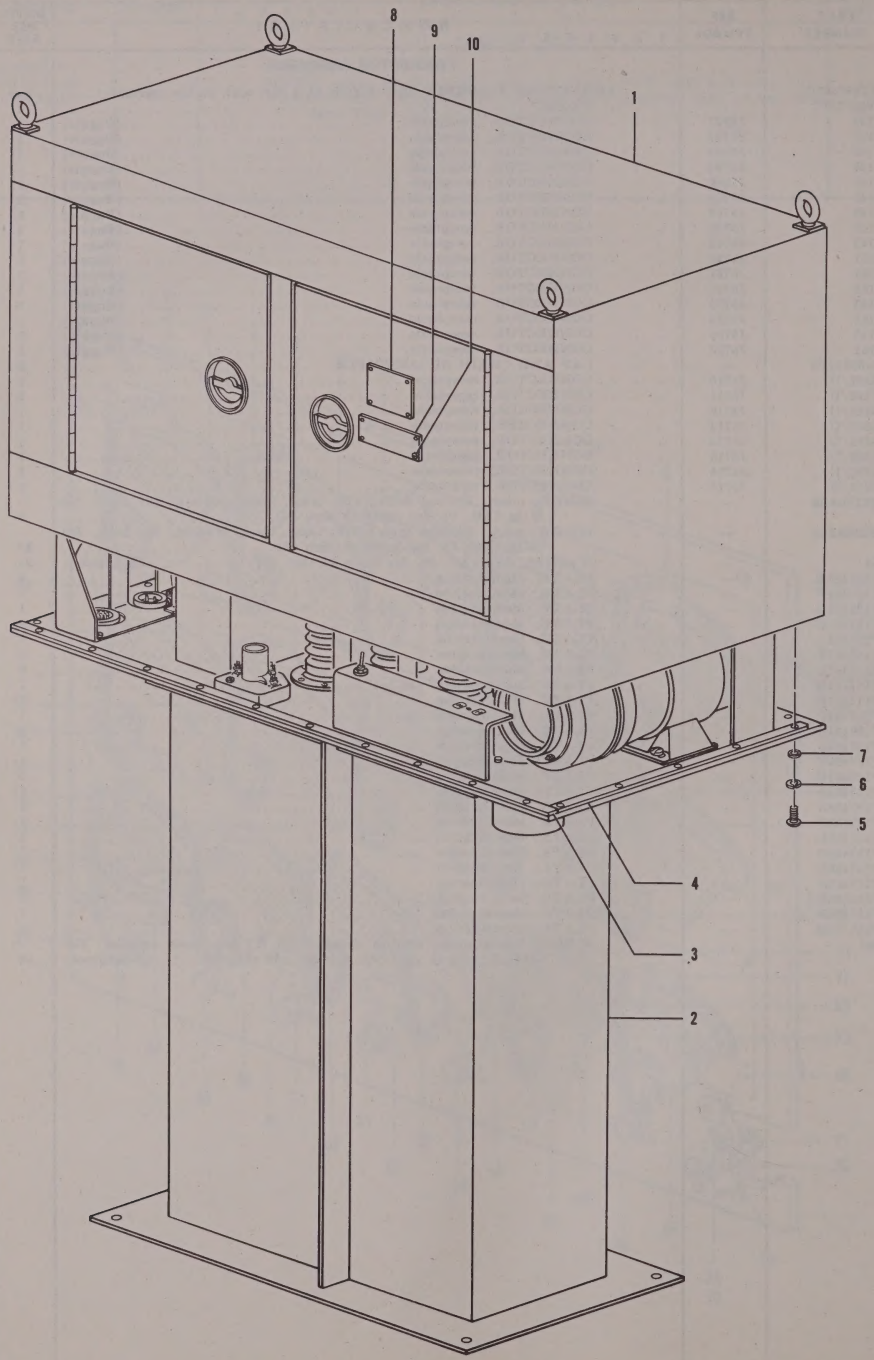

Figure 83. Power Supply PP–411/CPS–6B

FIG. & INDEX NO.	PART NUMBER	REF SYMBOL	1 2 3 4 5 6 7 NOMENCLATURE	UNITS PER ASSY	APPLI-CATION
			POWER SUPPLY PP–411/CPS–6B		
83–	DL9268574	—	POWER SUPPLY PP–411/CPS–6B .....(GE)	Ref	
–1	ML9524504G1	—	. CABINET (See Figure 84 for breakdown).....(GE)	1	
–2	ML9502850G1	—	. POWER SUPPLY (See Figure 85 for breakdown).....(GE)	1	
–3	W9502850P39	—	. GASKET .....(GE)	2	
–4	W9502850P40	—	. GASKET .....(GE)	2	
–5	AN515–416–12	—	. SCREW, mach: slot drive; RH; steel, cad pl; 1/4 in–20; 3/4 in lg (Att. Pt. for items 2, 3 and 4).....	30	
–6	AN935B416	—	. WASHER, lock: bronze, nickel pl; 1/4 in (Att. Pt. for items 2, 3 and 4).....	30	
–7	Coml	—	. WASHER, flat: steel, cad pl; round, 5/16 in ID, 3/4 in OD, 1/16 in thk (Att. Pt. for items 2, 3 and 4).....(Wrought Washer)	30	
–8	NP116062	—	. PLATE, identification .....(GE)	1	
–9	NP	—	. PLATE, identification .....(GE)	1	
–10	Coml	—	. SCREW, self-tapping: Phillips drive; FH; steel, cad pl; No. 4–40; 3/16 in lg (Att. Pt. for items 8 and 9).....(Shakeproof)	8	

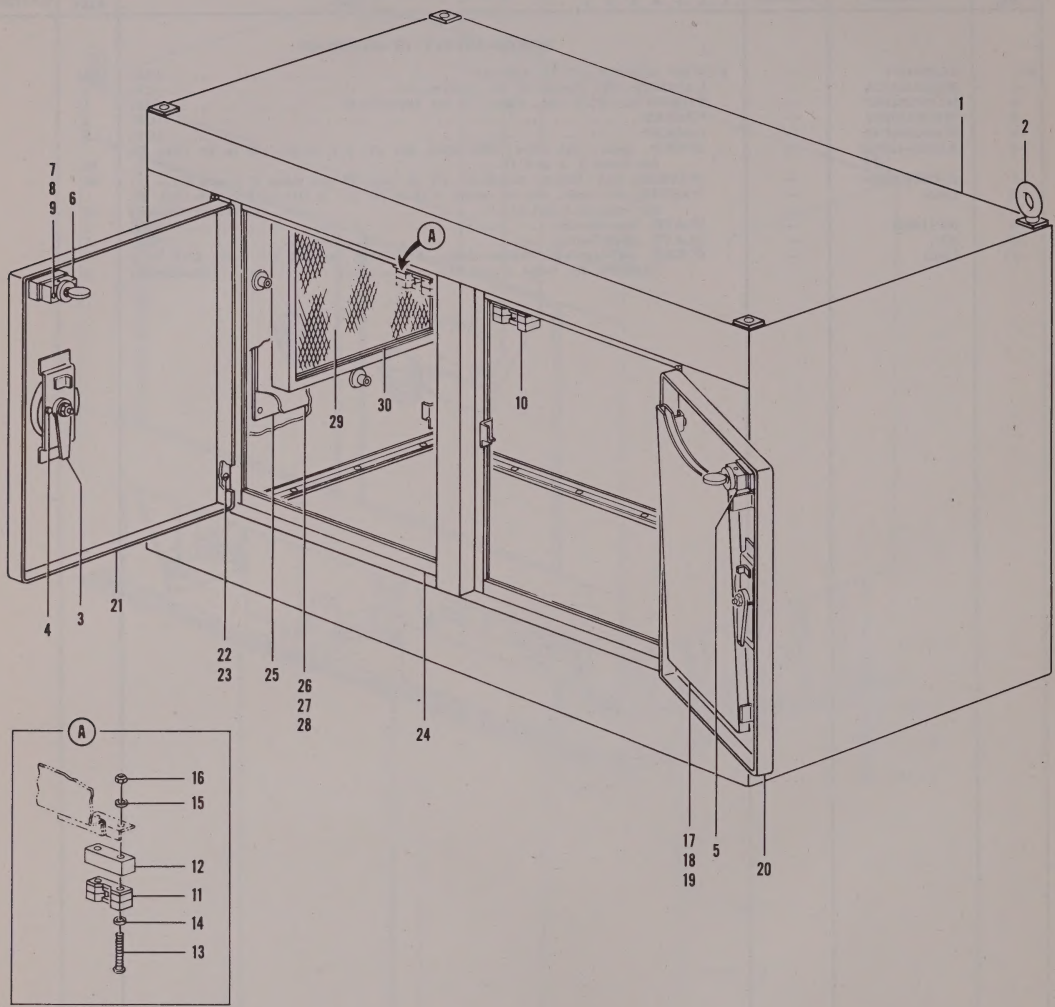

Figure 84. Cabinet

FIG. & INDEX NO.	PART NUMBER	REF SYMBOL	NOMENCLATURE 1 2 3 4 5 6 7	UNITS PER ASSY	APPLI-CATION
			CABINET		
84–	ML9524504G1	—	. CABINET (See Figure 83–1 for next higher assembly).....(GE)	Ref	
–1	No Number	—	. . RACK (T9524504P24, P25, P26, P27, P29, P30, P31, P32, P33, P44, P50, P61, P62 and P63, assembled).....(GE)	1	
–2	P512305P15	—	. . SCREW, eye .....(GE)	4	
–3	M7483488P1	—	. . HANDLE	2	
–4	AN507–1024–5	—	. . SCREW, mach: slot drive; FH; steel, cad pl; No. 10–24; 5/16 in lg (Att. Pt.)	4	
–5	ML7460330G5	S10401B	. . SWITCH, interlock	1	
–6	ML7460330G5	S10402B	. . SWITCH, interlock	1	
–7	AN515–6–20	—	. . SCREW, mach: slot drive; RH; steel, cad pl; No. 6–32; 1-1/4 in lg (Att. Pt. for items 5 and 6).....	4	
–8	AN935B6	—	. . WASHER, lock: bronze, nickel pl; No. 6 (Att. Pt. for items 5 and 6).....	4	
–9	AN960–6L	—	. . WASHER, flat: steel, cad pl; No. 6 (Att. Pt. for items 5 and 6).....	4	
–10	ML7460330G2	S10401A	. . SWITCH, interlock	1	
–11	ML7460330G2	S10402A	. . SWITCH, interlock	1	
–12	V9260367P21	—	. . INSULATOR, standoff .....(GE)	2	
–13	AN515–6–28	—	. . SCREW, mach: slot drive; RH; steel, cad pl; No. 6–32; 1-3/4 in lg (Att. Pt. for items 10, 11 and 12).....	4	
–14	AN960–6L	—	. . WASHER, flat: steel, cad pl; No. 6 (Att. Pt. for items 10, 11 and 12).....	4	
–15	AN960–8L	—	. . WASHER, flat: steel, cad pl; No. 8 (Att. Pt. for items 10, 11 and 12).....	4	
–16	Coml	—	. . NUT, lock: elastic stop nut type; steel, cad pl; No. 6–32 (Att. Pt. for items 10, 11 and 12).....(Esna)	4	
–17	T9524504P45	—	. . CONTAINER .....(GE)	1	
–18	Coml	—	. . SCREW, mach: slot drive; RH; steel, cad pl; 1/4 in–20; 1/4 in lg (Att. Pt.) .....(Amer Screw)	4	
–19	AN935B416	—	. . WASHER, lock: bronze, nickel pl; 1/4 in (Att. Pt.).....	4	
–20	T9524504P34	—	. . DOOR .....(GE)	1	
–21	T9524504P41	—	. . DOOR .....(GE)	1	
–22	AN515–10–6	—	. . SCREW, mach: slot drive; RH; steel, cad pl; No. 10–24; 3/8 in lg (Att. Pt. for items 20 and 21).....	8	
–23	Coml	—	. . NUT, lock: elastic stop nut type; steel, cad pl; No. 10–24 (Att. Pt. for items 20 and 21) .....(Esna)	8	
–24	T9524504P60	—	. . GASKET .....(GE)	8	
–25	T9524504P22	—	. . LOUVERS .....(GE)	1	
–26	T9524504P23	—	. . GASKET .....(GE)	1	
–27	AN515–416–8	—	. . SCREW, mach: slot drive; RH; steel, cad pl; 1/4 in–20; 1/2 in lg (Att. Pt. for items 25 and 26).....	8	
–28	AN935B416	—	. . WASHER, lock: bronze, nickel pl; 1/4 in (Att. Pt. for items 25 and 26)..	8	
–29	P1A	—	. . CLEANER, air .....(Air-Maze)	1	
–30	T9524504P28	—	. . GASKET .....(GE)	1	

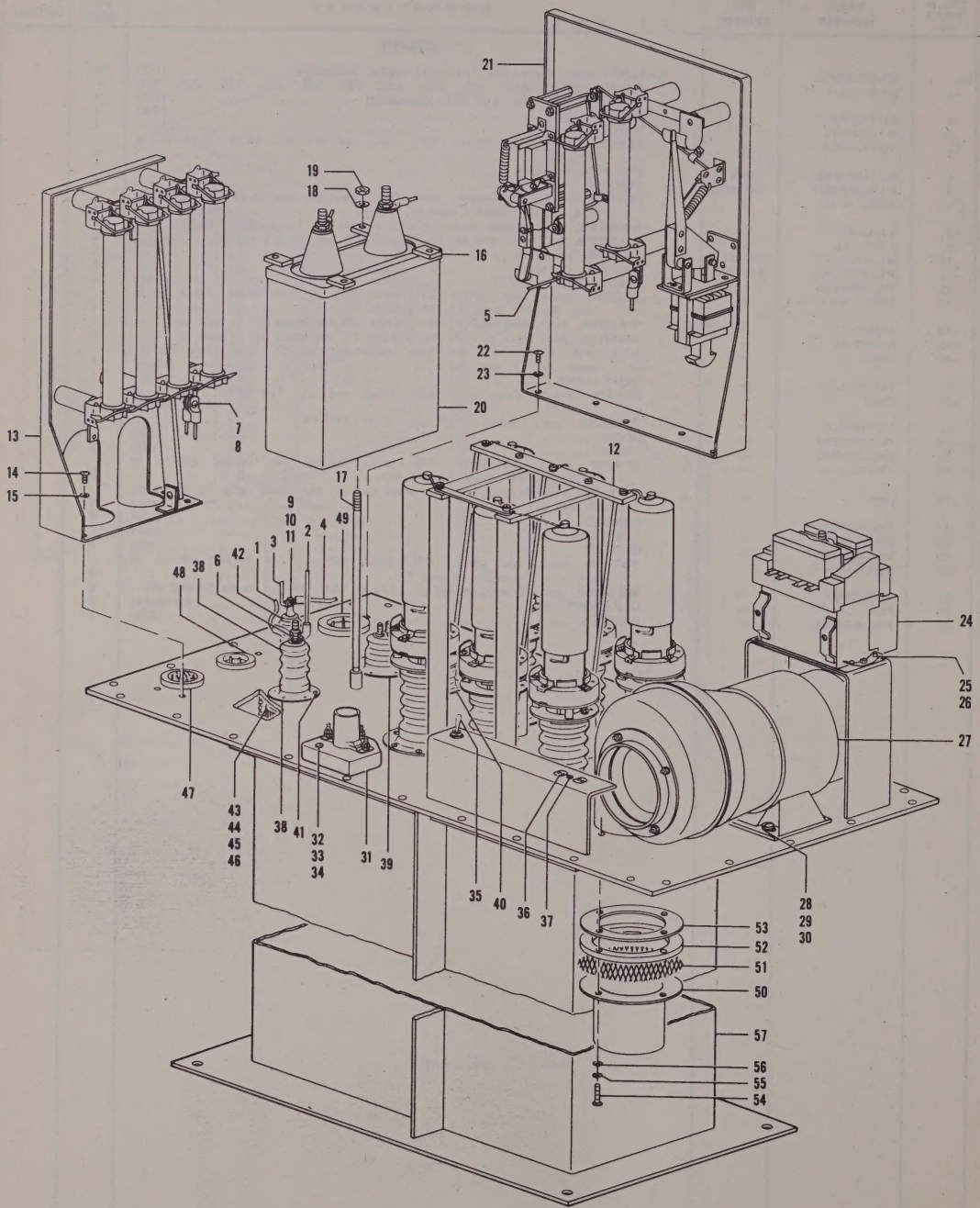

Figure 85. Power Supply

FIG. & INDEX NO.	PART NUMBER	REF SYMBOL	NOMENCLATURE 1 2 3 4 5 6 7	UNITS PER ASSY	APPLI-CATION
			POWER SUPPLY		
85–	ML9502850G1	—	. POWER SUPPLY (See Figure 83–2 for next higher assembly).....(GE)	Ref	
–1	ML9535613–402	—	. . LEAD, electrical .....(GE)	1	
–2	ML9535613–401	—	. . LEAD, electrical .....(GE)	1	
–3	ML9535613–403	—	. . LEAD, electrical .....(GE)	1	
–4	ML9535613–404	—	. . LEAD, electrical .....(GE)	1	
–5	ML9535613–405	—	. . LEAD, electrical .....(GE)	1	
–6	AN340–616	—	. . NUT, hex: steel, cad pl; 3/8 in–16 (Att. Pt. for items 1 and 2).....	2	
–7	AN515–416–10	—	. . SCREW, mach: slot drive; RH; steel, cad pl; 1/4 in–20; 5/8 in lg (Att. Pt. for items 1, 3, 4 and 5).....(Amer Screw)	3	
–8	Coml	—	. . NUT, lock: elastic stop nut type; steel, cad pl; 1/4 in–20 (Att. Pt. for items 1, 3, 4 and 5).....(Esna)	3	
–9	AN515–5–8	—	. . SCREW, mach: slot drive; RH; steel, cad pl; No. 5–40; 1/2 in lg (Att. Pt. for items 3 and 4).....	1	
–10	Coml	—	. . WASHER, flat: steel, cad pl; No. 5 (Att. Pt. for items 3 and 4).....	1	
–11	AN935B5	—	. . WASHER, lock: bronze, nickel pl (Att. Pt. for items 3 and 4).....	1	
–12	No Number	—	. . TUBE ASSEMBLY (See Figure 86 for breakdown).....	1	
–13	ML9535610G1	—	. . RESISTOR SUBASSEMBLY, fixed (See Figure 87 for breakdown).....(GE)	1	
–14	AN515–416–8	—	. . SCREW, mach: slot drive; RH; steel, cad pl; 1/4 in–20; 1/2 in lg (Att. Pt.)	4	
–15	AN935B416	—	. . WASHER, lock: bronze, nickel pl; 1/4 in (Att. Pt.).....	4	
–16	K9802759–P21	—	. . CLAMP .....(GE)	1	
–17	Coml	—	. . STUD: steel, cad pl; 10 in lg x 5/16 in diam overall; ends threaded 1–3/8 in lg w/ 5/16 in–18 thd (Att. Pt.).....(Amer Screw)	4	
–18	AN935B516	—	. . WASHER, lock: bronze, nickel pl; 5/16 in (Att. Pt.).....	4	
–19	AN340–516	—	. . NUT, hex: steel, cad pl; 5/16 in–18 (Att. Pt.).....	4	
–20	14F396	C10401	. . CAPACITOR, fixed .....(GE)	1	
–21	ML9535607G1	—	. . RELAY-RESISTOR SUBASSEMBLY (See Figure 88 for breakdown)...(GE)	1	
–22	AN515–416–8	—	. . SCREW, mach: slot drive; RH; steel, cad pl; 1/4 in–20; 1/2 in lg (Att. Pt.)	5	
–23	AN935B416	—	. . WASHER, lock: bronze, nickel pl; 1/4 in (Att. Pt.).....	5	
–24	CR5181–2R26	K10401	. . RELAY, solenoid .....(GE)	1	
–25	AN515–416–6	—	. . SCREW, mach: slot drive; RH; steel, cad pl; 1/4 in–20; 3/8 in lg (Att. Pt.)	4	
–26	AN935B416	—	. . WASHER, lock: bronze, nickel pl; 1/4 in (Att. Pt.).....	4	
–27	P7700708P1	B10401	. . BLOWER (See Figure 54 for breakdown).....	1	
–28	AN515–516–8	—	. . SCREW, mach: slot drive; RH; steel, cad pl; 5/16 in–18; 1/2 in lg (Att. Pt.)	4	
–29	AN935B516	—	. . WASHER, lock: bronze, nickel pl; 5/16 in (Att. Pt.).....	4	
–30	AN960–516L	—	. . WASHER, flat: steel, cad pl; 5/16 in (Att. Pt.).....	4	
–31	SA57–2106	E10401	. . ARRESTER, electrical surge .....(Auto Elec)	1	
–32	AN515–10–20	—	. . SCREW, mach: slot drive; RH; steel, cad pl; No. 10–24; 1-1/4 in lg (Att. Pt.)	2	
–33	AN960–10L	—	. . WASHER, flat: steel, cad pl; No. 10 (Att. Pt.).....	2	
–34	AN935B10	—	. . WASHER, lock: bronze, nickel pl; No. 10 (Att. Pt.).....	2	
–35	ST22N	S10403	. . SWITCH, toggle	1	
–36	2679	—	. . CONNECTOR ASSEMBLY .....(GE)	1	
–37	AN515–6–6	—	. . SCREW, mach: slot drive; FH; steel, cad pl; No. 6–32; 3/8 in lg (Att. Pt.)	1	
–38	14B812	—	. . INSULATOR, standoff .....(GE)	1	
–39	14B858	—	. . INSULATOR, standoff .....(GE)	1	
–40	14B856	—	. . INSULATOR, standoff .....(GE)	1	
–41	AN515–4–4	—	. . SCREW, mach: slot drive; RH; steel, cad pl; No. 4–40; 1/4 in lg (Att. Pt. for items 38, 39 and 40).....	16	
–42	UG37A/U	J10402	. . CONNECTOR, receptacle	1	
–43	A927–1	—	. . CAP AND CHAIN SUBASSEMBLY .....(Diamond Inst)	1	
–44	AN515–10–10	—	. . SCREW, mach: slot drive; RH; steel, cad pl; No. 10–24; 5/8 in lg (Att. Pt. for items 42 and 43).....	6	
–45	AN960–10L	—	. . WASHER, flat: steel, cad pl; No. 10 (Att. Pt. for items 42 and 43).....	6	
–46	AN935B10	—	. . WASHER, lock: bronze, nickel pl; No. 10 (Att. Pt. for items 42 and 43)...	6	
–47	C1128	J10401	. . CONNECTOR, receptacle .....(Buggie)	1	
–48	C1151	J10404	. . CONNECTOR, receptacle .....(Buggie)	1	
–49	C1130	J10403	. . CONNECTOR, receptacle .....(Buggie)	1	
–50	T9524508P25	—	. . VENTILATOR .....(GE)	1	
–51	T9524508P27	—	. . CLOTH, wire .....(GE)	1	
–52	T9524508P26	—	. . PLATE, spacer .....(GE)	1	
–53	T9524508P28	—	. . GASKET .....(GE)	1	
–54	AN515–416–14	—	. . SCREW, mach: slot drive; RH; steel, cad pl; 1/4 in–20; 7/8 in lg (Att. Pt. for items 50 thru 53).....	4	
–55	AN935B416	—	. . WASHER, lock: bronze, nickel pl; 1/4 in (Att. Pt. for items 50 thru 53)...	4	
–56	AN960–416L	—	. . WASHER, flat: steel, cad pl; 1/4 in (Att. Pt. for items 50 thru 53).....	4	
–57	No Number	—	. . TRANSFORMER SUBASSEMBLY (See Figure 89 for breakdown).....	1	

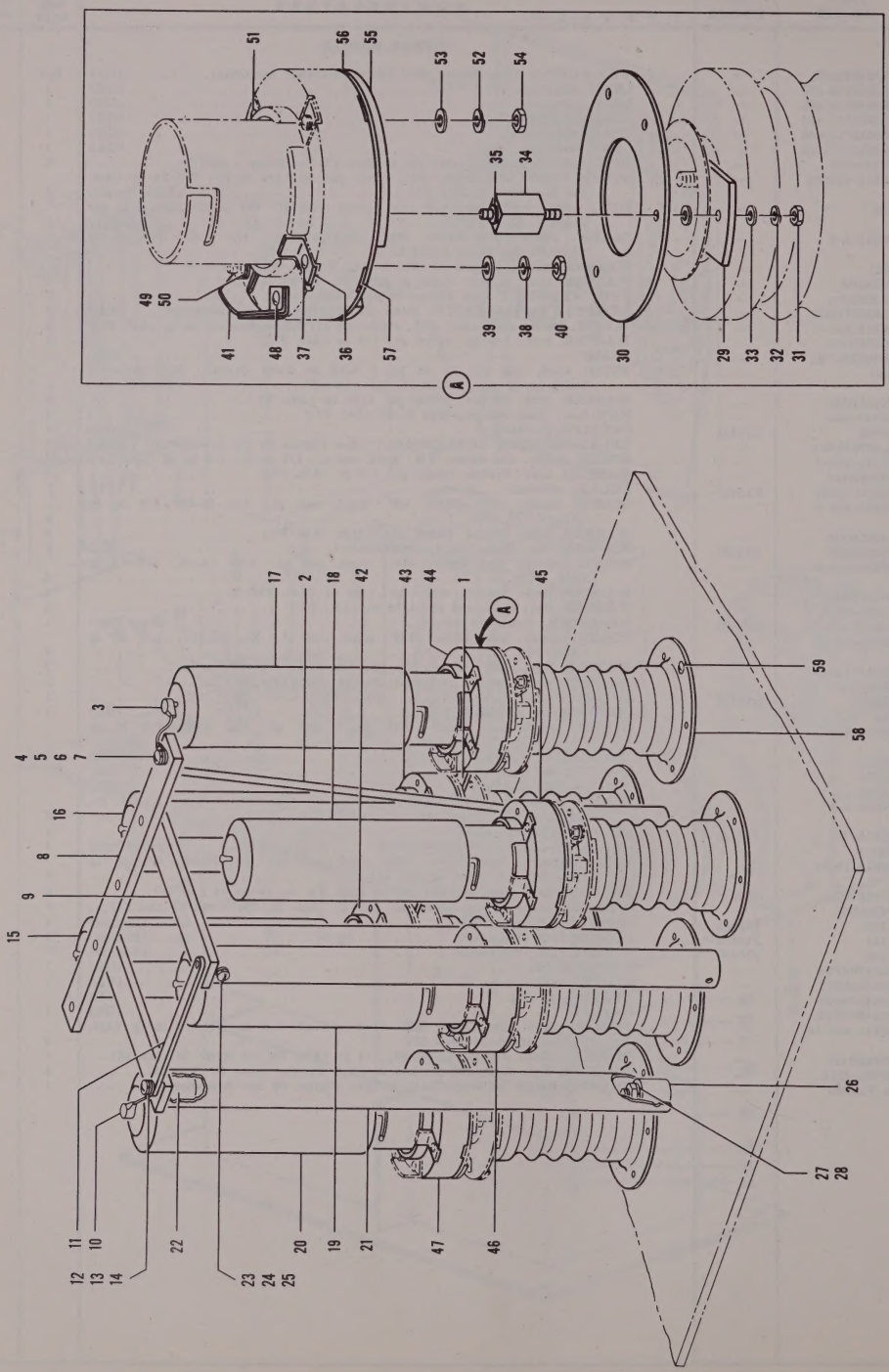

Figure 86. Tube Assembly

FIG. & INDEX NO.	PART NUMBER	REF SYMBOL	NOMENCLATURE 1 2 3 4 5 6 7	UNITS PER ASSY	APPLI-CATION
			TUBE ASSEMBLY		
86–	No Number	—	. . TUBE ASSEMBLY (See Figure 85–12 for next higher assembly)	Ref	
–1	P9535617P23	—	. . . BAR, bus (GE)	1	
–2	P9535617P25	—	. . . ROD, connecting (GE)	3	
–3	K9254350G7	—	. . . LEAD, electrical (GE)	3	
–4	AN515–10–10	—	. . . SCREW, mach: slot drive; RH; steel, cad pl; No. 10–24; 5/8 in lg (Att. Pt. for items 2 and 3)	3	
–5	AN935B10	—	. . . WASHER, lock: bronze, nickel pl; No. 10 (Att. Pt. for items 2 and 3)	3	
–6	AN960–10L	—	. . . WASHER, flat: steel, cad pl; No. 10 (Att. Pt. for items 2 and 3)	3	
–7	AN340–10	—	. . . NUT, hex: steel, cad pl; No. 10–24 (Att. Pt. for items 2 and 3)	3	
–8	P9535617P26	—	. . . INSULATOR, plate (GE)	1	
–9	P9535617P27	—	. . . INSULATOR, plate (GE)	2	
–10	K9254350G7	—	. . . LEAD, electrical (GE)	3	
–11	P9535617P24	—	. . . BAR, connecting (GE)	1	
–12	AN515–10–16	—	. . . SCREW, mach: slot drive; RH; steel, cad pl; No. 10–24; 1 in lg (Att. Pt. for items 8 thru 11)	4	
–13	AN935B10	—	. . . WASHER, lock: bronze, nickel pl; No. 10 (Att. Pt. for items 8 thru 11)	4	
–14	AN960–10L	—	. . . WASHER, flat: steel, cad pl; No. 10 (Att. Pt. for items 8 thru 11)	4	
–15	371B	V10401	. . . TUBE, electron	1	
–16	371B	V10402	. . . TUBE, electron	1	
–17	371B	V10403	. . . TUBE, electron	1	
–18	371B	V10404	. . . TUBE, electron	1	
–19	371B	V10405	. . . TUBE, electron	1	
–20	371B	V10406	. . . TUBE, electron	1	
–21	P9535617P22	—	. . . POST, supporting (GE)	4	
–22	P9535617P28	—	. . . POST, anchor (GE)	4	
–23	AN515–8–6	—	. . . SCREW, mach: slot drive; RH; steel, cad pl; No. 8–32; 3/8 in lg (Att. Pt. for items 21 and 22)	16	
–24	AN935B8	—	. . . WASHER, lock: bronze, nickel pl; No. 8 (Att. Pt. for items 21 and 22)	16	
–25	AN960–8L	—	. . . WASHER, flat: cad pl; No. 8 (Att. Pt. for items 21 and 22)	16	
–26	P9535617P29	—	. . . POST, anchor (GE)	4	
–27	AN340–416	—	. . . NUT, hex: steel, cad pl; 1/4 in–20 (Att. Pt.)	4	
–28	AN935B416	—	. . . WASHER, lock: bronze, nickel pl; 1/4 in (Att. Pt.)	4	
	ML9219911G1	—	. . . RETAINER, tube (GE)	6	
–29	M9219911P25	—	. . . . PLATE, retainer (GE)	3	
–30	M9219911P24	—	. . . . DISK, mounting (GE)	1	
–31	AN340–8	—	. . . . NUT, hex: steel, cad pl; No. 8–32 (Att. Pt. for items 29 and 30)	3	
–32	AN935–8	—	. . . . WASHER, lock: steel, cad pl; No. 8 (Att. Pt. for items 29 and 30)	3	
–33	AN960–8L	—	. . . . WASHER, flat: steel, cad pl; No. 8 (Att. Pt. for items 29 and 30)	6	
–34	A321	—	. . . . MOUNT, vibration (U S Rubber)	3	
–35	AN960–8L	—	. . . . WASHER, flat: steel, cad pl; No. 8 (Att. Pt.)	3	
–36	V8381266P21	—	. . . . CLIP (GE)	1	
–37	AN520–10–16	—	. . . . SCREW, mach: slot drive; RH; steel, cad pl; No. 10–32; 1 in lg (Att. Pt.)	1	
–38	AN935–10	—	. . . . WASHER, lock: steel, cad pl; No. 10 (Att. Pt.)	1	
–39	AN960–10L	—	. . . . WASHER, flat: steel, cad pl; No. 10 (Att. Pt.)	1	
–40	AN345–10	—	. . . . NUT, hex: steel, cad pl; No. 10–32 (Att. Pt.)	1	
–41	M9219911P30	—	. . . . BRACKET (GE)	1	
–42	211	XV10401	. . . . SOCKET, tube (Johnson EF)	1	
–43	211	XV10402	. . . . SOCKET, tube (Johnson EF)	1	
–44	211	XV10403	. . . . SOCKET, tube (Johnson EF)	1	
–45	211	XV10404	. . . . SOCKET, tube (Johnson EF)	1	
–46	211	XV10405	. . . . SOCKET, tube (Johnson EF)	1	
–47	211	XV10406	. . . . SOCKET, tube (Johnson EF)	1	
–48	AN520–10–16	—	. . . . SCREW, mach: slot drive; RH; steel, cad pl; No. 10–32; 1 in lg (Att. Pt. for items 41 thru 47)	1	
–49	AN935–10	—	. . . . WASHER, lock: steel, cad pl; No. 10 (Att. Pt. for items 41 thru 47)	1	
–50	AN960–10L	—	. . . . WASHER, flat: steel, cad pl; No. 10 (Att. Pt. for items 41 thru 47)	1	
–51	AN520–10–20	—	. . . . SCREW, mach: slot drive; RH; steel, cad pl; No. 10–32; 1-1/4 in lg (Att. Pt. for items 42 thru 47)	1	
–52	AN935–10	—	. . . . WASHER, lock: steel, cad pl; No. 10 (Att. Pt. for items 42 thru 47)	1	
–53	AN960–10L	—	. . . . WASHER, flat: steel, cad pl; No. 10 (Att. Pt. for items 42 thru 47)	1	
–54	AN345–10	—	. . . . NUT, hex: steel, cad pl; No. 10–32 (Att. Pt. for items 42 thru 47)	1	
–55	M9219911P22	—	. . . . PLATE, mounting (GE)	1	
–56	M9219911P23	—	. . . . INSULATOR, disk (GE)	1	
–57	Coml	—	. . . . WASHER, flat: fibre; round, 7/32 in ID, 7/16 in OD, 0.035 in thk (Wrought Washer)	2	
–58	14B828	—	. . . INSULATOR, standoff (GE)	6	
–59	AN515–6–4	—	. . . SCREW, mach: slot drive; RH; steel, cad pl; No. 6–32; 1/4 in lg (Att. Pt.)	86	

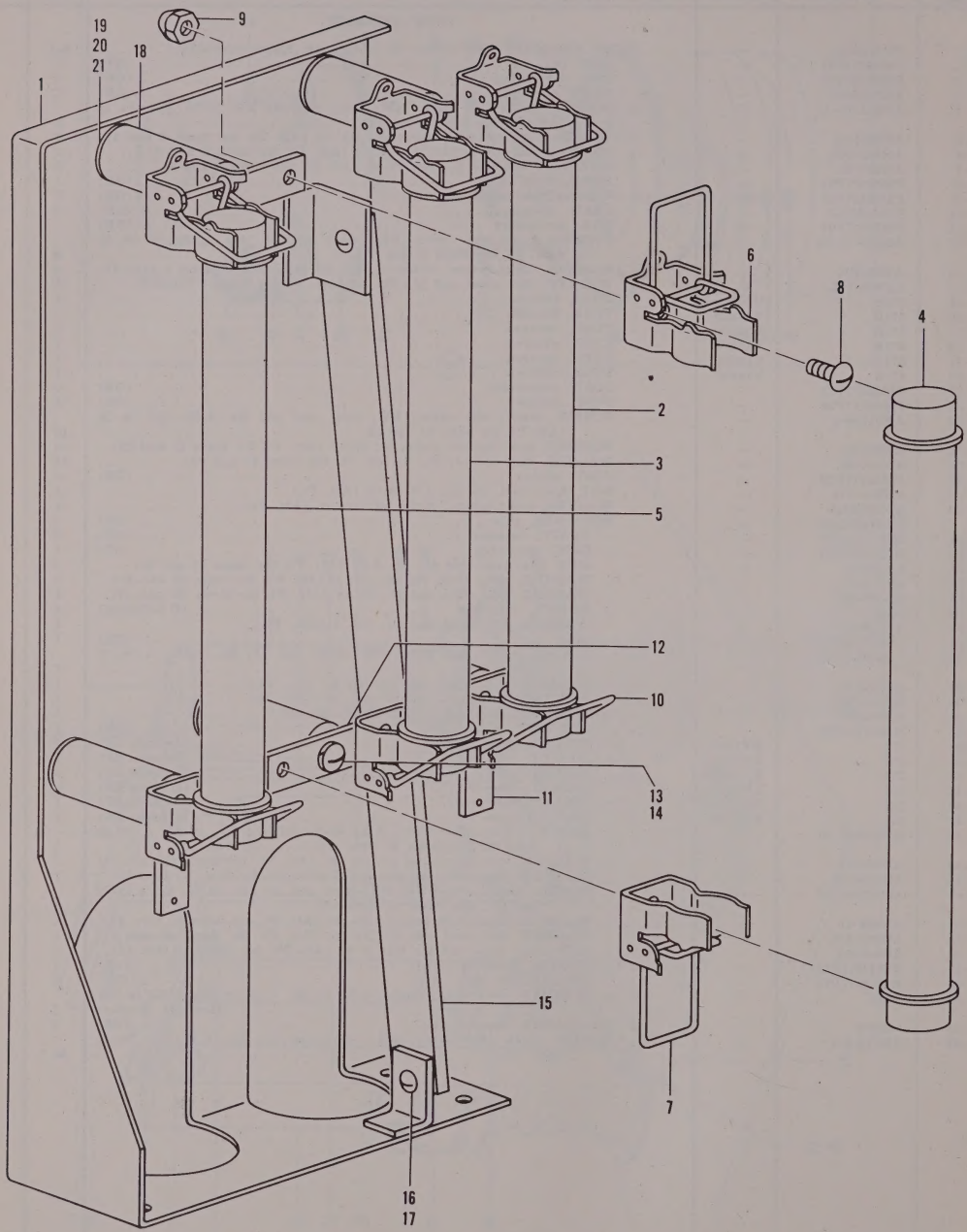

Figure 87. Resistor Subassembly

FIG. & INDEX NO.	PART NUMBER	REF SYMBOL	1 2 3 4 5 6 7 NOMENCLATURE	UNITS PER ASSY	APPLI-CATION
			RESISTOR SUBASSEMBLY		
87–	ML9535610G1	—	. . RESISTOR SUBASSEMBLY, fixed (See Figure 85–13 for next higher assembly) ..... (GE)	Ref	
–1	P9535610P22	—	. . . MOUNTING, bracket ..... (GE)	1	
–2	MFA505	R10401	. . . RESISTOR, fixed	1	
–3	MFA505	R10402	. . . RESISTOR, fixed	1	
–4	MFA505	R10403	. . . RESISTOR, fixed	1	
–5	MFA505	R10404	. . . RESISTOR, fixed	1	
–6	K17–7A	—	. . . CLIP ..... (Trumbull)	4	
–7	K17–8A	—	. . . CLIP ..... (Trumbull)	2	
–8	AN515–416–10	—	. . . SCREW, mach: slot drive; RH; steel, cad pl; 1/4 in–20; 5/8 in lg (Att. Pt. for items 6 and 7)	6	
–9	Coml	—	. . . NUT, lock: elastic stop nut type; steel, cad pl; 1/4 in–20 (Att. Pt. for items 6 and 7) ..... (Esna)	6	
–10	K17–8A	—	. . . CLIP ..... (Trumbull)	2	
–11	P9535610P37	—	. . . BAR, bus ..... (GE)	2	
–12	P9535610P34	—	. . . BAR, bus ..... (GE)	3	
–13	AN515–416–10	—	. . . SCREW, mach: slot drive; RH; steel, cad pl; 1/4 in–20; 5/8 in lg (Att. Pt. for items 10, 11 and 12)	5	
–14	AN935B416	—	. . . WASHER, lock: bronze, nickel pl; 1/4 in (Att. Pt. for items 10, 11 and 12)	5	
–15	P9535610P36	—	. . . PLATE, reinforcing ..... (GE)	1	
–16	AN515–416–14	—	. . . SCREW, mach: slot drive; RH; steel, cad pl; 1/4 in–20; 7/8 in lg (Att. Pt.)	2	
–17	Coml	—	. . . NUT, lock: elastic stop nut type; steel, cad pl; 1/4 in–20 (Att. Pt.) . (Esna)	2	
–18	K7106956P4	—	. . . INSULATOR, standoff	5	
–19	Coml	—	. . . WASHER, flat: pressed board, varnished; round, 9/32 in ID, 1 in OD, 1/16 in thk ..... (Wrought Washer)	5	
–20	AN515–416–10	—	. . . SCREW, mach: slot drive; RH; steel, cad pl; 1/4 in–20; 5/8 in lg (Att. Pt. for items 18 and 19)	5	
–21	AN935B416	—	. . . WASHER, lock: bronze, tinned; 1/4 in (Att. Pt. for items 18 and 19) ...	5	

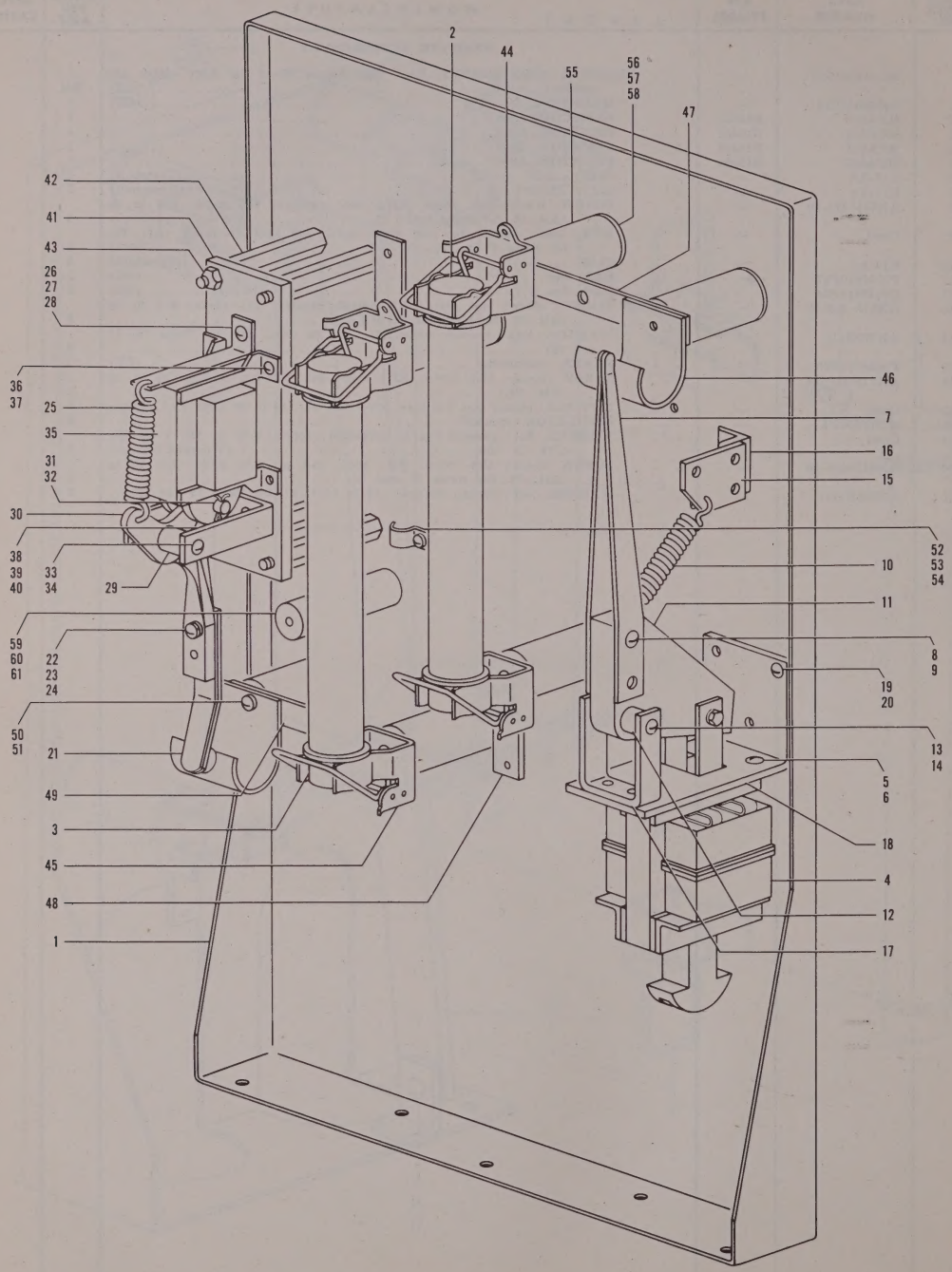

Figure 88. Relay-Resistor Subassembly

FIG. & INDEX NO.	PART NUMBER	REF SYMBOL	1 2 3 4 5 6 7 NOMENCLATURE	UNITS PER ASSY	APPLI-CATION
			RELAY–RESISTOR SUBASSEMBLY		
88–	ML9535607G1	—	. . RELAY-RESISTOR SUBASSEMBLY (See Figure 85–21 for next higher assembly) ....(GE)	Ref	
–1	P9535607P22	—	. . . MOUNTING, bracket ....(GE)	1	
–2	M7472342P21	R10405	. . . RESISTOR, fixed	1	
–3	M7472342P40	R10406	. . . RESISTOR, fixed	1	
–4	K9217664P21	K10402	. . . SOLENOID ....(GE)	1	
–5	AN515–10–10	—	. . . SCREW, mach: slot drive; RH; steel, cad pl; No. 10–24; 5/8 in lg (Att. Pt.)	4	
–6	Coml	—	. . . NUT, lock: elastic stop nut type; steel, cad pl; No. 10–24 (Att. Pt.). (Esna)	4	
–7	T8309745P64	—	. . . ARM ASSEMBLY	1	
–8	AN515–416–20	—	. . . SCREW, mach: slot drive; RH; steel, cad pl; 1/4 in–20; 1-1/4 in lg (Att. Pt.)	2	
–9	Coml	—	. . . NUT, lock: elastic stop nut type; steel, cad pl; 1/4 in–20 (Att. Pt.). (Esna)	2	
–10	K8385629P21	—	. . . SPRING ....(GE)	1	
–11	T8309745P60	—	. . . LINK, lever ....(GE)	1	
–12	T8309745P62	—	. . . BEARING, sleeve ....(GE)	1	
–13	Coml	—	. . . SCREW, mach: slot drive; RH; steel, cad pl; 1/4 in–20; 1-7/8 in lg (Att. Pt. for items 11 and 12)....(Amer Screw)	1	
–14	Coml	—	. . . NUT, lock: elastic stop nut type; steel, cad pl; 1/4 in–20 (Att. Pt. for items 11 and 12)....(Esna)	1	
–15	T8309745P67	—	. . . PLATE, mounting ....(GE)	1	
–16	T8309745P66	—	. . . BRACKET ....(GE)	1	
–17	T8309745P63	—	. . . PLATE, angle ....(GE)	1	
–18	P9535607P26	—	. . . BRACKET ....(GE)	1	
–19	AN515–10–10	—	. . . SCREW, mach: slot drive; RH; steel, cad pl; No. 10–24; 5/8 in lg (Att. Pt. for items 15 thru 18)....	9	
–20	Coml	—	. . . NUT, lock: elastic stop nut type; steel, cad pl; No. 10–24 (Att. Pt. for items 15 thru 18)....(Esna)	9	
–21	V1569013	—	. . . ARM ....(GE)	1	
–22	AN515–10–6	—	. . . SCREW, mach: slot drive; RH; steel, cad pl; No. 10–24; 3/8 in lg (Att. Pt.)	2	
–23	AN935B10	—	. . . WASHER, lock: bronze, nickel pl; No. 10 (Att. Pt.)....	2	
–24	AN960–10L	—	. . . WASHER, flat: steel, cad pl; No. 10 (Att. Pt.)....	2	
–25	K8385630P21	—	. . . SPRING ....(GE)	1	
–26	K8355626P21	—	. . . BRACKET ....(GE)	1	
–27	AN515–10–14	—	. . . SCREW, mach: slot drive; RH; steel, cad pl; No. 10–24; 7/8 in lg (Att. Pt.)	1	
–28	Coml	—	. . . NUT, lock: elastic stop nut type; steel, cad pl; No. 10–24 (Att. Pt.). (Esna)	1	
–29	P9535607P57	—	. . . BEARING, sleeve ....(GE)	1	
–30	K8355616P21	—	. . . LINK, lever ....(GE)	1	
–31	AN380–2–1	—	. . . PIN, cotter: steel, cad pl; 1/16 in diam x 3/8 in lg (Att. Pt.)....	1	
–32	K8355655P21	—	. . . PIN, clevis (Att. Pt.)....(GE)	1	
–33	Coml	—	. . . SCREW, mach: slot drive; RH; steel, cad pl; No. 10–24; 1-7/8 in lg (Att. Pt. for items 29 and 30)....(Amer Screw)	1	
–34	Coml	—	. . . NUT, lock: elastic stop nut type; steel, cad pl; No. 10–24 (Att. Pt. for items 29 and 30)....(Esna)	1	
–35	5726693AB484	K10403	. . . SOLENOID ....(GE)	1	
–36	AN515–8–10	—	. . . SCREW, mach: slot drive; RH; steel, cad pl; No. 8–32; 5/8 in lg (Att. Pt.)	4	
–37	Coml	—	. . . NUT, lock: elastic stop nut type; steel, cad pl; No. 8–32 (Att. Pt.). (Esna)	4	
–38	T8309745P61	—	. . . BRACKET ....(GE)	1	
–39	AN515–10–14	—	. . . SCREW, mach: slot drive; RH; steel, cad pl; No. 10–24; 7/8 in lg (Att. Pt.)	2	
–40	Coml	—	. . . NUT, lock: elastic stop nut type; steel, cad pl; No. 10–24 (Att. Pt.). (Esna)	2	
–41	T8309745P31	—	. . . PLATE, mounting ....(GE)	1	
–42	Coml	—	. . . STUD: steel, cad pl; 1/2 in hex x 3–1/2 in lg overall; one end threaded 3/8 in lg; other end 1/2 in lg, both w/ 1/4 in–20 thd (Att. Pt.)....(Amer Screw)	4	
–43	Coml	—	. . . NUT, lock: elastic stop nut type; steel, cad pl; 1/4 in-20 (Att. Pt.). (Esna)	8	
–44	M7476539G1	—	. . . CLIP	2	
–45	M7476539G2	—	. . . CLIP	2	
–46	T8309745P28	—	. . . SPRING ....(GE)	2	
–47	P9535607P40	—	. . . BAR, bus ....(GE)	1	
–48	P9535607P41	—	. . . BAR, bus ....(GE)	2	
–49	P9535607P39	—	. . . BAR, bus ....(GE)	1	
–50	AN515–416–10	—	. . . SCREW, mach: slot drive; RH; steel, cad pl; 1/4 in–20; 5/8 in lg (Att. Pt. for items 44 thru 49)....	6	
–51	AN935B416	—	. . . WASHER, lock: bronze, nickel pl; 1/4 in (Att. Pt. for items 44 thru 49)	6	
–52	K7878740	—	. . . CLAMP	4	
–53	AN515–8–4	—	. . . SCREW, mach: slot drive; RH; steel, cad pl; No. 8–32; 1/4 in lg (Att. Pt.)	4	
–54	AN935B8	—	. . . WASHER, lock: bronze, nickel pl; No. 8 (Att. Pt.)....	4	
–55	K7106956P4	—	. . . INSULATOR, standoff	6	
–56	Coml	—	. . . WASHER, flat: pressed board, varnished; round, 9/32 in ID, 1 in OD, 1/16 in thk....(Wrought Washer)	6	
–57	AN515–416–10	—	. . . SCREW, mach: slot drive; RH; steel, cad pl; 1/4 in–20; 5/8 in lg (Att. Pt. for items 55 and 56)....	6	
–58	AN935B416	—	. . . WASHER, lock: bronze, nickel pl; 1/4 in (Att. Pt. for items 55 and 56)..	6	
–59	K7106955P3	—	. . . INSULATOR, standoff	1	
–60	AN515–10–10	—	. . . SCREW, mach: slot drive; RH; steel, cad pl; No. 10–24; 5/8 in lg (Att. Pt.)	1	
–61	AN935B10	—	. . . WASHER, lock: bronze, nickel pl; No. 10 (Att. Pt.)....	1	

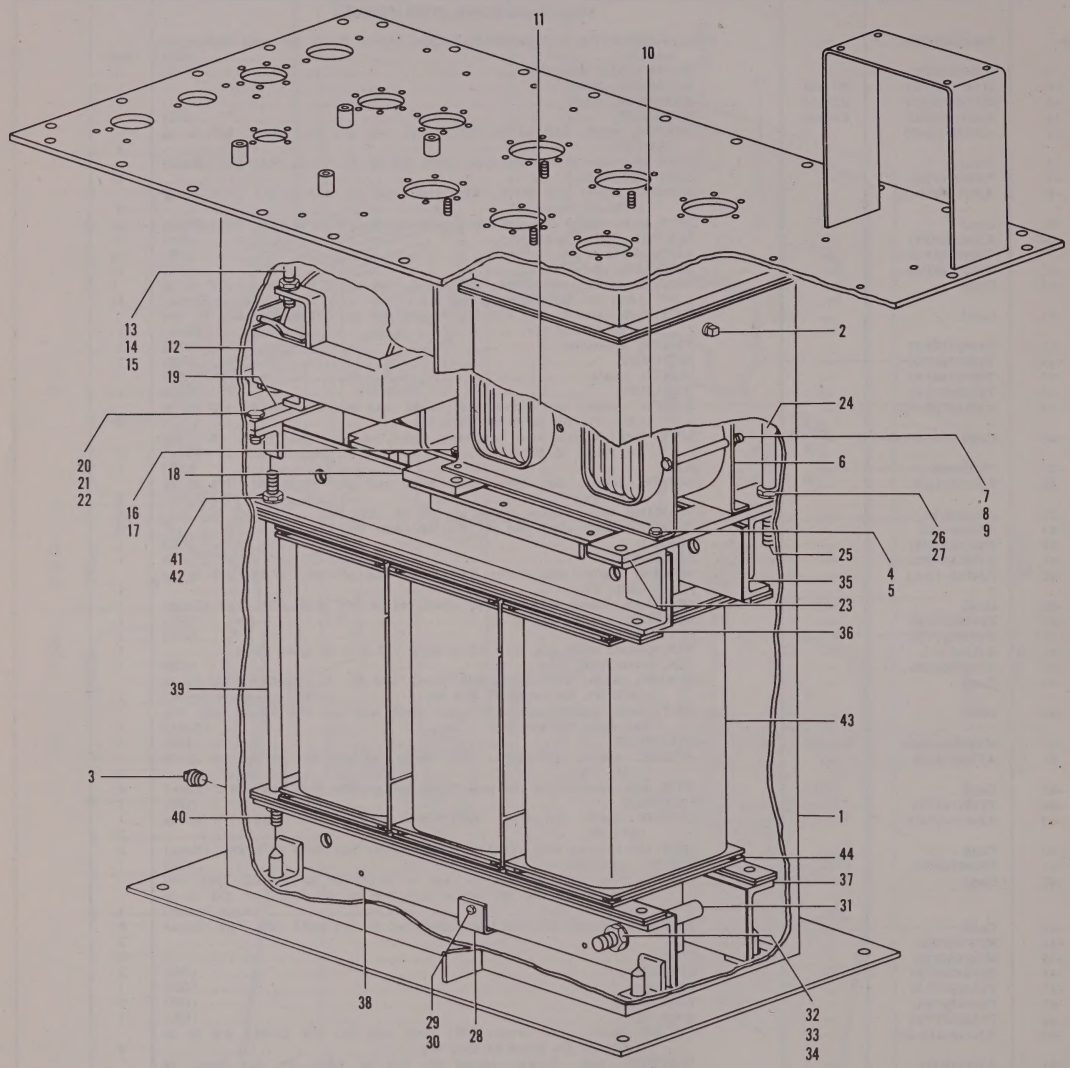

Figure 89. Transformer Subassembly

FIG. & INDEX NO.	PART NUMBER	REF SYMBOL	1 2 3 4 5 6 7 NOMENCLATURE	UNITS PER ASSY	APPLI-CATION
			TRANSFORMER SUBASSEMBLY		
89–	No Number	—	. . TRANSFORMER SUBASSEMBLY (See Figure 85–57 for next higher assembly) ....(GE)	Ref	
–1	No Number	—	. . . CABINET AND COVER SUBASSEMBLY (DL9268574P25 and P26 assembled) ....(GE)	1	
–2	M9544562P26	—	. . . PLUG, machine thread ....(GE)	2	
–3	M9544562P27	—	. . . PLUG, machine thread ....(GE)	1	
	ML9535197G1	—	. . . TRANSFORMER ASSEMBLY, power ....(GE)	1	
–4	Coml	—	. . . SCREW, mach: hex head; steel, cad pl; 5/16 in–18; 1/2 in lg (Att. Pt.) ....(Amer Screw)	4	
–5	AN935–516	—	. . . WASHER, lock: steel, cad pl; 5/16 in (Att. Pt.)....	4	
–6	K9802745P21	—	. . . . CLAMP ....(GE)	2	
–7	Coml	—	. . . . SCREW, mach: hex head; steel, cad pl; 3/8 in–16; 3-3/4 in lg (Att. Pt.) ....(Amer Screw)	2	
–8	AN935–616	—	. . . . WASHER, lock: steel, cad pl; 3/8 in (Att. Pt.)....	2	
–9	AN340–616	—	. . . . NUT, hex: steel, cad pl; 3/8 in–16 (Att. Pt.)....	2	
–10	P9535197P22	T10402	. . . . TRANSFORMER, power ....(GE)	1	
–11	P9535197P23	T10403	. . . . TRANSFORMER, power ....(GE)	1	
–12	M9544564P21	L10401	. . . REACTOR ....(GE)	1	
–13	Coml	—	. . . STUD: steel; 4-3/4 in lg; both ends threaded 1-3/4 in lg w/ 1/2 in–13 thd (Att. Pt.)....(Amer Screw)	1	
–14	AN935–816	—	. . . WASHER, lock: steel, cad pl; 1/2 in (Att. Pt.)....	3	
–15	AN335–8	—	. . . NUT, hex: steel, cad pl; 1/2 in–13 (Att. Pt.)....	3	
–16	Coml	—	. . . SCREW, mach: hex head; steel, cad pl; 3/8 in–16; 1/2 in lg (Att. Pt.) ....(Amer Screw)	4	
–17	AN935–616	—	. . . WASHER, lock: steel, cad pl; 3/8 in (Att. Pt.)....	4	
–18	T9524520P39	—	. . . PLATE, mounting ....(GE)	1	
–19	T9524520P38	—	. . . PLATE, mounting ....(GE)	1	
–20	Coml	—	. . . SCREW, mach: hex head; steel, cad pl; 3/8 in–16; 1-1/4 in lg (Att. Pt. for items 18 and 19)....(Amer Screw)	4	
–21	AN935–616	—	. . . WASHER, lock: steel, cad pl; 3/8 in (Att. Pt. for items 18 and 19)....	4	
–22	AN340–616	—	. . . NUT, hex: steel, cad pl; 3/8 in–16 (Att. Pt. for item 19)....	2	
–23	T9524520P37	—	. . . PLATE, mounting ....(GE)	1	
–24	T9524520P46	—	. . . POST, spacing ....(GE)	3	
–25	Coml	—	. . . STUD: steel; 11-3/4 in lg; both ends threaded 2-1/2 in lg w/ 1/2 in–13 thd (Att. Pt. for items 23 and 24)....(Amer Screw)	3	
–26	AN935–816	—	. . . WASHER, lock: steel, cad pl; 1/2 in (Att. Pt. for items 23 and 24)....	9	
–27	AN335–8	—	. . . NUT, hex: steel, cad pl; 1/2 in–13 (Att. Pt. for items 23 and 24)....	9	
–28	T9524520P31	—	. . . BRACKET ....(GE)	3	
–29	AN515–416–6	—	. . . SCREW, mach: slot drive; RH; steel, cad pl; 1/4 in–20; 3/8 in lg (Att. Pt.)	6	
–30	AN935B416	—	. . . WASHER, lock: bronze; 1/4 in (Att. Pt.)....	6	
–31	T9524520P41	—	. . . POST, spacing ....(GE)	4	
–32	Coml	—	. . . STUD: steel; 6–3/8 in lg; both ends threaded 1 in lg w/ 5/8 in–11 thd (Att. Pt.)....(Amer Screw)	2	
–33	AN935–1016	—	. . . WASHER, lock: steel, cad pl; 5/8 in (Att. Pt.)....	4	
–34	AN335–10	—	. . . NUT, hex: steel, cad pl; 5/8 in–11 (Att. Pt.)....	4	
–35	T9524520P24	—	. . . CLAMP ....(GE)	1	
–36	T9524520P25	—	. . . CLAMP ....(GE)	1	
–37	T9524520P22	—	. . . CLAMP ....(GE)	1	
–38	T9524520P23	—	. . . CLAMP ....(GE)	1	
–39	T9524520P50	—	. . . POST, spacing ....(GE)	4	
–40	Coml	—	. . . STUD: steel; 14–3/8 in lg; both ends threaded 1 in lg w/ 3/8 in–16 thd (Att. Pt. for items 35 thru 39)....(Amer Screw)	4	
–41	AN935–616	—	. . . WASHER, lock: steel, cad pl; 3/8 in (Att. Pt. for items 35 thru 39)....	8	
–42	AN340–616	—	. . . NUT, hex: steel, cad pl; 3/8 in–16 (Att. Pt. for items 35 thru 39)....	8	
–43	No Number	T10401	. . . TRANSFORMER, power ....(GE)	1	
–44	P9535615G1	—	. . . INSULATOR SET ....(GE)	1	

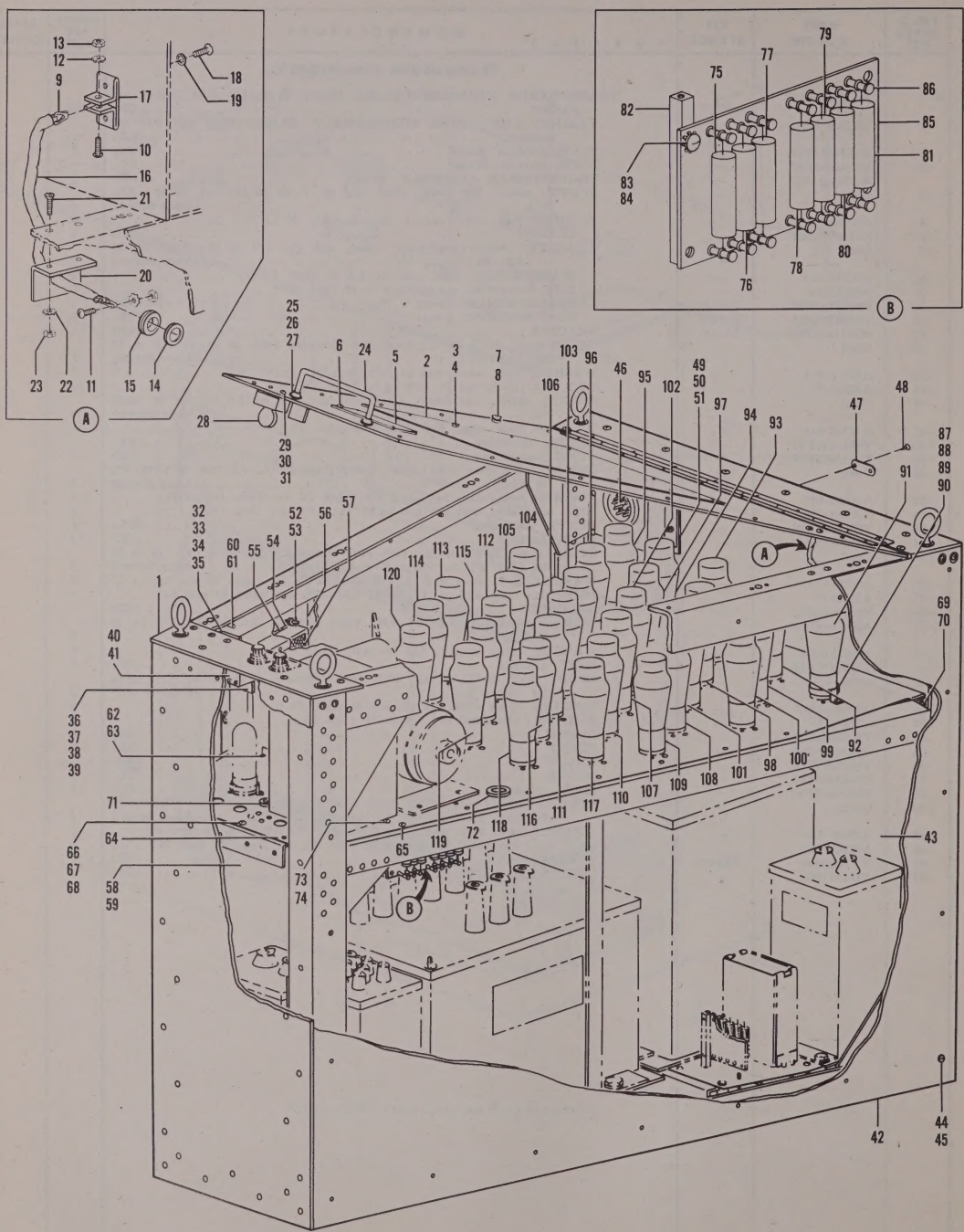

Figure 90. Power Supply PP–415/CPS–6B, Front View (Sheet 1 of 2 sheets, Index Nos. 1 thru 120)

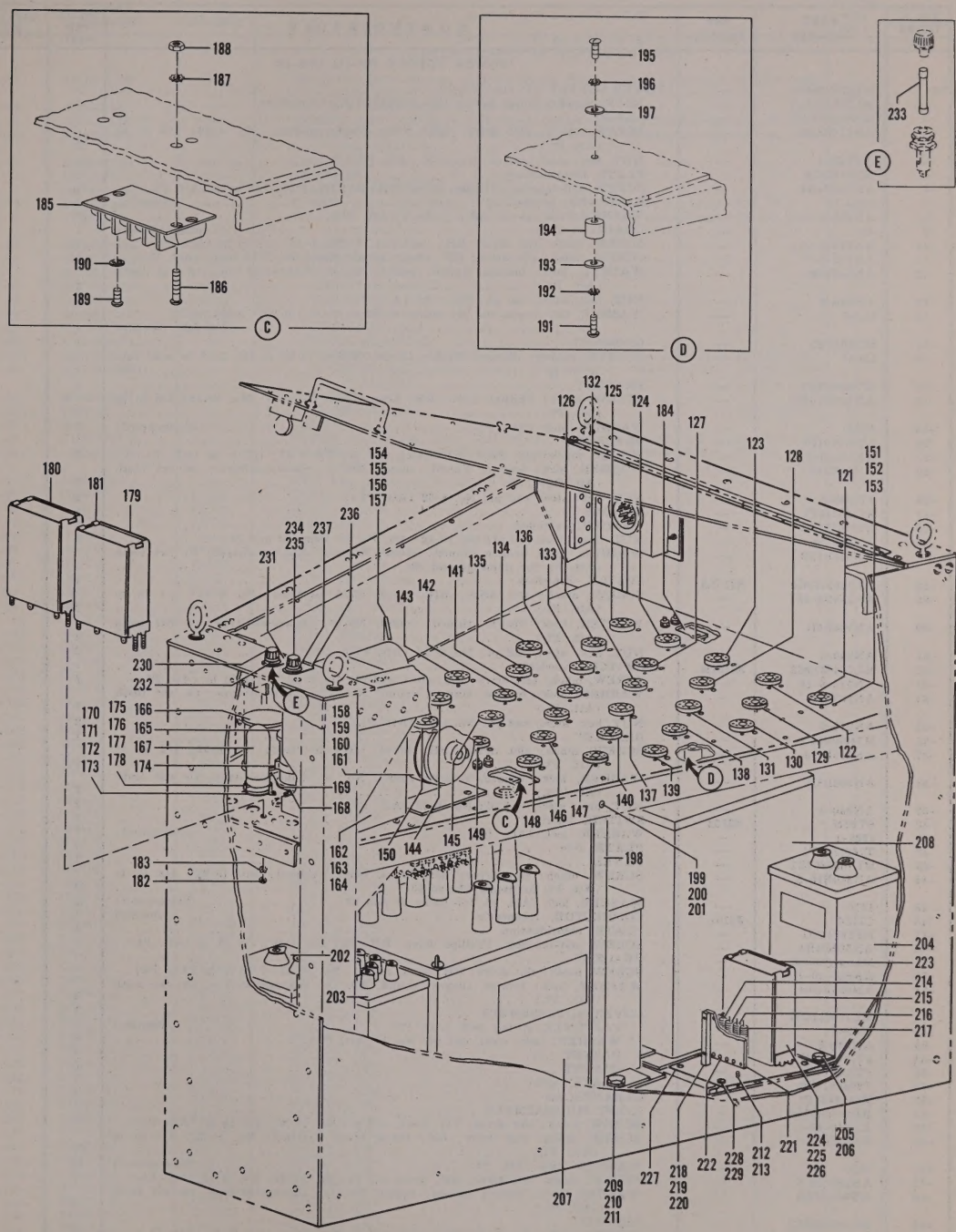

Figure 90. Power Supply PP–415/CPS–6B, Front View (Sheet 2 of 2 sheets, Index Nos. 121 thru 237)

FIG. & INDEX NO.	PART NUMBER	REF SYMBOL	NOMENCLATURE 1 2 3 4 5 6 7	UNITS PER ASSY	APPLI-CATION
			POWER SUPPLY PP–415/CPS–6B		
90–	ML7353056G1	—	POWER SUPPLY PP–415/CPS–6B	1	
–1	ML7354016G1	—	. RACK, rectifier power supply (See Figure 91 for breakdown)	1	
–2	K7004047P19	—	. LABEL	1	
–3	AN515B4–6	—	. SCREW, mach: slot drive; RH; brass, black oxidized; No. 4–40; 3/8 in lg (Att. Pt.)	12	
–4	AN340–4	—	. NUT, hex: steel, cad pl; No. 4–40 (Att. Pt.)	12	
–5	NP140157A	—	. PLATE, identification	1	
–6	AN504C4R4	—	. SCREW, self-tapping: Phillips drive; RH; SS; No. 4–40; 1/4 in lg (Att. Pt.)	4	
–7	2600–10	—	. FASTENER, spring-lock (Camloc)	12	
–8	AN935–5	—	. WASHER, lock: steel, cad pl; No. 5 (Att. Pt.)	12	
–9	45	—	. CHAIN: 14 in lg (Corbin Cabinet)	1	
–10	AN515–8–10	—	. SCREW, mach: slot drive; RH; steel, cad pl; No. 8–32; 5/8 in lg (Att. Pt.)	1	
–11	AN515–8–7	—	. SCREW, mach: slot drive; RH; steel, cad pl; No. 8–32; 7/16 in lg (Att. Pt.)	1	
–12	AN936B8B	—	. WASHER, lock: bronze, tinned; round, No. 8; shakeproof-type, tw ext teeth (Att. Pt.)	2	
–13	AN340–8	—	. NUT, hex: steel, cad pl; No. 8–32 (Att. Pt.)	2	
–14	Coml	—	. WASHER, flat: brass, cad pl; round, 13/32 in ID, 3/4 in OD, 0.063 in thk (Wrought Washer)	1	
–15	M2R53P22	—	. GROMMET	1	
–16	Coml	—	. SLEEVE, rubber: Silicone Rubber Grade #12600, 13/32 in ID, 3/32 in wall thk, 12 in lg (GE)	1	
–17	K7004605P1	—	. BRACKET	1	
–18	AN520B10R6	—	. SCREW, mach: Phillips drive; RH; brass, black oxidized; No. 10–32; 3/8 in lg (Att. Pt.)	2	
–19	1910	—	. WASHER, lock (Att. Pt.) (Shakeproof)	2	
–20	K7004604P1	—	. BRACKET	1	
–21	AN505–8–8	—	. SCREW, mach: slot drive; FH; steel, cad pl; No. 8–32; 1/2 in lg (Att. Pt.)	2	
–22	AN936B8B	—	. WASHER, lock: bronze, tinned; round, No. 8; shakeproof-type, tw ext teeth (Att. Pt.)	2	
–23	AN340–8	—	. NUT, hex: steel, cad pl; No. 8–32 (Att. Pt.)	2	
–24	K7126122P1	—	. HANDLE	1	
–25	K7886371P2	—	. WASHER, extruded	2	
–26	AN345–10	—	. NUT, hex: steel, cad pl; No. 10–32 (Att. Pt. for items 24 and 25)	2	
–27	AN936B10B	—	. WASHER, lock: bronze, tinned; round, No. 10; shakeproof-type, tw ext teeth (Att. Pt. for items 24 and 25)	2	
–28	ML7460330G5	S3101A	. SWITCH, interlock	1	
–29	AN515B6–12	—	. SCREW, mach: slot drive; RH; brass, black oxidized; No. 6–32; 3/4 in lg (Att. Pt.)	2	
–30	AN936B6B	—	. WASHER, lock: bronze, tinned; round, No. 6; shakeproof-type, tw ext teeth (Att. Pt.)	2	
–31	AN340–6	—	. NUT, hex: steel, cad pl; No. 6–32 (Att. Pt.)	2	
–32	ML7460330G2	S3101B	. SWITCH, interlock	1	
–33	AN515–6–18	—	. SCREW, mach: slot drive; RH; steel, cad pl; No. 6–32; 1-1/8 in lg (Att. Pt.)	2	
–34	AN936B6B	—	. WASHER, lock: bronze, tinned; round, No. 6; shakeproof-type, tw ext teeth (Att. Pt.)	2	
–35	AN340–6	—	. NUT, hex: steel, cad pl; No. 6–32 (Att. Pt.)	2	
–36	M7400892P1	—	. BRACKET	1	
–37	AN515B8–8	—	. SCREW, mach: slot drive; RH; brass, black oxidized; No. 8–32; 1/2 in lg (Att. Pt.)	2	
–38	AN936B8B	—	. WASHER, lock: bronze, tinned; round, No. 8; shakeproof-type, tw ext teeth (Att. Pt.)	2	
–39	AN340–8	—	. NUT, hex: steel, cad pl; No. 8–32 (Att. Pt.)	2	
–40	ST22N	S3102	. SWITCH, toggle	1	
–41	1222–1	—	. WASHER, lock (Att. Pt.) (Shakeproof)	1	
–42	T7666802P1	—	. PLATE, side	1	
–43	ML7666807G1	—	. PANEL	1	
–44	AN520B10–6	—	. SCREW, mach: slot drive; RH; brass, black oxidized; No. 10–32; 3/8 in lg (Att. Pt. for items 42 and 43)	42	
–45	1910	—	. WASHER, lock (Att. Pt. for items 42 and 43) (Shakeproof)	42	
–46	C1126	J3101	. CONNECTOR, receptacle (Buggie)	1	
–47	NP137462U	—	. PLATE, identification	1	
–48	AN504C4R4	—	. SCREW, self-tapping: Phillips drive; RH; SS; No. 4–40; 1/4 in lg (Att. Pt.)	2	
–49	ML7400888G1	—	. BRACKET	1	
–50	AN520–10–7	—	. SCREW, mach: slot drive; RH; steel, cad pl; No. 10–32; 7/16 in lg (Att. Pt.)	4	
–51	AN936B10B	—	. WASHER, lock: bronze, tinned; round, No. 10; shakeproof-type, tw ext teeth (Att. Pt.)	4	
	ML7700314G1	—	. COVER SUBASSEMBLY	1	
–52	2600–8	—	. . FASTENER, spring lock (Att. Pt.) (Camloc)	8	
–53	AN935–5	—	. . WASHER, lock: steel, cad pl; No. 5 (Att. Pt.)	8	
–54	P7700314P5	—	. . GASKET	2	
–55	P7700314P6	—	. . GASKET	2	
–56	P7700314P2	—	. . PLATE, cover	1	
–57	M7403529P3	—	. CLEANER, air	1	
–58	ML7666806G1	—	. INLET SUBASSEMBLY	1	
–59	AN510–10–6	—	. SCREW, mach: slot drive; FH; steel, cad pl; No. 10–32; 3/8 in lg (Att. Pt.)	2	
–60	AN520B10–6	—	. SCREW, mach: slot drive; RH; brass, black oxidized; No. 10–32; 3/8 in lg (Att. Pt.)	22	
–61	1910	—	. WASHER, lock (Att. Pt.) (Shakeproof)	22	
–62	AN520–10–6	—	. SCREW, mach: slot drive; RH; steel, cad pl; No. 10–32; 3/8 in lg (Att. Pt.)	2	
–63	AN936B10B	—	. WASHER, lock: bronze, tinned; round, No. 10; shakeproof-type, tw ext teeth (Att. Pt.)	2	
–64	ML7666803G1	—	. CHASSIS	1	
–65	AN520–10–10	—	. SCREW, mach: slot drive; RH; steel, cad pl; No. 10–32; 5/8 in lg (Att. Pt.)	15	
–66	AN520–10–8	—	. SCREW, mach: slot drive; RH; steel, cad pl; No. 10–32; 1/2 in lg (Att. Pt.)	3	

FIG. & INDEX NO.	PART NUMBER	REF SYMBOL	NOMENCLATURE 1 2 3 4 5 6 7	UNITS PER ASSY	APPLI-CATION
			POWER SUPPLY PP–415/CPS–6B (Cont)		
90–67	AN936B10B	—	. WASHER, lock: bronze, tinned; round, No. 10; shakeproof-type, tw ext teeth (Att. Pt.)	18	
–68	AN345–10	—	. NUT, hex: steel, cad pl; No. 10–32 (Att. Pt.)	18	
–69	AN515–416–10	—	. SCREW, mach: slot drive; RH; steel, cad pl; 1/4 in–20; 5/8 in lg (Att. Pt.)	2	
–70	AN936B416B	—	. WASHER, lock: bronze, tinned; round, 1/4 in; shakeproof-type, tw ext teeth (Att. Pt.)	2	
–71	M2R53P22	—	. GROMMET	1	
–72	M2R53P25	—	. GROMMET	2	
	ML7400886G1	—	. RESISTOR ASSEMBLY, fixed	1	
–73	AN515–8–6	—	. SCREW, mach: slot drive; RH; steel, cad pl; No. 8–32; 3/8 in lg (Att. Pt.)	2	
–74	AN936B8B	—	. WASHER, lock: bronze, tinned; round, No. 8; shakeproof-type, tw ext teeth (Att. Pt.)	2	
–75	RC40BF103J	R3111	. . RESISTOR, fixed	1	
–76	RC40BF103J	R3110	. . RESISTOR, fixed	1	
–77	RC40BF103J	R3109	. . RESISTOR, fixed	1	
–78	RC40BF103J	R3108	. . RESISTOR, fixed	1	
–79	RC40BF103J	R3107	. . RESISTOR, fixed	1	
–80	RC40BF103J	R3106	. . RESISTOR, fixed	1	
–81	RC40BF103J	R3105	. . RESISTOR, fixed	1	
–82	K7000084P1	—	. . POST, supporting	2	
–83	AN515–8–6	—	. . SCREW, mach: slot drive; RH; steel, cad pl; No. 8–32; 3/8 in lg (Att. Pt.)	4	
–84	AN936B8B	—	. . WASHER, lock: bronze, tinned; round, No. 8; shakeproof-type, tw ext teeth (Att. Pt.)	4	
–85	M7400885P1	—	. . PANEL	1	
–86	T100–3	—	. . TERMINAL, stud (Bead Chain)	14	
–87	926C	—	. CLAMP	30	
–88	AN520–10–6	—	. SCREW, mach: slot drive; RH; steel, cad pl; No. 10–32; 3/8 in lg (Att. Pt.)	30	
–89	AN936B10B	—	. WASHER, lock: bronze, tinned; round, No. 10; shakeproof-type, tw ext teeth (Att. Pt.)	30	
–90	AN345–10	—	. NUT, hex: steel, cad pl; No. 10–32 (Att. Pt.)	30	
–91	5R4GY	V3101	. TUBE, electron	1	
–92	5R4GY	V3102	. TUBE, electron	1	
–93	5R4GY	V3103	. TUBE, electron	1	
–94	5R4GY	V3104	. TUBE, electron	1	
–95	5R4GY	V3105	. TUBE, electron	1	
–96	5R4GY	V3106	. TUBE, electron	1	
–97	5R4GY	V3107	. TUBE, electron	1	
–98	5R4GY	V3108	. TUBE, electron	1	
–99	5R4GY	V3109	. TUBE, electron	1	
–100	5R4GY	V3110	. TUBE, electron	1	
–101	5R4GY	V3111	. TUBE, electron	1	
–102	5R4GY	V3112	. TUBE, electron	1	
–103	5R4GY	V3113	. TUBE, electron	1	
–104	5R4GY	V3114	. TUBE, electron	1	
–105	5R4GY	V3115	. TUBE, electron	1	
–106	5R4GY	V3116	. TUBE, electron	1	
–107	5R4GY	V3117	. TUBE, electron	1	
–108	5R4GY	V3118	. TUBE, electron	1	
–109	5R4GY	V3119	. TUBE, electron	1	
–110	5R4GY	V3120	. TUBE, electron	1	
–111	5R4GY	V3121	. TUBE, electron	1	
–112	5R4GY	V3122	. TUBE, electron	1	
–113	5R4GY	V3123	. TUBE, electron	1	
–114	5R4GY	V3124	. TUBE, electron	1	
–115	5R4GY	V3125	. TUBE, electron	1	
–116	5R4GY	V3126	. TUBE, electron	1	
–117	5R4GY	V3127	. TUBE, electron	1	
–118	5R4GY	V3128	. TUBE, electron	1	
–119	5R4GY	V3129	. TUBE, electron	1	
–120	5R4GY	V3130	. TUBE, electron	1	
–121	TSB8/101	XV3101	. SOCKET, tube	1	
–122	TSB8/101	XV3102	. SOCKET, tube	1	
–123	TSB8/101	XV3103	. SOCKET, tube	1	
–124	TSB8/101	XV3104	. SOCKET, tube	1	
–125	TSB8/101	XV3105	. SOCKET, tube	1	
–126	TSB8/101	XV3106	. SOCKET, tube	1	
–127	TSB8/101	XV3107	. SOCKET, tube	1	
–128	TSB8/101	XV3108	. SOCKET, tube	1	
–129	TSB8/101	XV3109	. SOCKET, tube	1	
–130	TSB8/101	XV3110	. SOCKET, tube	1	
–131	TSB8/101	XV3111	. SOCKET, tube	1	
–132	TSB8/101	XV3112	. SOCKET, tube	1	
–133	TSB8/101	XV3113	. SOCKET, tube	1	
–134	TSB8/101	XV3114	. SOCKET, tube	1	
–135	TSB8/101	XV3115	. SOCKET, tube	1	
–136	TSB8/101	XV3116	. SOCKET, tube	1	
–137	TSB8/101	XV3117	. SOCKET, tube	1	
–138	TSB8/101	XV3118	. SOCKET, tube	1	
–139	TSB8/101	XV3119	. SOCKET, tube	1	
–140	TSB8/101	XV3120	. SOCKET, tube	1	
–141	TSB8/101	XV3121	. SOCKET, tube	1	
–142	TSB8/101	XV3122	. SOCKET, tube	1	
–143	TSB8/101	XV3123	. SOCKET, tube	1	
–144	TSB8/101	XV3124	. SOCKET, tube	1	
–145	TSB8/101	XV3125	. SOCKET, tube	1	

FIG. & INDEX NO.	PART NUMBER	REF SYMBOL	NOMENCLATURE 1 2 3 4 5 6 7	UNITS PER ASSY	APPLI-CATION
			POWER SUPPLY PP–415/CPS–6B (Cont)		
90–146	TSB8/101	XV3126	. SOCKET, tube	1	
–147	TSB8/101	XV3127	. SOCKET, tube	1	
–148	TSB8/101	XV3128	. SOCKET, tube	1	
–149	TSB8/101	XV3129	. SOCKET, tube	1	
–150	TSB8/101	XV3130	. SOCKET, tube	1	
–151	AN505–6–6	—	. SCREW, mach: slot drive; FH; steel, cad pl; No. 6–32; 3/8 in lg (Att. Pt. for items 121 thru 150)	60	
–152	AN936B6B	—	. WASHER, lock: bronze, tinned; round, No. 6; shakeproof-type, tw ext teeth (Att. Pt. for items 121 thru 150)	60	
–153	AN340–6	—	. NUT, hex: steel, cad pl; No. 6–32 (Att. Pt. for items 121 thru 150)	60	
–154	K7000093P1	—	. DEFLECTOR, air	2	
–155	AN515–8–6	—	. SCREW, mach: slot drive; RH; steel, cad pl; No. 8–32; 3/8 in lg (Att. Pt.)	4	
–156	AN936B8B	—	. WASHER, lock: bronze, tinned; round, No. 8; shakeproof-type, tw ext teeth (Att. Pt.)	4	
–157	AN340–8	—	. NUT, hex: steel, cad pl; No. 8–32 (Att. Pt.)	4	
–158	P7771760P6	B3101	. BLOWER (See Figure 61 for breakdown)	1	
–159	AN515–416–10	—	. SCREW, mach: slot drive; RH; steel, cad pl; 1/4 in–20; 5/8 in lg (Att. Pt.)	4	
–160	AN936B416	—	. WASHER, lock: steel, cad pl; round, 1/4 in; shakeproof-type, tw ext teeth (Att. Pt.)	4	
–161	AN340–416	—	. NUT, hex: steel, cad pl; 1/4 in–20 (Att. Pt.)	4	
–162	7482710	L3102	. REACTOR (GE)	1	
–163	AN340–416	—	. NUT, hex: steel, cad pl; 1/4 in–20 (Att. Pt.)	4	
–164	AN936B416B	—	. WASHER, lock: bronze, tinned; round, 1/4 in; shakeproof-type, tw ext teeth (Att. Pt.)	4	
–165	B0H06A120	K3101	. RELAY, armature (Allied Cont)	1	
–166	B0H06A120	K3102	. RELAY, armature (Allied Cont)	1	
–167	K7887522P6	K3103	. RELAY, thermal	1	
–168	TSB8/102	XK3101	. SOCKET, tube	1	
–169	TSB8/102	XK3102	. SOCKET, tube	1	
–170	TSB8/102	XK3103	. SOCKET, tube	1	
–171	AN505–6–6	—	. SCREW, mach: slot drive; FH; steel, cad pl; No. 6–32; 3/8 in lg (Att. Pt. for items 168, 169 and 170)	6	
–172	AN936B6B	—	. WASHER, lock: bronze, tinned; round, No. 6; shakeproof-type, tw ext teeth (Att. Pt. for items 168, 169 and 170)	6	
–173	AN340–6	—	. NUT, hex: steel, cad pl; No. 6–32 (Att. Pt. for items 168, 169 and 170)	6	
–174	926P	—	. CLAMP (Birtcher)	2	
–175	926B	—	. CLAMP (Birtcher)	1	
–176	AN515–8–6	—	. SCREW, mach: slot drive; RH; steel, cad pl; No. 8–32; 3/8 in lg (Att. Pt. for items 174 and 175)	3	
–177	AN936B8B	—	. WASHER, lock: bronze, tinned; round, No. 8; shakeproof-type, tw ext teeth (Att. Pt. for items 174 and 175)	3	
–178	AN340–8	—	. NUT, hex: steel, cad pl; No. 8–32 (Att. Pt. for items 174 and 175)	3	
–179	CP70B1FG106K	C3103	. CAPACITOR, fixed	1	
–180	CP70B1FG106K	C3102	. CAPACITOR, fixed	1	
–181	CP07SD5	—	. CLAMP (Att. Pt. for items 179 and 180)	4	
–182	AN345–10	—	. NUT, hex: steel, cad pl; No. 10–32 (Att. Pt. for items 179 and 180)	8	
–183	AN936B10B	—	. WASHER, lock: bronze, tinned; round, No. 10; shakeproof-type, tw ext teeth (Att. Pt. for items 179 and 180)	8	
–184	MSX–4–141	TB3102	. BOARD, terminal (Jones HB)	1	
–185	MSX–4–141	TB3101	. BOARD, terminal (Jones HB)	1	
–186	AN515–6–12	—	. SCREW, mach: slot drive; RH; steel, cad pl; No. 6–32; 3/4 in lg (Att. Pt. for items 184 and 185)	8	
–187	AN936B6B	—	. WASHER, lock: bronze, tinned; round, No. 6; shakeproof-type, tw ext teeth (Att. Pt. for items 184 and 185)	8	
–188	AN340–6	—	. NUT, hex: steel, cad pl; No. 6–32 (Att. Pt. for items 184 and 185)	8	
–189	AN515–6–4	—	. SCREW, mach: slot drive; RH; steel, cad pl; No. 6–32; 1/4 in lg	16	
–190	AN936A6	—	. WASHER, lock: steel, cad pl; round, No. 6; shakeproof-type, tw int teeth	16	
–191	AN515–8–7	—	. SCREW, mach: slot drive; RH; steel, cad pl; No. 8–32; 7/16 in lg	4	
–192	AN936B8B	—	. WASHER, lock: bronze, tinned; round, No. 6; shakeproof-type, tw ext teeth	4	
–193	K7874555P20	—	. WASHER, flat	4	
–194	K7106954P3	—	. POST, spacing	4	
–195	AN515–8–7	—	. SCREW, mach: slot drive; RH; steel, cad pl; No. 8–32; 7/16 in lg (Att. Pt.)	4	
–196	AN936B8B	—	. WASHER, lock: bronze, tinned; round, No. 6; shakeproof-type, tw ext teeth (Att. Pt.)	4	
–197	K7874555P20	—	. WASHER, flat (Att. Pt.)	4	
–198	K7400903P1	—	. PLATE, angle	2	
–199	AN505–416–10	—	. SCREW, mach: slot drive; RH; steel, cad pl; 1/4 in–20; 5/8 in lg (Att. Pt.)	4	
–200	AN936B416B	—	. WASHER, lock: bronze, tinned; round, No. 6; shakeproof-type, tw ext teeth (Att. Pt.)	4	
–201	AN340–416	—	. NUT, hex: steel, cad pl; 1/4 in–20 (Att. Pt.)	4	
–202	7482711	L3103	. REACTOR (GE)	1	
–203	7482707	T3103	. TRANSFORMER, power (GE)	1	
–204	7482711	L3101	. REACTOR (GE)	1	
–205	Coml	—	. SCREW, mach: hex head; brass, cad pl; 3/8 in–16; 3/4 in lg (Att. Pt. for items 202, 203 and 204) (Amer Screw)	12	
–206	570067	—	. WASHER, lock (Att. Pt. for items 202, 203 and 204) (Wemco)	12	
–207	7482708	T3102	. TRANSFORMER, power (GE)	1	
–208	7482709	T3101	. TRANSFORMER, power (GE)	1	
–209	Coml	—	. SCREW, mach: hex head; brass, cad pl; 5/8 in–11; 1-1/2 in lg (Att. Pt. for items 207 and 208) (Amer Screw)	8	
–210	570069	—	. WASHER, lock (Att. Pt. for items 207 and 208) (Wemco)	8	
–211	Coml	—	. WASHER, flat: SS; 21/32 in ID, 1-1/4 in OD, 0.100 in thk (Att. Pt. for items 207 and 208) (Wrought Washer)	8	
	ML7000091G1	—	. RESISTOR ASSEMBLY, fixed	1	

FIG. & INDEX NO.	PART NUMBER	REF SYMBOL	NOMENCLATURE 1 2 3 4 5 6 7	UNITS PER ASSY	APPLI-CATION
			POWER SUPPLY PP–415/CPS–6B (Cont)		
90–212	AN515–8–6	—	. SCREW, mach: slot drive; RH; steel, cad pl; No. 8–32; 3/8 in lg (Att. Pt.)	2	
–213	AN936B8B	—	. WASHER, lock: bronze, tinned; round, No. 8; shakeproof-type, tw ext teeth (Att. Pt.)	2	
–214	RC40BF103J	R3104	. . RESISTOR, fixed	1	
–215	RC40BF103J	R3103	. . RESISTOR, fixed	1	
–216	RC40BF103J	R3102	. . RESISTOR, fixed	1	
–217	RC40BF103J	R3101	. . RESISTOR, fixed	1	
–218	K7000084P1	—	. . POST, supporting	2	
–219	AN515–8–6	—	. . SCREW, mach: slot drive; RH; steel, cad pl; No. 8–32; 3/8 in lg (Att. Pt.)	4	
–220	AN936B8B	—	. . WASHER, lock: bronze, tinned; round, No. 8; shakeproof-type, tw ext teeth (Att. Pt.)	4	
–221	K7000089P1	—	. . PANEL	1	
–222	T100–3	—	. . TERMINAL, stud (Bead Chain)	8	
–223	CP70B1FG106K	C3101	. CAPACITOR, fixed	1	
–224	CP07SD5	—	. CLAMP (Att. Pt.)	2	
–225	AN345–10	—	. NUT, hex: steel, cad pl; No. 10–32 (Att. Pt.)	4	
–226	AN936B10B	—	. WASHER, lock: bronze, tinned; round, No. 10; shakeproof-type, tw ext teeth (Att. Pt.)	4	
–227	M7400887P1	—	. PLATE, mounting	1	
–228	AN515–416–10	—	. SCREW, mach: slot drive; RH; steel, cad pl; 1/4 in–20; 5/8 in lg (Att. Pt.)	4	
–229	AN936B416B	—	. WASHER, lock: bronze, tinned; round, 1/4 in; shakeproof-type, tw ext teeth (Att. Pt.)	4	
–230	HCM–R	XF3101	. HOLDER, fuse (Buss)	1	
–231	NP125783A	—	. PLATE, identification	1	
–232	K7126649P7	—	. DISC, indicator	1	
–233	ABS5	F3101	. FUSE, cartridge (Buss)	1	
–234	HCM–R	—	. HOLDER, fuse (Buss)	1	
–235	1228–2	—	. WASHER, lock (Att. Pt. for items 230 and 234) (Shakeproof)	2	
–236	NP125499A	—	. PLATE, identification	1	
–237	K7126649P7	—	. DISC, indicator	1	
	ABS5	—	. FUSE, cartridge (Ref item 233) (Buss)	1	
			RECTIFIER POWER SUPPLY RACK		
91–	ML7354016G1	—	. RECTIFIER POWER SUPPLY RACK (See Figure 90–1 for next higher assembly)	Ref	
–1	No Number	—	. . FRAME (ML7354016P2 thru P18, P21 thru P26, and P60 assembled)	1	
–2	K7000079P1	—	. . SCREW, eye	4	
–3	Coml	—	. . NUT, hex: steel, black oxidized; 3/8 in–16 (Att. Pt.) (Amer Screw)	4	
–4	M7400890P1	—	. . HINGE	1	
–5	AN520B10–6	—	. . SCREW, mach: slot drive; RH; brass, black oxidized; No. 10–32; 3/8 in lg (Att. Pt.)	8	
–6	AN936B10B	—	. . WASHER, lock: bronze, tinned; round, No. 10; shakeproof-type, tw ext teeth (Att. Pt.)	8	
–7	AN345–10	—	. . NUT, hex: steel, cad pl; No. 10–32 (Att. Pt.)	8	
–8	ML7666808G1	—	. . COVER	1	
–9	AN520B10–6	—	. . SCREW, mach: slot drive; RH; brass, black oxidized; No. 10–32; 3/8 in lg (Att. Pt.)	8	
–10	AN936B10B	—	. . WASHER, lock: bronze, tinned; round, No. 10; shakeproof-type, tw ext teeth (Att. Pt.)	8	
–11	AN345–10	—	. . NUT, hex: steel, cad pl; No. 10–32 (Att. Pt.)	8	
–12	M7400901P1	—	. . PLATE, cover	1	
–13	AN515B416–8	—	. . SCREW, mach: slot drive; RH; brass, black oxidized; 1/4 in–20; 1/2 in lg (Att. Pt.)	2	
–14	AN515B416–7	—	. . SCREW, mach: slot drive; RH; brass, black oxidized; 1/4 in–20; 7/16 in lg (Att. Pt.)	3	
–15	AN936A416B	—	. . WASHER, lock: bronze, tinned; round, 1/4 in; shakeproof-type, tw int teeth (Att. Pt.)	5	
–16	M7400904P1	—	. . PLATE, cover	1	
–17	AN515B416–10	—	. . SCREW, mach: slot drive; RH; brass, black oxidized; 1/4 in–20; 5/8 in lg (Att. Pt.)	8	
–18	AN936A416B	—	. . WASHER, lock: bronze, tinned; round, 1/4 in; shakeproof-type, tw int teeth (Att. Pt.)	8	
–19	K7000082P2	—	. . ANCHOR, nut	2	
–20	K7000082P1	—	. . ANCHOR, nut	2	
–21	AN505–416R16	—	. . SCREW, mach: Phillips drive; FH; steel, cad pl; 1/4 in–20; 1 in lg (Att. Pt. for items 19 and 20)	32	
–21A	AN935–416	—	. . WASHER, lock: steel, cad pl; 1/4 in (Att. Pt. for items 19 and 20)	32	
–21B	AN340–416	—	. . NUT, hex: steel, cad pl; 1/4 in–20 (Att. Pt. for items 19 and 20)	32	
–22	ML7000097G1	—	. . BRACKET	2	
–23	AN510–10–10	—	. . SCREW, mach: slot drive; FH; steel, cad pl; No. 10–32; 5/8 in lg (Att. Pt.)	4	
–24	AN936B10B	—	. . WASHER, lock: bronze, tinned; round, No. 10; shakeproof-type, tw ext teeth (Att. Pt.)	4	
–25	AN345–10	—	. . NUT, hex: steel, cad pl; No. 10–32 (Att. Pt.)	4	
–26	ML7400891G1	—	. . BRACKET	1	
–27	ML7400894G1	—	. . BRACKET	1	
–28	ML7400893G1	—	. . BRACKET	1	
–29	ML7666810G1	—	. . BRACKET	1	
–30	ML7666810G2	—	. . BRACKET	1	
–31	ML7400897G1	—	. . BRACKET	1	

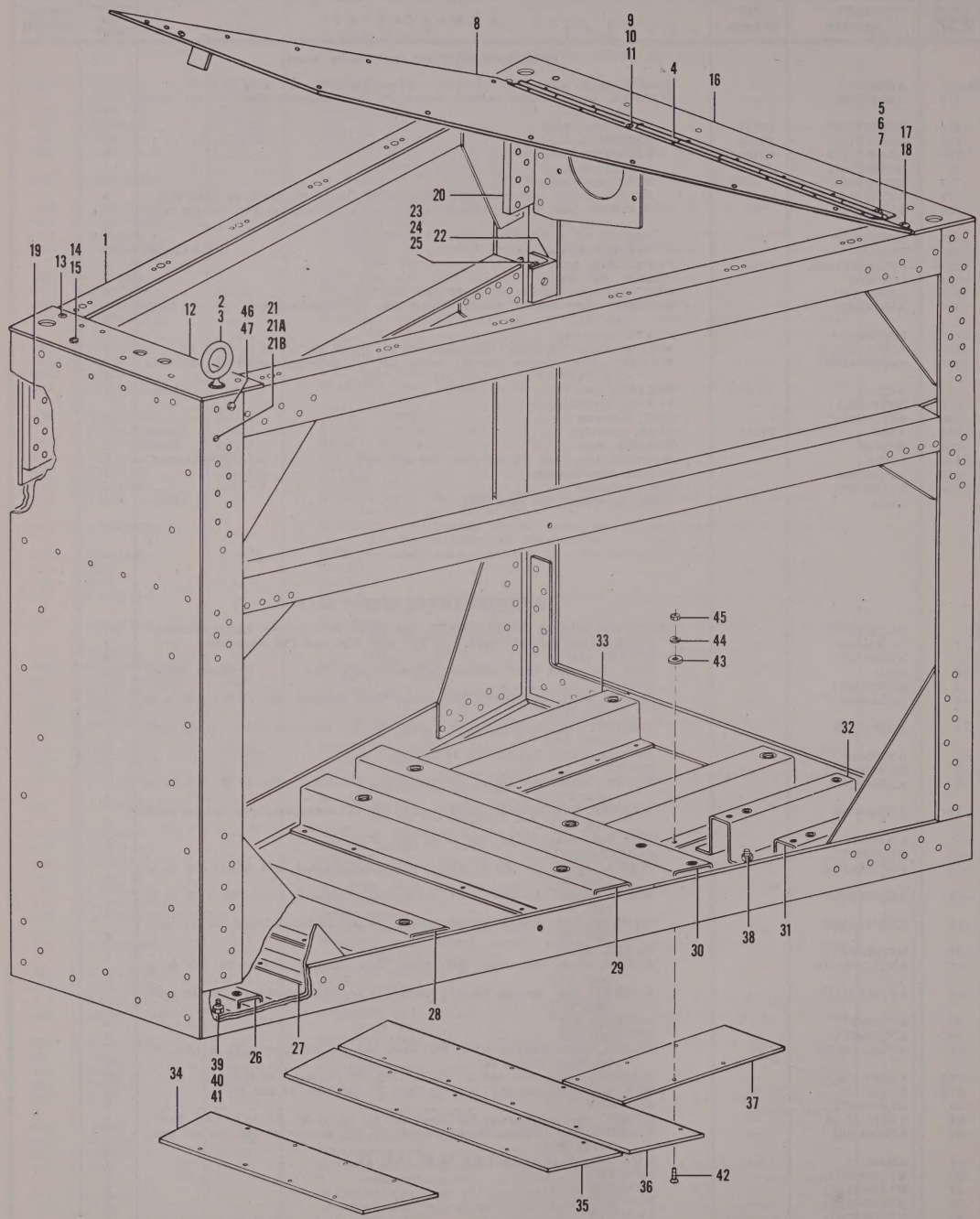

Figure 91. Rectifier Power Supply Rack

FIG. & INDEX NO.	PART NUMBER	REF SYMBOL	NOMENCLATURE 1 2 3 4 5 6 7	UNITS PER ASSY	APPLI-CATION
			RECTIFIER POWER SUPPLY RACK (Cont)		
91–32	ML7400895G1	—	. . BRACKET	1	
–33	ML7400896G1	—	. . BRACKET	2	
–34	M7405307P1	—	. . PLATE	1	
–35	M7405308P1	—	. . PLATE	1	
–36	M7405310P1	—	. . PLATE	1	
–37	M7405309P1	—	. . PLATE	2	
–38	AN520–10–8	—	. . SCREW, mach: slot drive; RH; steel, cad pl; No. 10–32; 1/2 in lg (Att. Pt. for items 26, 27, 31 and 32)	15	
–39	AN510–10–12	—	. . SCREW, mach: slot drive; FH; steel, cad pl; No. 10–32; 3/4 in lg (Att. Pt. for items 26, 27, 31 and 32)	16	
–40	AN936B10B	—	. . WASHER, lock: bronze, tinned; round, No. 10; shakeproof-type, tw ext teeth (Att. Pt. for items 26, 27, 31 and 32)	31	
–41	AN345–10	—	. . NUT, hex: steel, cad pl; No. 10–32 (Att. Pt. for items 26, 27, 31 and 32)	31	
–42	AN505–416–14	—	. . SCREW, mach: slot drive; FH; steel, cad pl; 1/4 in–20; 7/8 in lg (Att. Pt. for items 28, 29, 30 and 33 thru 37)	53	
–43	Coml	—	. . WASHER, flat: steel, cad pl; round, 5/16 in ID, 3/4 in OD, 1/16 in thk (Att. Pt. for items 28, 29, 30 and 33 thru 37) (Wrought Washer)	53	
–44	AN935–416	—	. . WASHER, lock: steel, cad pl; 1/4 in (Att. Pt. for items 28, 29, 30 and 33 thru 37)	53	
–45	AN340–416	—	. . NUT, hex: steel, cad pl; 1/4 in–20 (Att. Pt. for items 28, 29, 30 and 33 thru 37)	53	
–46	AN500B416–12	—	. . SCREW, mach: slot drive; Fil H; brass, black oxidized; 1/4 in–20; 3/4 in lg	8	
–47	1914	—	. . WASHER, lock (Shakeproof)	1	
			RECEIVER CONTROL C–552/CPS–6B		
92–	ML7664398G1	—	RECEIVER CONTROL C–552/CPS–6B	1	
	ML7771854G1	—	. COVER	1	
–1	AN515B8–6	—	. SCREW, mach: slot drive; RH; brass, black oxidized; No. 8–32; 3/8 in lg (Att. Pt.)	6	
–2	AN936B8B	—	. WASHER, lock: bronze, tinned; round, No. 8; shakeproof-type, tw ext teeth (Att. Pt.)	6	
–3	AN340–8	—	. NUT, hex: steel, cad pl; No. 8–32 (Att. Pt.)	6	
–4	K7126123P4	—	. . SCREW, captive	2	
–5	K7128235P1	—	. . BUSHING	2	
–6	K7126174P1	—	. . HOLDER, wrench	1	
–7	K7126174P2	—	. . HOLDER, wrench	1	
–8	AN515B4–5	—	. . SCREW, mach: slot drive; RH; brass, black oxidized; No. 4–40; 5/16 in lg (Att. Pt.)	4	
–9	AN936B4B	—	. . WASHER, lock: bronze, tinned; round, No. 4; shakeproof-type, tw ext teeth (Att. Pt.)	4	
–10	AN340–4	—	. . NUT, hex: steel, cad pl; No. 4–40 (Att. Pt.)	4	
–11	NP136336C	—	. . PLATE, identification	1	
–12	AN504C4–5	—	. . SCREW, self-tapping: slot drive; RH; SS; No. 4–40; 5/16 in lg (Att. Pt.)	4	
–13	K7126137P1	—	. . HINGE	2	
–14	AN515B8–6	—	. . SCREW, mach: slot drive; RH; brass, black oxidized; No. 8–32; 3/8 in lg (Att. Pt.)	6	
–15	1908	—	. . WASHER, lock (Att. Pt.) (Shakeproof)	6	
–16	AN340–8	—	. . NUT, hex: steel, cad pl; No. 8–32 (Att. Pt.)	6	
–17	P7771854P2	—	. . COVER	1	
–18	K7876451P1	—	. WRENCH	1	
–19	K7876451P2	—	. WRENCH	1	
–20	K7129201P1	—	. PLATE, bottom	1	
–21	AN515B8–8	—	. SCREW, mach: slot drive; RH; brass, black oxidized; No. 8–32; 1/2 in lg (Att. Pt.)	6	
–22	1908	—	. WASHER, lock (Att. Pt.) (Shakeproof)	6	
–23	MSX2–142	—	. BOARD, terminal (Jones HB)	1	
–24	AN515B8–12	—	. SCREW, mach: slot drive; RH; brass, black oxidized; No. 8–32; 3/4 in lg (Att. Pt.)	4	
–25	AN936B8B	—	. WASHER, lock: bronze, tinned; round, No. 8; shakeproof-type, tw ext teeth (Att. Pt.)	4	
–26	AN340–8	—	. NUT, hex: steel, cad pl; No. 8–32 (Att. Pt.)	4	
–27	AN508–8–5	—	. SCREW, mach: slot drive; RH; brass, tin pl; No. 8–32; 5/16 in lg	4	
–28	AN936B8B	—	. WASHER, lock: bronze, tinned; round, No. 8; shakeproof-type, tw ext teeth	4	
–29	K7878740	—	. CLAMP	1	
–30	AN515B8–6	—	. SCREW, mach: slot drive; RH; brass, black oxidized; No. 8–32; 3/8 in lg (Att. Pt.)	1	
–31	AN936B8B	—	. WASHER, lock: bronze, tinned; round, No. 8; shakeproof-type, tw ext teeth (Att. Pt.)	1	
–32	AN340–8	—	. NUT, hex: steel, cad pl; No. 8–32 (Att. Pt.)	1	
	ML7129229G1	W7201	. CABLE ASSEMBLY, power	1	
–33	50	—	. . WIRE, electrical: 3 ft lg (GE)	1	
–34	AN3057–8	—	. . CLAMP	1	
–35	AN3106–16S4P	P7427	. . CONNECTOR, plug	1	
–36	NP140089E	—	. . MARKER, cable	1	
–37	M2R53P16	—	. GROMMET	1	
–38	T7666730P2	—	. PLATE, side	1	
–39	AN505B6–7	—	. SCREW, mach: slot drive; FH; brass, black oxidized; No. 6–32; 7/16 in lg (Att. Pt.)	15	
–40	P7771833P1	—	. PANEL, front	1	

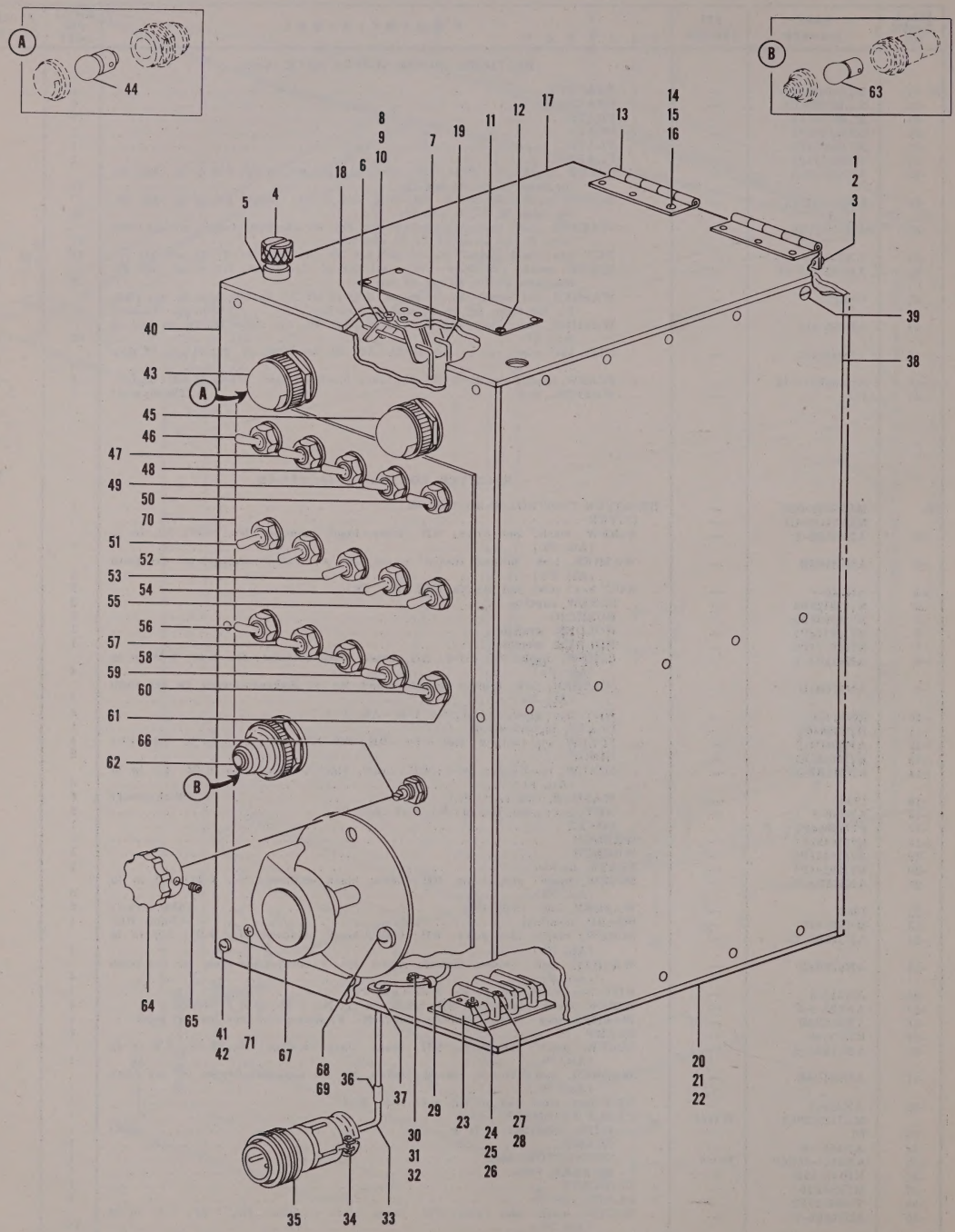

Figure 92. Receiver Control C–552/CPS–6B, Front View (Sheet 1 of 2 sheets, Index Nos. 1 thru 71)

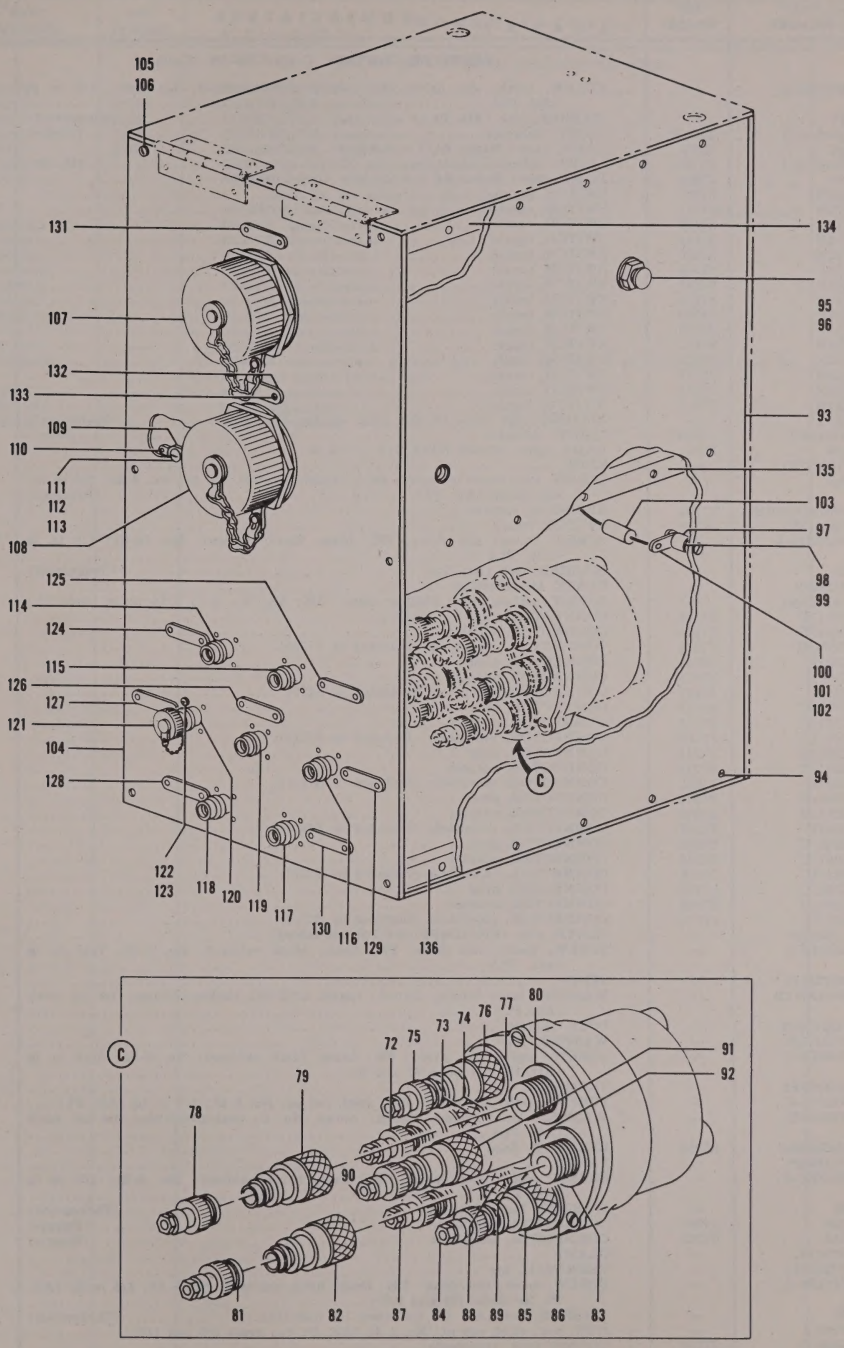

Figure 92. Receiver Control C–552/CPS–6B, Rear View (Sheet 2 of 2 sheets, Index Nos. 72 thru 136)

FIG. & INDEX NO.	PART NUMBER	REF SYMBOL	NOMENCLATURE 1 2 3 4 5 6 7	UNITS PER ASSY	APPLI-CATION
			RECEIVER CONTROL C–552/CPS–6B (Cont)		
92–41	AN515B8–8	—	. SCREW, mach: slot drive; RH; brass, black oxidized; No. 8–32; 1/2 in lg (Att. Pt.)	6	
–42	1908	—	. WASHER, lock (Att. Pt.) (Shakeproof)	6	
–43	471006–1/4	XI7202	. LIGHT, indicator (Dialco)	1	
–44	Coml	I7202	. LAMP, glow: Mazda 64, 6 v, 4-3/8 w	1	
–45	471006–1/4	XI7203	. LIGHT, indicator (Dialco)	1	
	Coml	I7203	. LAMP, glow: Mazda 64, 6 v, 4-3/8 w (Ref item 44)	1	
–46	ST22N	S7201	. SWITCH, toggle	1	
–47	ST22N	S7202	. SWITCH, toggle	1	
–48	ST22N	S7203	. SWITCH, toggle	1	
–49	ST22N	S7204	. SWITCH, toggle	1	
–50	ST22N	S7205	. SWITCH, toggle	1	
–51	ST52P	S7206	. SWITCH, toggle	1	
–52	ST52P	S7207	. SWITCH, toggle	1	
–53	ST52P	S7208	. SWITCH, toggle	1	
–54	ST52P	S7209	. SWITCH, toggle	1	
–55	ST52P	S7210	. SWITCH, toggle	1	
–56	ST22N	S7211	. SWITCH, toggle	1	
–57	ST22N	S7212	. SWITCH, toggle	1	
–58	ST22N	S7213	. SWITCH, toggle	1	
–59	ST22N	S7214	. SWITCH, toggle	1	
–60	ST22N	S7215	. SWITCH, toggle	1	
–61	1222–1	—	. WASHER, lock (Att. Pt. for items 46 thru 60) (Shakeproof)	15	
–62	801006–511	XI7201	. LIGHT, indicator (Dialco)	1	
–63	Coml	I7201	. LAMP, glow: Mazda NE16, 110 v, 1/4 w	1	
–64	K7105373P1	—	. KNOB	1	
–65	Coml	—	. SCREW, set: Bristo six-spline drive; headless; steel, cad pl; No. 8–32; 1/4 in lg; cup point (Att. Pt.) (Bristolco)	2	
–66	RP101SD150KK	R7201	. RESISTOR, variable	1	
–67	P7762919P3	S7216	. SWITCH, rotary	1	
–68	AN520B10–8	—	. SCREW, mach: slot drive; RH; brass, black oxidized; No. 10–32; 1/2 in lg (Att. Pt.)	3	
–69	1910	—	. WASHER, lock (Att. Pt.) (Shakeproof)	3	
–70	NP125859	—	. PLATE, identification	1	
–71	AN504C4R5	—	. SCREW, self-tapping; Phillips drive; RH; SS; No. 4–40 5/16 in lg (Att. Pt.)	2	
-72	UG201/U	E7214	. CONNECTOR, plug	1	
–73	UG260/U	P7214	. CONNECTOR, adapter	1	
–74	UG260/U	P7213	. CONNECTOR, receptacle (Included in S7216)	1	
–75	UG58/U	J7214	. CONNECTOR, plug	1	
–76	UG201/U	E7213	. CONNECTOR, adapter	1	
–77	UG58/U	J7213	. CONNECTOR, receptacle (Included in S7216)	1	
–78	UG260/U	P7212	. CONNECTOR, plug	1	
–79	UG201/U	E7212	. CONNECTOR, adapter	1	
–80	UG58/U	J7212	. CONNECTOR, receptacle (Included in S7216)	1	
–81	UG260/U	P7211	. CONNECTOR, plug	1	
–82	UG201/U	E7211	. CONNECTOR, adapter	1	
–83	UG58/U	J7211	. CONNECTOR, receptacle (Included in S7216)	1	
–84	UG260/U	P7210	. CONNECTOR, plug	1	
–85	UG201/U	E7210	. CONNECTOR, adapter	1	
–86	UG58/U	J7210	. CONNECTOR, receptacle (Included in S7216)	1	
–87	UG260/U	P7215	. CONNECTOR, plug	1	
–88	UG201/U	E7215	. CONNECTOR, adapter	1	
–89	UG58/U	J7215	. CONNECTOR, receptacle (Included in S7216)	1	
–90	UG260/U	P7216	. CONNECTOR, plug	1	
–91	UG201/U	E7216	. CONNECTOR, adapter	1	
–92	UG58/U	J7216	. CONNECTOR, receptacle (Included in S7216)	1	
–93	No Number	—	. PLATE, side (T7664398P5 and P50 assembled)	1	
–94	AN505B6–7	—	. SCREW, mach: slot drive; FH; brass, black oxidized; No. 6–32; 7/16 in lg (Att. Pt.)	15	
–95	K7002268P1	—	. STUD	3	
–96	AN936A516B	—	. WASHER, lock: bronze, tinned; round, 5/16 in; shakeproof-type, tw int teeth (Att. Pt.)	3	
–97	M7462416P9	—	. POST, spacing	1	
–98	K7872445P1	—	. WASHER, flat	1	
–99	AN505B6–5	—	. SCREW, mach: slot drive; FH; brass, black oxidized; No. 6–32; 5/16 in lg (Att. Pt. for items 97 and 98)	1	
–100	K7878455P1	—	. TERMINAL, lug	1	
–101	AN515–6–4	—	. SCREW, mach: slot drive; RH; steel, cad pl; No. 6–32; 1/4 in lg (Att. Pt.)	1	
–102	AN936A6B	—	. WASHER, lock: bronze, tinned; round, No. 6; shakeproof-type, tw int teeth (Att. Pt.)	1	
–103	RC30BF333J	R7202	. RESISTOR, fixed	1	
–104	P7771853P1	—	. PANEL	1	
–105	AN515B8–8	—	. SCREW, mach: slot drive; RH; brass, black oxidized; No. 8–32; 1/2 in lg (Att. Pt.)	6	
–106	1908	—	. WASHER, lock (Att. Pt.) (Shakeproof)	6	
–107	C1126	J7201	. CONNECTOR, receptacle (Buggie)	1	
–108	C1126	J7202	. CONNECTOR, receptacle (Buggie)	1	
–109	K7878743	—	. CLAMP	1	
–110	K7872504P1	—	. TERMINAL, lug	1	
–111	AN515B8–6	—	. SCREW, mach: slot drive; RH; brass, black oxidized; No. 8–32; 3/8 in lg (Att. Pt. for items 109 and 110)	1	
–112	1908	—	. WASHER, lock (Att. Pt. for items 109 and 110) (Shakeproof)	1	
–113	AN340–8	—	. NUT, hex: steel, cad pl; No. 8–32 (Att. Pt. for items 109 and 110)	1	
–114	UG262/U	J7206	. CONNECTOR, receptacle	1	
–115	UG262/U	J7205	. CONNECTOR, receptacle	1	

FIG. & INDEX NO.	PART NUMBER	REF SYMBOL	NOMENCLATURE 1 2 3 4 5 6 7	UNITS PER ASSY	APPLI-CATION
			RECEIVER CONTROL C–552/CPS–6B (Cont)		
92–116	UG262/U	J7204	. CONNECTOR, receptacle	1	
–117	UG262/U	J7203	. CONNECTOR, receptacle	1	
–118	UG262/U	J7208	. CONNECTOR, receptacle	1	
–119	UG262/U	J7209	. CONNECTOR, receptacle	1	
–120	UG262/U	J7207	. CONNECTOR, receptacle	1	
–121	M7468534P2	—	. CAP AND CHAIN SUBASSEMBLY	7	
–122	AN520B3–5	—	. SCREW, mach: slot drive; RH; brass, black oxidized; No. 3–56; 5/16 in lg (Att. Pt. for items 114 thru 121)	28	
–123	1203	—	. WASHER, lock (Att. Pt. for items 114 thru 121) (Shakeproof)	28	
–124	NP136060D	—	. PLATE, identification	1	
–125	NP136060E	—	. PLATE, identification	1	
–126	NP136060A	—	. PLATE, identification	1	
–127	NP136060C	—	. PLATE, identification	1	
–128	NP136060B	—	. PLATE, identification	1	
–129	NP136060F	—	. PLATE, identification	1	
–130	NP136060G	—	. PLATE, identification	1	
–131	NP137458R	—	. PLATE, identification	1	
–132	NP137458S	—	. PLATE, identification	1	
–133	AN504C4R5	—	. SCREW, self-tapping: Phillips drive; RH; SS; No. 4–40; 5/16 in lg (Att. Pt. for items 124 thru 132)	18	
–134	K7128273P1	—	. POST, supporting	2	
–135	K7128271P1	—	. POST, supporting	2	
–136	K7128272P1	—	. POST, supporting	2	

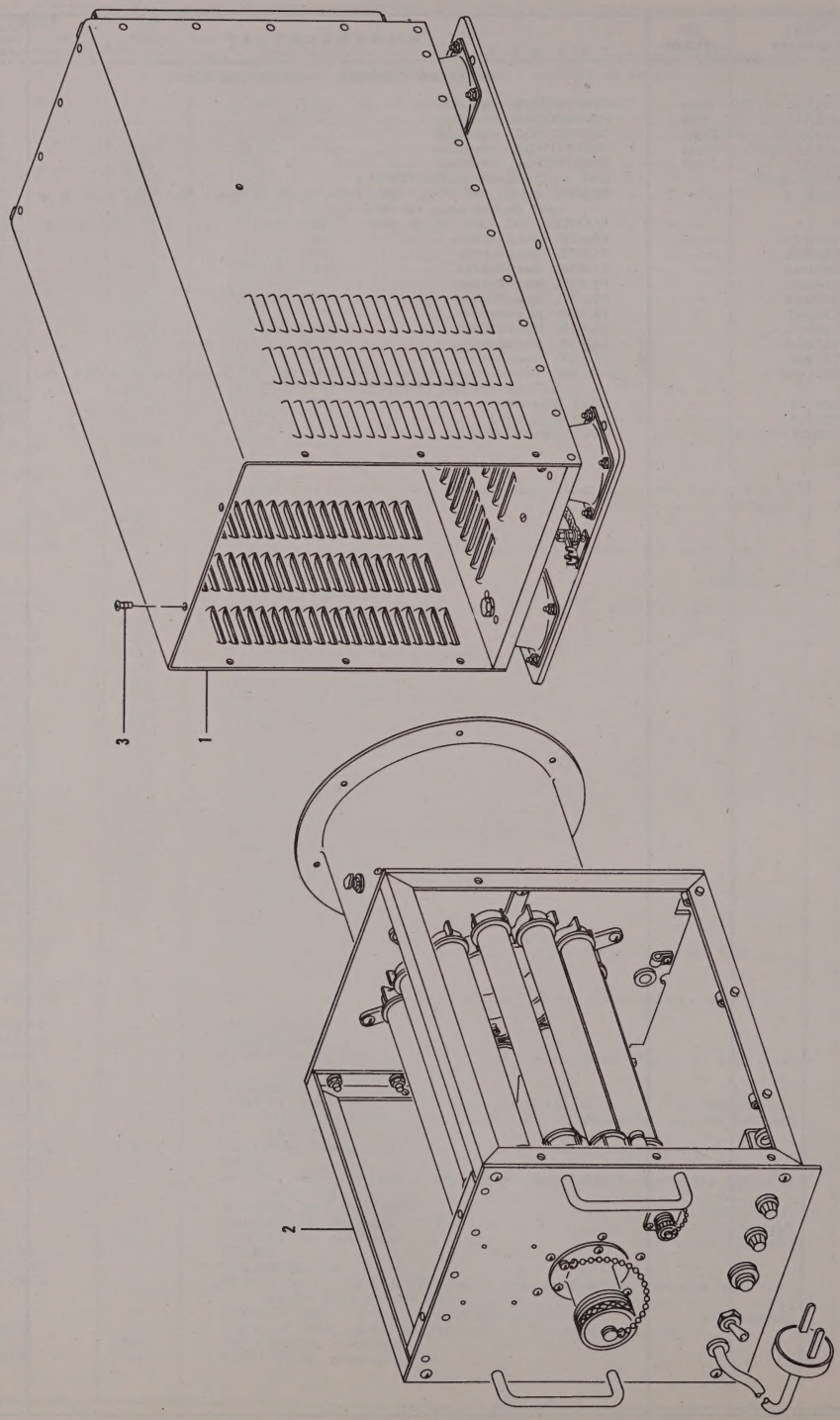

Figure 93. Dummy Load—Cawy–14ACN

FIG. & INDEX NO.	PART NUMBER	REF SYMBOL	1 2 3 4 5 6 7 NOMENCLATURE	UNITS PER ASSY	APPLI-CATION
			DUMMY LOAD CAWY-14ACN		
93–	No Number	—	DUMMY LOAD CAWY-14ACN .....(Bird Engr)	1	
–1	C81715	—	. CABINET (See Figure 94 for breakdown).....(Bird Engr)	1	
–2	D81701A	—	. DUMMY LOAD-BLOWER SUBASSEMBLY (See Figure 95 for breakdown) .....(Bird Engr)	1	
–3	Coml	—	. SCREW, mach: slot drive; OH; steel, painted; No. 10–32; 1/4 in lg (Att. Pt.) .....(Amer Screw)	8	

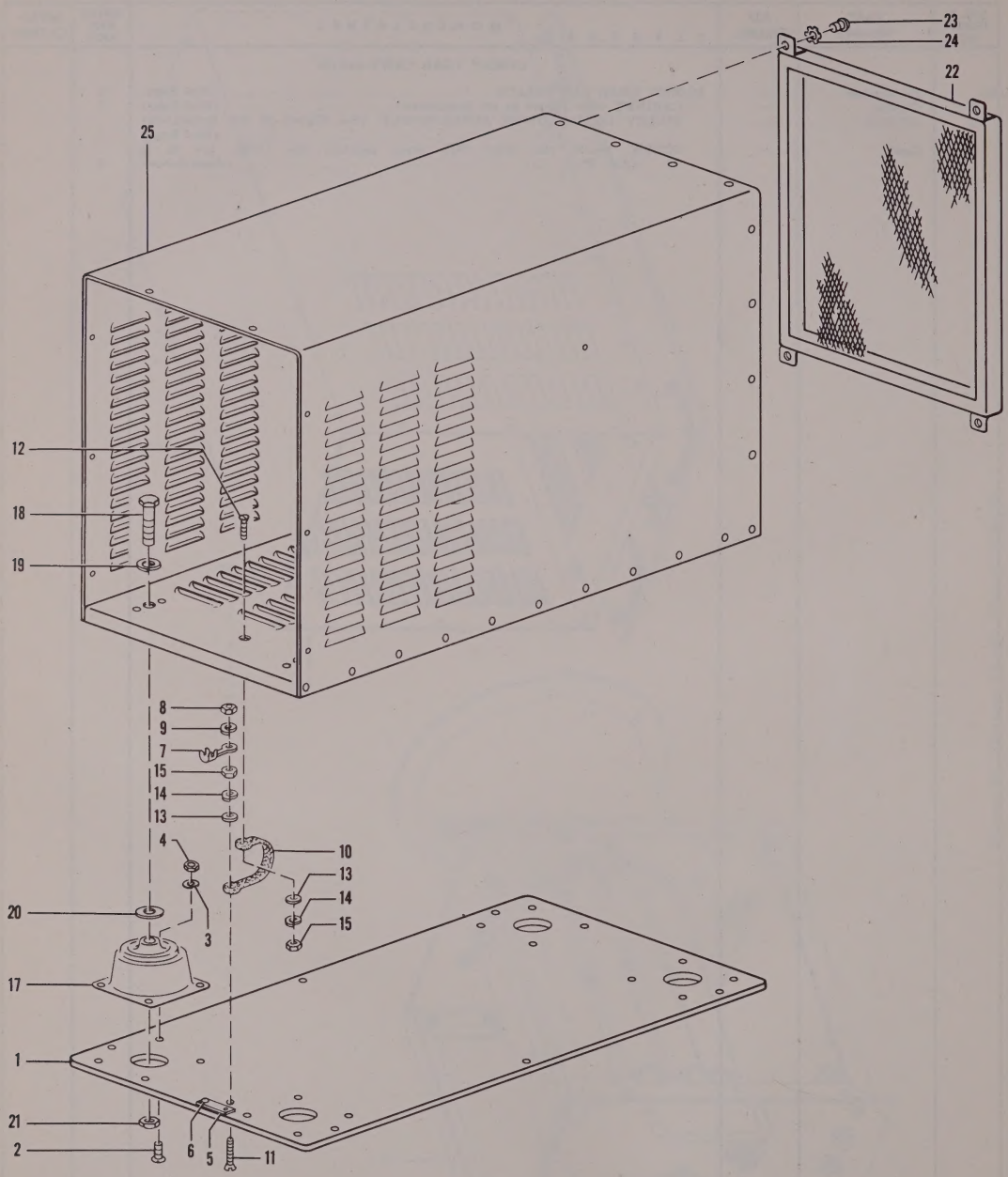

Figure 94. Cabinet

FIG. & INDEX NO.	PART NUMBER	REF SYMBOL	NOMENCLATURE 1 2 3 4 5 6 7	UNITS PER ASSY	APPLI-CATION
			CABINET		
94–	C81715	—	. CABINET (See Figure 93–1 for next higher assembly) (Bird Engr)	Ref	
–1	B81724	—	. . PLATE, mounting (Bird Engr)	1	
–2	AN510–10–8	—	. . SCREW, mach: slot drive; FH; steel, cad pl; No. 10–32; 1/2 in lg (Att. Pt.)	16	
–3	AN935–10	—	. . WASHER, lock: steel, cad pl; No. 10 (Att. Pt.)	16	
–4	AN345–10	—	. . NUT, hex: steel, cad pl; No. 10–32 (Att. Pt.)	16	
–5	A817129	—	. . PLATE, identification (Bird Engr)	1	
–6	Coml	—	. . SCREW, self-tapping: type "F"; slot drive; Bind H; SS; No. 2–56; 3/16 in lg (Att. Pt.) (Parker Kalon)	2	
–7	140623HT	—	. . TERMINAL, lug (Barcy Nicholson)	1	
–8	AN345–10	—	. . NUT, hex: steel, cad pl; No. 10–32 (Att. Pt.)	1	
–9	AN935–10	—	. . WASHER, lock: steel, cad pl; No. 10 (Att. Pt.)	1	
–10	A81740	—	. . STRAP, connector (Bird Engr)	1	
–11	AN510–10–12	—	. . SCREW, mach: slot drive; FH; steel, cad pl; No. 10–32; 3/4 in lg (Att. Pt.)	1	
–12	AN510–10–8	—	. . SCREW, mach: slot drive; FH; steel, cad pl; No. 10–32; 1/2 in lg (Att. Pt.)	1	
–13	AN960–10	—	. . WASHER, flat: steel, cad pl; No. 10 (Att. Pt.)	2	
–14	AN935–10	—	. . WASHER, lock: steel, cad pl; No. 10 (Att. Pt.)	2	
–15	AN345–10	—	. . NUT, hex: steel, cad pl; No. 10–32 (Att. Pt.)	2	
✦					
–17	200PH15	—	. . MOUNT, vibration (Lord)	4	
–18	Coml	—	. . SCREW, mach: hex head; steel, cad pl; 3/8 in–16; 1-5/8 in lg (Att. Pt.)	4	
–19	AN935–616	—	. . WASHER, lock: steel, cad pl; 3/8 in (Att. Pt.)	4	
–20	AN945–6	—	. . WASHER, flat: steel, cad pl; 3/8 in (Att. Pt.)	4	
–21	AN340–616	—	. . NUT, hex: steel, cad pl; 3/8 in–16 (Att. Pt.)	4	
–22	R–82–S	—	. . CLEANER, air (Air-Maze)	1	
–23	AN520–10–8	—	. . SCREW, mach: slot drive; RH; steel, cad pl; No. 10–32; 1/2 in lg (Att. Pt.)	4	
–24	AN936B10	—	. . WASHER, lock: bronze, tinned; round, No. 10; shakeproof-type, tw ext teeth (Att. Pt.)	4	
–25	No Number	—	. . CABINET (C81715P1, P2, P3, P6, P19, P20 and P22, assembled) (Bird Engr)	1	
			DUMMY LOAD-BLOWER SUBASSEMBLY		
95–	D81701A	—	. DUMMY LOAD-BLOWER SUBASSEMBLY (See Figure 93–2 for next higher assembly) (Bird Engr)	Ref	
–1	B81706	—	. . PLATE, back (Bird Engr)	1	
–2	AN520–10–8	—	. . SCREW, mach: slot drive; RH; steel, cad pl; No. 10–32; 1/2 in lg (Att. Pt.)	8	
–3	AN935–10	—	. . WASHER, lock: steel, cad pl; No. 10 (Att. Pt.)	8	
–4	AN345–10	—	. . NUT, hex: steel, cad pl; No. 10–32 (Att. Pt.)	8	
–5	A81778	—	. . RING, support (Bird Engr)	1	
–6	B81750A	B4501	. . BLOWER (See Figure 96 for breakdown) (Bird Engr)	1	
–7	AN520–10–10	—	. . SCREW, mach: slot drive; RH; steel, cad pl; No. 10–32; 5/8 in lg (Att. Pt. for items 5 and 6)	6	
–8	AN935–10	—	. . WASHER, lock: steel, cad pl; No. 10 (Att. Pt. for items 5 and 6)	12	
–9	AN345–10	—	. . NUT, hex: steel, cad pl; No. 10–32 (Att. Pt. for items 5 and 6)	6	
–10	A84515	—	. . STRAP, retaining (Bird Engr)	12	
–11	A81723	—	. . CLIP (Bird Engr)	12	
–12	AN526–420–8	—	. . SCREW, mach: slot drive; truss head; steel, cad pl; 1/4 in–20; 1/2 in lg (Att. Pt.)	12	
–13	AN935–416	—	. . WASHER, lock: steel, cad pl; 1/4 in (Att. Pt.)	12	
–14	AN340–416	—	. . NUT, hex: steel, cad pl; 1/4 in–20 (Att. Pt.)	12	
–15	A2980S–3	—	. . CLAMP (Tinnerman Prod)	1	
–16	AN515–6–8	—	. . SCREW, mach: slot drive; RH; steel, cad pl; No. 6–32; 1/2 in lg (Att. Pt.)	1	
–17	AN935–6	—	. . WASHER, lock: steel, cad pl; No. 6 (Att. Pt.)	2	
–18	AN340–6	—	. . NUT, hex: steel, cad pl; No. 6–32 (Att. Pt.)	1	
–19	1104	—	. . GROMMET (Amer Rad Hdwe)	1	
–20	A817121	R4501	. . RESISTOR, fixed (Bird Engr)	1	
–21	A817121	R4502	. . RESISTOR, fixed (Bird Engr)	1	
–22	A817121	R4503	. . RESISTOR, fixed (Bird Engr)	1	
–23	A817121	R4504	. . RESISTOR, fixed (Bird Engr)	1	
–24	A817121	R4505	. . RESISTOR, fixed (Bird Engr)	1	
–25	A817121	R4506	. . RESISTOR, fixed (Bird Engr)	1	
–26	A817121	R4507	. . RESISTOR, fixed (Bird Engr)	1	
–27	A817121	R4508	. . RESISTOR, fixed (Bird Engr)	1	
–28	A817121	R4509	. . RESISTOR, fixed (Bird Engr)	1	
–29	A817121	R4510	. . RESISTOR, fixed (Bird Engr)	1	
–30	A817121	R4511	. . RESISTOR, fixed (Bird Engr)	1	
–31	A817121	R4512	. . RESISTOR, fixed (Bird Engr)	1	
–32	A81722	—	. . DEFLECTOR, air (Bird Engr)	1	
–33	AN515–6–3	—	. . SCREW, mach: slot drive; RH; steel, cad pl; No. 6–32; 3/16 in lg (Att. Pt.)	3	
–34	AN935–6	—	. . WASHER, lock: steel, cad pl; No. 6 (Att. Pt.)	3	
–35	A81777	C4501	. . CAPACITOR, variable (Bird Engr)	1	
–36	Coml	—	. . SCREW, mach: slot drive; RH; brass, silver pl; No. 4–40; 1/4 in lg (Att. Pt.) (Amer Screw)	1	
–37	Coml	—	. . WASHER, flat: brass, silver pl; 1/8 in ID; 5/16 in OD, 1/32 in thk (Att. Pt.) (Wrought Washer)	1	
–38	A81727	—	. . NUT, lock (Att. Pt.) (Bird Engr)	1	
–39	A84515	—	. . STRAP, retaining (Bird Engr)	12	
–40	A81723	—	. . CLIP (Bird Engr)	12	
–41	AN526–420–8	—	. . SCREW, mach: slot drive; truss head; steel, cad pl; 1/4 in–20; 1/2 in lg (Att. Pt.)	12	
–42	AN935–416	—	. . WASHER, lock: steel, cad pl; 1/4 in (Att. Pt.)	12	
–43	AN340–416	—	. . NUT, hex: steel, cad pl; 1/4 in–20 (Att. Pt.)	12	

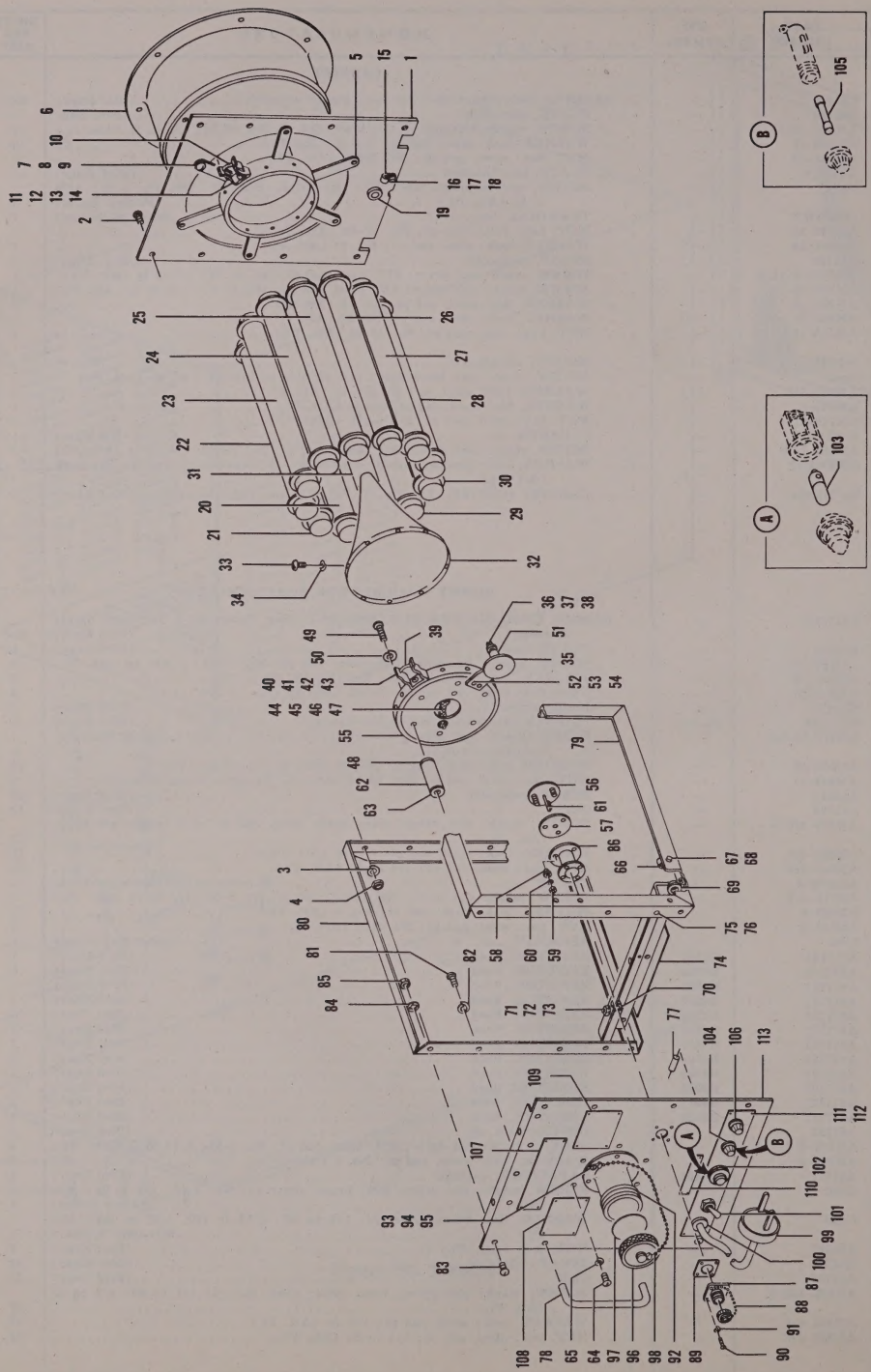

Figure 95. Dummy Load—Blower Subassembly

FIG. & INDEX NO.	PART NUMBER	REF SYMBOL	1 2 3 4 5 6 7 NOMENCLATURE	UNITS PER ASSY	APPLI-CATION
			DUMMY LOAD-BLOWER SUBASSEMBLY (Cont)		
95–44	A81783A	—	. . STRAP, connector ....(Bird Engr)	1	
–45	AN520–10–6	—	. . SCREW, mach: slot drive; RH; steel, cad pl; No. 10–32; 3/8 in lg (Att. Pt.)	2	
–46	AN935–10	—	. . WASHER, lock: steel, cad pl; No. 10 (Att. Pt.)....(Bird Engr)	2	
–47	AN345–10	—	. . NUT, hex: steel, cad pl; No. 10–32 (Att. Pt.)....(Bird Engr)	2	
–48	A81749	—	. . WASHER, flat ....(Bird Engr)	6	
	B81732	—	. . RING, locating ....(Bird Engr)	1	
–49	AN520–10–8	—	. . SCREW, mach: slot drive; RH; steel, cad pl; No. 10–32; 1/2 in lg (Att. Pt. for items 48 and B81732)....(Bird Engr)	6	
–50	AN935–10	—	. . WASHER, lock: steel, cad pl; No. 10 (Att. Pt. for items 48 and B81732)....(Bird Engr)	6	
–51	A81780	—	. . . MOUNTING, capacitor ....(Bird Engr)	1	
–52	Coml	—	. . . SCREW, mach: socket head; steel, cad pl; No. 10–32; 3/8 in lg (Att. Pt.)....(Amer Screw)	2	
–53	AN935–10	—	. . . WASHER, lock: steel, cad pl; No. 10 (Att. Pt.)....(Bird Engr)	2	
–54	A817133	—	. . . NUT, anchor (Att. Pt.)....(Bird Engr)	1	
–55	No Number	—	. . . RING, locating (A81707 and A81708, assembled)....(Bird Engr)	1	
–56	A81725	—	. . PLATE, capacitor ....(Bird Engr)	1	
–57	A81726	—	. . INSULATOR, disk ....(Bird Engr)	1	
–58	A81730	—	. . INSULATOR, bushing ....(Bird Engr)	3	
–59	Coml	—	. . NUT, hex: brass, silver pl; No. 6–32 (Att. Pt. for items 56, 57 and 58) ....(Amer Screw)	3	
–60	Coml	—	. . WASHER, flat: brass, silver pl; round, 5/32 in ID, 9/32 in OD, 1/32 in thk (Att. Pt. for items 56, 57 and 58)....(Wrought Washer)	3	
–61	A81734	—	. . WIRE, electrical ....(Bird Engr)	1	
–62	NS4W0316	—	. . INSULATOR, standoff	6	
–63	A81749	—	. . WASHER, flat ....(Bird Engr)	6	
–64	AN520–10–10	—	. . SCREW, mach: slot drive; RH; steel, cad pl; No. 10–32; 5/8 in lg (Att. Pt. for items 62 and 63)....	6	
–65	1210	—	. . WASHER, lock (Att. Pt. for items 62 and 63)....(Shakeproof)	6	
–66	A2980S–3	—	. . CLAMP ....(Tinnerman Prod)	3	
–67	AN515–6–3	—	. . SCREW, mach: slot drive; RH; steel, cad pl; No. 6–32; 3/16 in lg (Att. Pt.)	3	
–68	AN935–6	—	. . WASHER, lock: steel, cad pl; No. 6 (Att. Pt.)....	3	
–69	1042	—	. . GROMMET ....(Gen Cement)	1	
–70	A3046S6–199	—	. . CLAMP ....(Tinnerman Prod)	1	
–71	AN515–8–6	—	. . SCREW, mach: slot drive; RH; steel, cad pl; No. 8–32; 3/8 in lg (Att. Pt.)	1	
–72	AN935–8	—	. . WASHER, lock: steel, cad pl; No. 8 (Att. Pt.)....	1	
–73	AN340–8	—	. . NUT, hex: steel, cad pl; No. 8–32 (Att. Pt.)....	1	
–74	No Number	—	. . COVER (C81736, A817122, A817123 and A817132 riveted together with 13 rivets) ....(Bird Engr)	1	
–75	AN515–6–3	—	. . SCREW, mach: slot drive; RH; steel, cad pl; No. 6–32; 3/16 in lg (Att. Pt.)	4	
–76	AN935–6	—	. . WASHER, lock: steel, cad pl; No. 6 (Att. Pt.)....	4	
–77	BTS–1/2	R4513	. . RESISTOR, fixed ....(IRC)	1	
–78	A81739	—	. . HANDLE ....(Bird Engr)	2	
–79	B81703	—	. . FRAME ....(Bird Engr)	1	
–80	B81704	—	. . FRAME ....(Bird Engr)	1	
–81	AN520–10–10	—	. . SCREW, mach: slot drive; RH; steel, cad pl; No. 10–32; 5/8 in lg (Att. Pt. for items 78, 79 and 80)....	4	
–82	AN935–10	—	. . WASHER, lock: steel, cad pl; No. 10 (Att. Pt. for items 78, 79 and 80)....	4	
–83	AN520B10–8	—	. . SCREW, mach: slot drive; RH; brass, black oxidized; No. 10–32; 1/2 in lg (Att. Pt. for items 79 and 80)....	4	
–84	1210	—	. . WASHER, lock (Att. Pt. for items 79 and 80)....(Shakeproof)	4	
–85	AN345–10	—	. . NUT, hex: steel, cad pl; No. 10–32 (Att. Pt. for items 79 and 80)....	4	
–86	A81731	C4502	. . CAPACITOR, fixed ....(Bird Engr)	1	
–87	83–1R	J4502	. . CONNECTOR, receptacle ....(Amphenol)	1	
–88	83–1AC	—	. . CAP AND CHAIN SUBASSEMBLY ....(Amphenol)	1	
–89	A817128	—	. . PLATE, identification ....(Bird Engr)	1	
–90	AN515–4–8	—	. . SCREW, mach: slot drive; RH; steel, cad pl; No. 4–40; 1/2 in lg (Att. Pt. for items 86 thru 89)	4	
–91	AN935–4	—	. . WASHER, lock: steel, cad pl; No. 4 (Att. Pt. for items 86 thru 89)....	4	
–92	UG37A/U	J4501	. . CONNECTOR, receptacle	1	
	A81741A	—	. . CAP SUBASSEMBLY ....(Bird Engr)	1	
–93	AN520–10–10	—	. . SCREW, mach: slot drive; RH; steel, cad pl; No. 10–32; 5/8 in lg (Att. Pt. for items 92 and A81741A)	6	
–94	AN935–10	—	. . WASHER, lock: steel, cad pl; No. 10 (Att. Pt. for items 92 and A81741A)	6	
–95	AN345–10	—	. . NUT, hex: steel, cad pl; No. 10–32 (Att. Pt. for items 92 and A81741A)....	6	
–96	No Number	—	. . . CAP (A81743A, A81742A, A81746 and A81744A, assembled)....(Bird Engr)	1	
–97	A81747	—	. . . RETAINER, disk ....(Bird Engr)	1	
–98	977–00–00–0127–05	—	. . . CHAIN ....(Cannonelec)	1	
–99	7057	P4501	. . CONNECTOR, plug ....(Hubbel)	1	
–100	1116	—	. . GROMMET ....(Amer Rad Hdwe)	1	
–101	8823–K2	S4501	. . SWITCH, toggle ....(C-H)	1	
–102	50	—	. . LIGHT, indicator ....(Drake Mfg)	1	
–103	Coml	I4501	. . LAMP, glow: Mazda NE–51, 110 v, 1/25 w	1	
–104	1075–A	XF4501	. . HOLDER, fuse ....(Littelfuse	1	
–105	A81760	F4501	. . FUSE, cartridge ....(Bird Engr)	1	
–106	1075–A	—	. . HOLDER, fuse ....(Littelfuse	1	
	A81760	—	. . FUSE, cartridge (Ref item 105)....(Bird Engr)	1	
–107	A817131A	—	. . PLATE, identification ....(Bird Engr)	1	
–108	A817126	—	. . PLATE, identification ....(Bird Engr)	1	
–109	A817125	—	. . PLATE, identification ....(Bird Engr)	1	
–110	A81790	—	. . PLATE, identification ....(Bird Engr)	1	
–111	B817127	—	. . PLATE, identification ....(Bird Engr)	1	
–112	Coml	—	. . SCREW, self-tapping: slot drive; Bind H; SS; No. 4–40; 3/16 in lg (Att. Pt. for items 107 thru 111)....	18	
–113	No Number	—	. . PANEL (C817124 and A81720 riveted together with 5 rivets).....(Bird Engr)	1	

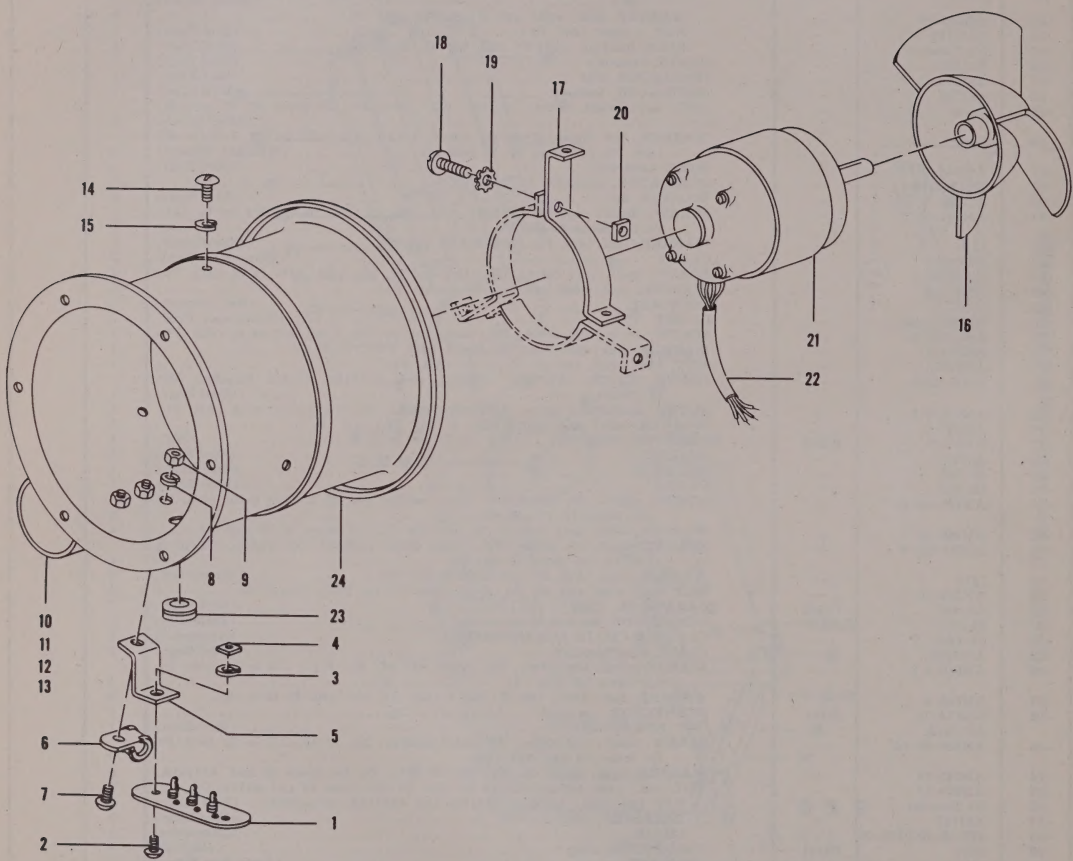

Figure 96. Blower

FIG. & INDEX NO.	PART NUMBER	REF SYMBOL	NOMENCLATURE 1 2 3 4 5 6 7	UNITS PER ASSY	APPLI-CATION
			BLOWER		
96–	B81750A	B4501	. . BLOWER (See Figure 95–6 for next higher assembly).....(Bird Engr)	Ref	
–1	3–34	—	. . . BOARD, terminal .....(Jones HB)	1	
–2	AN515–8–8	—	. . . SCREW, mach: slot drive; RH; steel, cad pl; No. 8–32; 1/2 in lg (Att. Pt.)	2	
–3	AN935–8	—	. . . WASHER, lock: steel, cad pl; No. 8 (Att. Pt.).....	2	
–4	Coml	—	. . . NUT, sq: steel, cad pl; No. 8–32 (Att. Pt.).....(Amer Screw)	2	
–5	A81768	—	. . . BRACKET .....(Bird Engr)	2	
–6	A3046S6–199	—	. . . CLAMP .....(Tinnerman Prod)	1	
–7	AN520–10–6	—	. . . SCREW, mach: slot drive; RH; steel, cad pl; No. 10–32; 3/8 in lg (Att. Pt. for items 5 and 6)	2	
–8	AN935–10	—	. . . WASHER, lock: steel, cad pl; No. 10 (Att. Pt. for items 5 and 6).....	2	
–9	AN345–10	—	. . . NUT, hex: steel, cad pl; No. 10–32 (Att. Pt. for items 5 and 6).....	2	
–10	SRFBC–220–3	—	. . . CAPACITOR, fixed .....(Aerovox)	1	
–11	AN520–10–6	—	. . . SCREW, mach: slot drive; RH; steel, cad pl; No. 10–32; 3/8 in lg (Att. Pt.)	2	
–12	AN935–10	—	. . . WASHER, lock: steel, cad pl; No. 10 (Att. Pt.).....	2	
–13	AN345–10	—	. . . NUT, hex: steel, cad pl; No. 10–32 (Att. Pt.).....	2	
	C817120	—	. . . MOTOR, fan and AC .....(Bird Engr)	1	
–14	AN520–10–6	—	. . . SCREW, mach: slot drive; RH; steel, cad pl; No. 10–32; 3/8 in lg (Att. Pt.)	3	
–15	AN935–10	—	. . . WASHER, lock: steel, cad pl; No. 10 (Att. Pt.).....	3	
–16	1500–28	—	. . . . FAN (Includes No. 10–24 socket drive set screw)...(Dynamic Air Engr)	1	
–17	A83054	—	. . . . BRACKET .....(Bird Engr)	3	
–18	AN515–416–12	—	. . . . SCREW, mach: slot drive; RH; steel, cad pl; 1/4 in–20; 3/4 in lg (Att. Pt.)	3	
–19	1114	—	. . . . WASHER, lock (Att. Pt.) .....(Shakeproof)	3	
–20	Coml	—	. . . . NUT, sq: steel, cad pl; 1/4 in–20 (Att. Pt.).....(Amer Screw)	3	
–21	NCI–13	—	. . . . MOTOR, AC (Breakdown will be supplied at a later date).(Bodine Elec)	1	
–22	B81750AP14	—	. . . SLEEVE, insulating .....(Bird Engr)	1	
–23	1043	—	. . . GROMMET .....(Gen Cement)	1	
–24	A817116	—	. . . HOUSING .....(Bird Engr)	1	

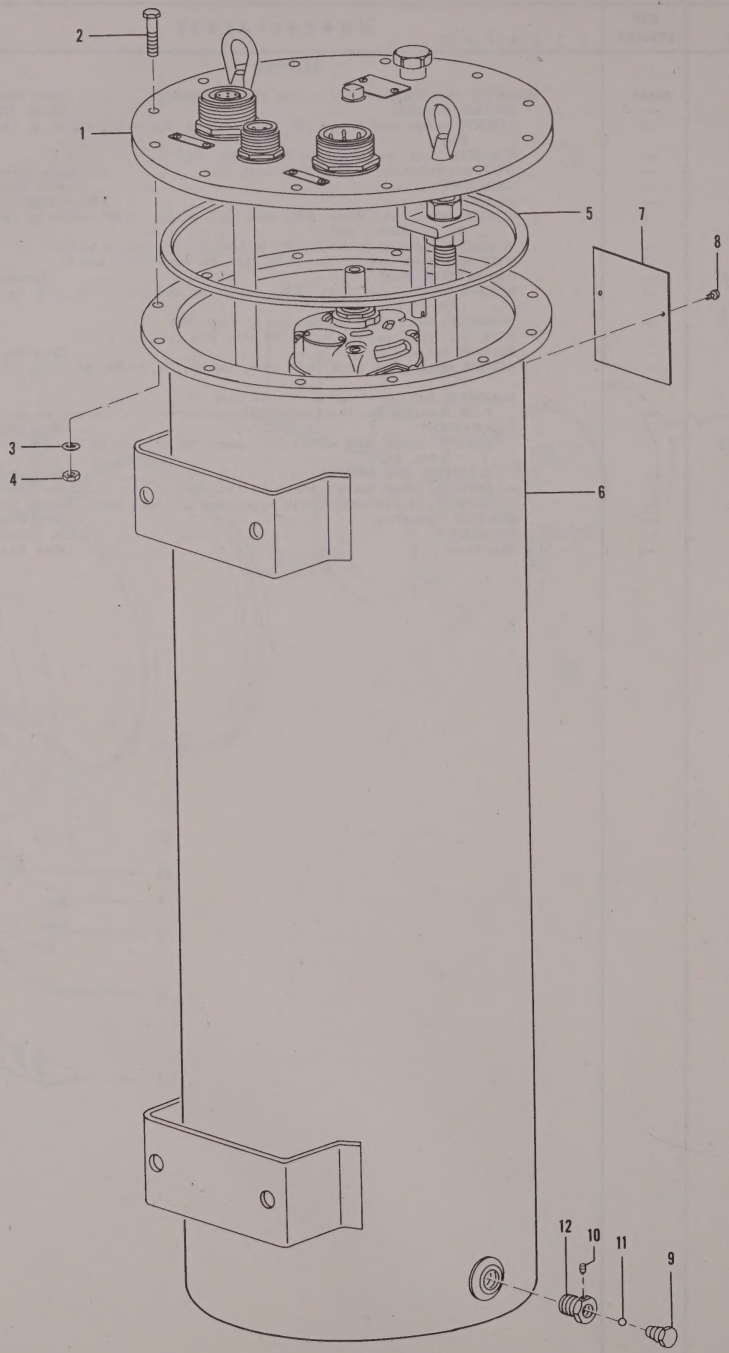

Figure 97. Voltage Regulator CN–93/CPS–6B

FIG. & INDEX NO.	PART NUMBER	REF SYMBOL	NOMENCLATURE 1 2 3 4 5 6 7	UNITS PER ASSY	APPLI-CATION
			VOLTAGE REGULATOR CN–93/CPS–6B		
97–	P9206412P21	—	VOLTAGE REGULATOR CN–93/CPS–6B .....(GE)	1	
–1	No Number	—	. VOLTAGE REGULATOR SUBASSEMBLY (See Figure 98 for breakdown).....	1	
–2	Coml	—	. BOLT, mach: hex head; steel, zinc pl; 5/16 in–18; 1-1/4 in lg (Att. Pt.) ..... (Amer Screw)	12	
–3	AN935–516	—	. WASHER, lock: steel, cad pl; 5/16 in (Att. Pt.).....	12	
–4	AN340–516	—	. NUT, hex: steel, zinc pl; 5/16 in–18 (Att. Pt.).....	12	
–5	V926497P2	—	. GASKET .....(GE)	1	
–6	ML9532711G1	—	. CONTAINER .....(GE)	1	
–7	NP123191	—	. PLATE, identification .....(GE)	1	
–8	AN515–6–3	—	. SCREW, mach: slot drive; RH; steel, cad pl; No. 6–32; 3/16 in lg (Att. Pt.)	2	
	ML2529813G1	—	. VALVE ASSEMBLY .....(GE)	1	
–9	V2949783	—	. . FITTING, pipe .....(GE)	1	
–10	Coml	—	. . SCREW, set: slot drive; headless; brass; No. 8–32; 15/64 in lg (Att. Pt.) ..... (Bristolco)	1	
–11	K9517467P21	—	. . BALL, valve .....(GE)	1	
–12	K2529813P22	—	. . BODY, valve .....(GE)	1	

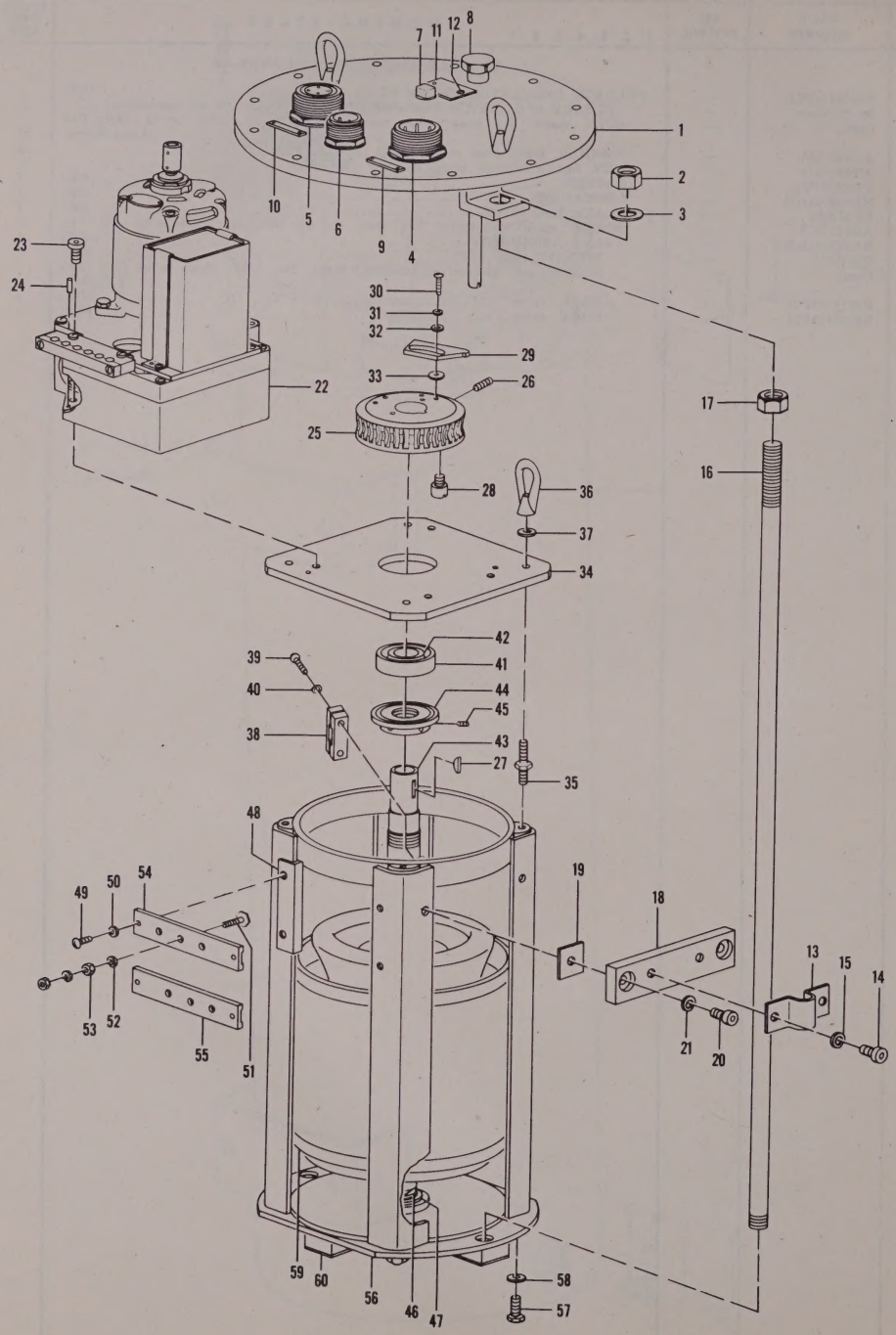

Figure 98. Voltage Regulator Subassembly

FIG. & INDEX NO.	PART NUMBER	REF SYMBOL	NOMENCLATURE 1 2 3 4 5 6 7	UNITS PER ASSY	APPLI-CATION
			VOLTAGE REGULATOR SUBASSEMBLY		
98–	No Number	—	. VOLTAGE REGULATOR SUBASSEMBLY (See Figure 97–1 for next higher assembly)	Ref	
–1	ML9532744G1	—	. . COVER (GE)	1	
–2	AN325–12	—	. . NUT, hex: steel, zinc pl; 3/4 in–16 (Att. Pt.)	2	
–3	AN935–1216	—	. . WASHER, lock: steel, cad pl; 3/4 in (Att. Pt.)	2	
–4	C1252	J10301	. . CONNECTOR, receptacle (GE)	1	
–5	C1254	J10303	. . CONNECTOR, receptacle (GE)	1	
–6	C1253	J10302	. . CONNECTOR, receptacle (GE)	1	
–7	Coml	—	. . PLUG, machine thread: sq head; silicon bronze, nickle pl; 1/2 in pipe thread	1	
–8	ML9529049G1	—	. . KNOB (GE)	1	
–9	NP129955	—	. . PLATE, identification (GE)	1	
–10	NP129954	—	. . PLATE, identification (GE)	1	
–11	NP120991	—	. . PLATE, identification (GE)	1	
–12	AN515–4–4	—	. . SCREW, mach: slot drive; RH; steel, zinc pl; No. 4–40; 1/4 in lg (Att. Pt. for items 9, 10 and 11)	6	
–13	K9236081P22	—	. . CLAMP (GE)	1	
–14	Coml	—	. . SCREW, mach: Allen drive; socket head; steel, zinc pl; 3/8 in–16; 3/4 in lg (Att. Pt.) (Allen Mfg)	2	
–15	AN935–616	—	. . WASHER, lock: steel, cad pl; 3/8 in (Att. Pt.)	2	
–16	V9260467P21	—	. . ROD, tie (GE)	2	
–17	AN325–12	—	. . NUT, hex: steel, zinc pl; 3/4 in–16	2	
–18	K9236081P21	—	. . PLATE, anchor (GE)	1	
–19	K9236081P23	—	. . SHIM (GE)	AR	
–20	Coml	—	. . SCREW, mach: Allen drive; socket head; steel, zinc pl; 3/8 in–16; 3/4 in lg (Att. Pt.) (Allen Mfg)	2	
–21	AN935–616	—	. . WASHER, lock: steel, cad pl; 3/8 in (Att. Pt.)	2	
–22	No Number	—	. . VOLTAGE REGULATOR SUBASSEMBLY (See Figure 99 for breakdown)	1	
–23	Coml	—	. . SCREW, mach: Allen drive; socket head; steel, zinc pl; 5/16 in–18; 5/8 in lg (Att. Pt.) (Allen Mfg)	4	
–24	Coml	—	. . PIN, dowel: steel; 1/4 in dia; 1/2 in lg (Att. Pt.) (Groov-pin)	2	
–25	K9236030P22	—	. . GEAR (GE)	1	
–26	AN565A516H10	—	. . SCREW, set: Allen drive; headless; steel, zinc pl; 3/8 in–16; 1 in lg; flat point (Att. Pt.)	1	
–27	HP–908	—	. . KEY, mach (GE)	1	
–28	K8354937P21	—	. . SCREW, mach (GE)	1	
–29	V9228665P21	—	. . ARM (GE)	2	
–30	Coml	—	. . SCREW, mach: slot drive; RH; silicon bronze; zinc pl; No. 10–24; 3/4 in lg (Att. Pt.) (Amer Screw)	4	
–31	AN935B10	—	. . WASHER, lock: bronze, cad pl; No. 10 (Att. Pt.)	4	
–32	V414749	—	. . WASHER, flat (Att. Pt.) (GE)	4	
–33	Coml	—	. . WASHER, flat: silicon bronze, zinc pl; No. 10 (Att. Pt.) (Wrought Washer)	4	
–34	K8385400P21	—	. . PLATE, top (GE)	1	
–35	K8315983	—	. . STUD (Att. Pt.) (GE)	2	
–36	V1564010	—	. . NUT, eye (Att. Pt.) (GE)	2	
–37	AN935–616	—	. . WASHER, lock: steel, cad pl; 3/8 in (Att. Pt.)	2	
–38	K8315985P21	—	. . CLAMP (GE)	1	
–39	AN515–10–16	—	. . SCREW, mach: slot drive; RH; steel, zinc pl; No. 10–24; 1 in lg (Att. Pt.)	2	
–40	AN935–10	—	. . WASHER, lock: steel, cad pl; No. 10 (Att. Pt.)	2	
–41	172444B	—	. . CUP, bearing (Timken)	1	
–42	17119	—	. . CONE, bearing (Timken)	1	
–43	ML8385409G13	—	. ARMATURE, generator (GE)	1	
–44	K8315978P21	—	. . NUT, round (GE)	1	
–45	Coml	—	. . SCREW, set: Allen drive; headless; steel, zinc pl; 1/4 in–20; 3/8 in lg (Att. Pt.) (Allen Mfg)	1	
–46	07087	—	. . CONE, bearing (Timken)	1	
–47	07204	—	. . CUP, bearing (Timken)	1	
–48	V8381660P21	—	. . PLATE, angle (GE)	2	
	ML9236067G1	—	. . BOARD SUBASSEMBLY, terminal (GE)	1	
	ML9236067G2	—	. . BOARD SUBASSEMBLY, terminal (GE)	1	
–49	AN515–10–12	—	. . SCREW, mach: slot drive; RH; steel, zinc pl; No. 10–24; 3/4 in lg (Att. Pt. for items 48, ML9236067G1 and G2)	4	
–50	AN935–10	—	. . WASHER, lock: steel, cad pl; No. 10 (Att. Pt. for items 48, ML9236067G1 and G2)	4	
–51	V6863007P22	—	. . . STUD (GE)	6	
–52	AN935–416	—	. . . WASHER, lock: steel, cad pl; 1/4 in	12	
–53	AN340–416	—	. . . NUT, hex: steel, zinc pl; 1/4 in–20	12	
–54	K9236067P22	—	. . . BOARD, terminal (GE)	1	
–55	K9236067P23	—	. . . BOARD, terminal (GE)	1	
–56	ML9529047G1	—	. . PLATE, mounting (GE)	1	
–57	Coml	—	. . SCREW, mach: hex head; steel, zinc pl; 3/8 in–16; 3/4 in lg (Att. Pt.) (Corbin Screw)	4	
–58	AN935–616	—	. . WASHER, lock: steel, cad pl; 3/8 in (Att. Pt.)	4	
–59	ML8385414G12	—	. . STATOR, generator (GE)	1	
–60	P9206412P144	—	. . MOUNT, vibration (GE)	4	

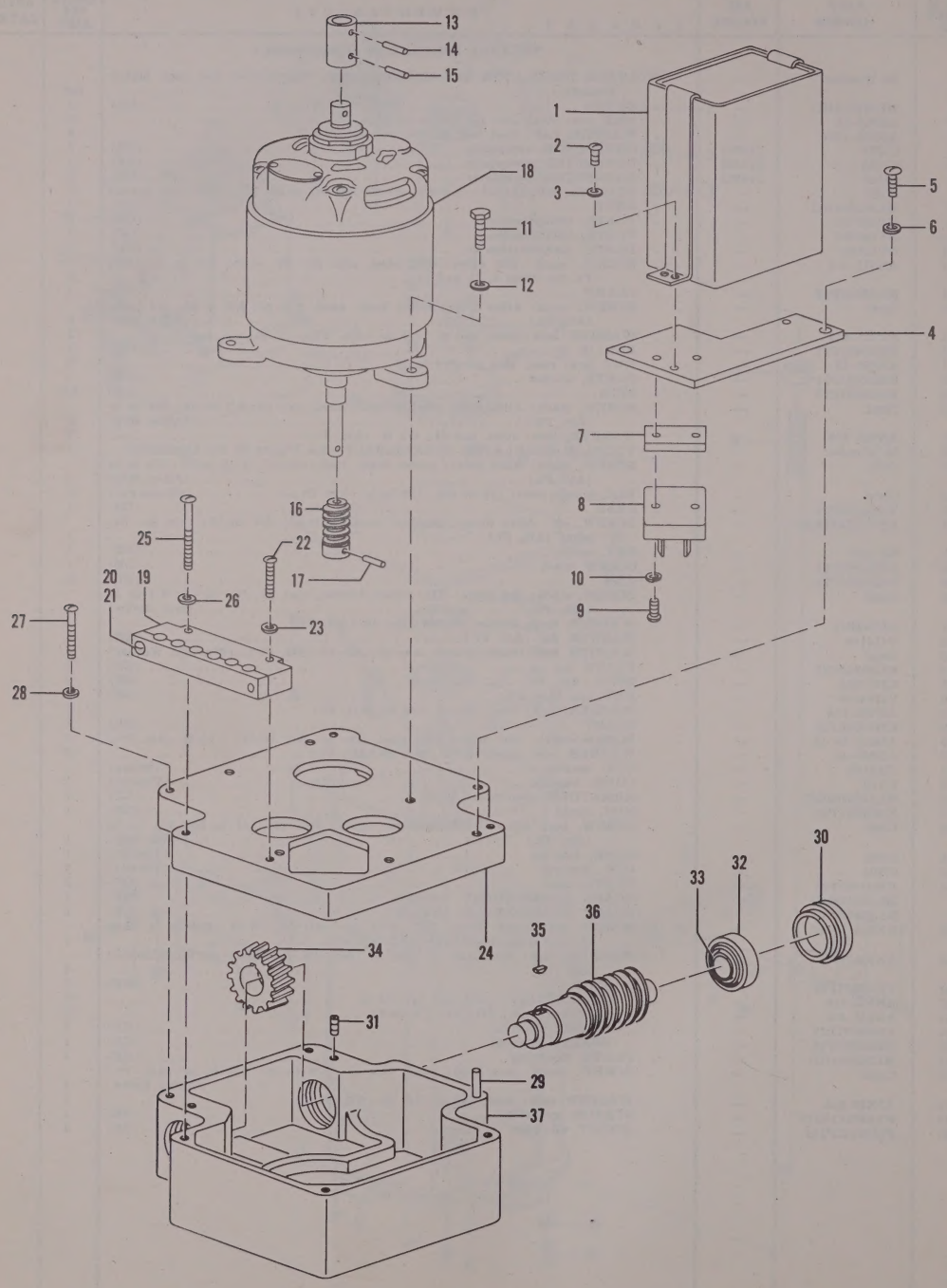

Figure 99. Voltage Regulator Subassembly

FIG. & INDEX NO.	PART NUMBER	REF SYMBOL	NOMENCLATURE 1 2 3 4 5 6 7	UNITS PER ASSY	APPLI-CATION
			VOLTAGE REGULATOR SUBASSEMBLY		
99–	No Number	—	. . VOLTAGE REGULATOR SUBASSEMBLY (See Figure 98–22 for next higher assembly)	Ref	
–1	26F67	C10301	. . . CAPACITOR, fixed (GE)	1	
–2	Coml	—	. . . SCREW, mach: slot drive; RH; silicon bronze, zinc pl; No. 8–32; 1/4 in lg (Att. Pt.) (Amer Screw)	2	
–3	AN935B8	—	. . . WASHER, lock: bronze, cad pl; No. 8 (Att. Pt.)	2	
–4	K9529613P21	—	. . . PLATE, mounting (GE)	1	
–5	Coml	—	. . . SCREW, mach: slot drive; RH; silicon bronze, zinc pl; 1/4 in–20; 1/2 in lg (Att. Pt.) (Amer Screw)	2	
–6	AN935B416	—	. . . WASHER, lock: 2 bronze, cad pl; 1/4 in (Att. Pt.)	2	
–7	K9529613P22	—	. . . PLATE, spacer (GE)	1	
–8	ML5239124G237	—	. . . SWITCH ASSEMBLY, limit (Includes S10301 and S10302) (GE)	1	
–9	Coml	—	. . . SCREW, mach: slot drive; RH; silicon bronze, zinc pl; No. 8–32; 1/2 in lg (Att. Pt. for items 7 and 8) (Amer Screw)	2	
–10	AN935B8	—	. . . WASHER, lock: 2 bronze, cad pl; No. 8 (Att. Pt. for items 7 and 8)	2	
	ML9236047G1	—	. . . MOTOR SUBASSEMBLY, AC (GE)	1	
–11	Coml	—	. . . BOLT, mach: hex head; steel, zinc pl; 1/4 in–20; 3/4 in lg (Att. Pt. (Corbin Screw)	4	
–12	AN935B416	—	. . . WASHER, lock: 2 bronze, cad pl; 1/4 in (Att. Pt.)	4	
–13	V8381663P21	—	. . . . COUPLING, rigid (GE)	1	
–14	K9236047P26	—	. . . . PIN, straight (Att. Pt.) (GE)	1	
–15	Coml	—	. . . . PIN, taper: steel, Morse, No. 000; 5/8 in lg (Att. Pt.) (Morse Tw Dr)	1	
–16	K8354942P21	—	. . . . WORM, gear (GE)	1	
–17	Coml	—	. . . . PIN, taper: steel, Morse, No. 000; 5/8 in lg (Att. Pt.) (Morse Tw Dr)	1	
–18	5KCP25AC7	B10301	. . . . MOTOR, AC (See Figure 100 for breakdown) (GE)	1	
–19	K9529048P21	—	. . . CLAMP (GE)	1	
–20	AN515–10–24	—	. . . SCREW, mach: slot drive; RH; steel, zinc pl; No. 10–24; 1-1/2 in lg (Att. Pt.)	2	
–21	AN340–10	—	. . . NUT, hex: steel, cad pl; No. 10–24 (Att. Pt.)	2	
–22	Coml	—	. . . SCREW, mach: slot drive; RH; silicon bronze, zinc pl; No. 10–24; 7/8 in lg (Att. Pt.) (Amer Screw)	1	
–23	AN935B10	—	. . . WASHER, lock: bronze, cad pl; No. 10 (Att. Pt.)	1	
–24	M5278700P4	—	. . . COVER (GE)	1	
–25	Coml	—	. . . SCREW, mach: slot drive; RH; silicon bronze, zinc pl; No. 10–24; 1-1/2 in lg (Att. Pt. for items 19 and 24) (Amer Screw)	1	
–26	AN935B10	—	. . . WASHER, lock: bronze, cad pl; No. 10 (Att. Pt. for items 19 and 24)	1	
–27	Coml	—	. . . SCREW, mach: slot drive; RH; silicon bronze, zinc pl; No. 10–24; 1-1/4 in lg (Att. Pt.) (Amer Screw)	5	
–28	AN935B10	—	. . . WASHER, lock: bronze, cad pl; No. 10 (Att. Pt.)	5	
–29	Coml	—	. . . PIN, dowel: steel; 5/32 diam; 1 in lg (Att. Pt.) (Groov-pin)	1	
	ML8354935G1	—	. . . GEARCASE (GE)	1	
–30	K8354938P22	—	. . . . BUSHING (GE)	2	
–31	Coml	—	. . . . SCREW, set: Allen drive; headless; steel, zinc pl; No. 10–24; 3/4 in lg (Att. Pt.) (Allen Mfg)	2	
–32	A–4138	—	. . . . CUP, bearing (Timken)	2	
–33	A–4059	—	. . . . CONE, bearing (Timken)	2	
–34	K8354942P22	—	. . . . GEAR (GE)	1	
–35	Coml	—	. . . . KEY, mach: Woodruff; steel; Whitney No. 6 (Whitney Mfg Co)	1	
–36	K8354938P21	—	. . . . WORM, gear (GE)	1	
–37	P8322723P21	—	. . . . HOUSING (GE)	1	

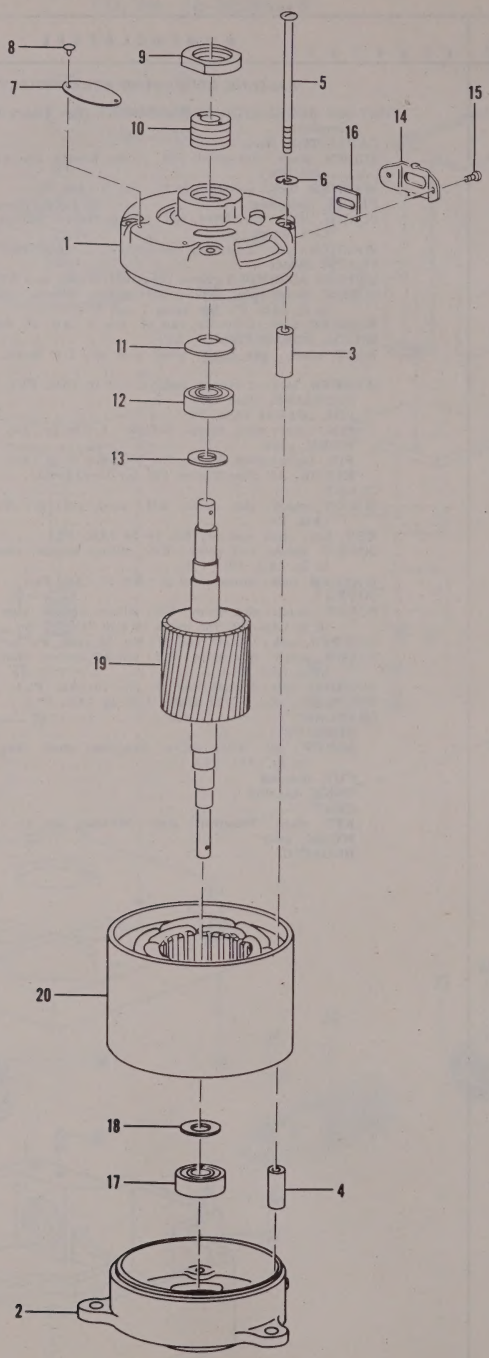

Figure 100. AC Motor

FIG. & INDEX NO.	PART NUMBER	REF SYMBOL	NOMENCLATURE 1 2 3 4 5 6 7	UNITS PER ASSY	APPLI-CATION
			AC MOTOR		
100–	5KCP25AC7	B10301	. . . . AC MOTOR (See Figure 99–18 for next higher assembly).....(GE)	Ref	
–1	M5842288AG1	—	. . . . . SHIELD, end .....(GE)	1	
–2	M5845580AA1	—	. . . . . SHIELD, end .....(GE)	1	
–3	K5895730AA19	—	. . . . . SLEEVE, insulating .....(GE)	4	
–4	K5895730AA15	—	. . . . . SLEEVE, insulating .....(GE)	4	
–5	K5855034AA52	—	. . . . . BOLT, mach (Att. Pt. for items 1 thru 4).....(GE)	4	
–6	AN935–8L	—	. . . . . WASHER, lock: steel, cad pl; No. 8 (Att. Pt. for item 1 thru 4) .....(GE)	4	
–7	S9441	—	. . . . . PLATE, identification .....(GE)	1	
–8	K5828716AA2	—	. . . . . PIN, escutcheon (Att. Pt.).....(GE)	2	
	K5893234BA6	—	. . . . . SHIELD SUBASSEMBLY, end .....(GE)	1	
–9	K5893268AA1	—	. . . . . NUT, round .....(GE)	1	
–10	K5893269AA1	—	. . . . . BUSHING .....(GE)	1	
–11	K5868589AA1	—	. . . . . WASHER, spring .....(GE)	1	
–12	K5855005AAP7	—	. . . . . BEARING, ball .....(GE)	1	
–13	K8701408AA	—	. . . . . WASHER, extruded .....(GE)	1	
–14	K5893271AA1	—	. . . . . CLIP .....(GE)	1	
–15	AN504–8–6	—	. . . . . SCREW, self-tapping: slot drive; RH; steel, cad pl; No. 8–32; 3/8 in lg (Att. Pt.)	2	
–16	K5893272AA1	—	. . . . . PLATE, electrical shield .....(GE)	1	
	K5893273AA7	—	. . . . . SHIELD SUBASSEMBLY, end .....(GE)	1	
–17	K5855005AAP7	—	. . . . . BEARING, ball .....(GE)	1	
–18	K8701408AA	—	. . . . . WASHER, extruded .....(GE)	1	
–19	No Number	—	. . . . . ROTOR, motor (K5893260CA and K5893260C assembled).....(GE)	1	
–20	No Number	—	. . . . . STATOR, motor (K5863662AG7 and K5861546ADG41 assembled).... .....(GE)	1	
			RADAR SET GROUP OA–345/CPS–6B		
101–	ML7300889G2	—	RADAR SET GROUP OA–345/CPS–6B	1	
–1	ML7300935G1	—	. PEDESTAL	1	
–2	PL7301656G1	—	. RECEIVER-TRANSMITTER CASE CY–1120/CPS–6B (See Figure 102 for breakdown)	1	
–3	Coml	—	. SCREW, cap: hex head; brass, cad pl; 1/4 in–20; 1 in lg (Att. Pt.)..... .....(Amer Screw)	12	
–4	AN936B416B	—	. WASHER, lock: bronze, tinned; round, 1/4 in; shakeproof-type, tw ext teeth (Att. Pt.)	12	
–5	ML7300880G1	—	. POWER SUPPLY PP–759/CPS–6B (See Figure 105 for breakdown).....	1	
–6	ML7300884G1	—	. RECEIVER CONTROL C–1001/CPS–6B (See Figure 106 for breakdown).....	1	
–7	ML7603827G1	—	. CONTROL PANEL SB–240/CPS–6B (See Figure 108 for breakdown).....	1	
–8	AN520B10R7	—	. SCREW, mach: Phillips drive; RH; brass, black oxidized; No. 10–32; 7/16 in lg (Att. Pt.)	6	
–9	AN936B10B	—	. WASHER, lock: bronze, tinned; round, No. 10; shakeproof-type, tw ext teeth (Att. Pt.)	6	
–10	AN345–10	—	. NUT, hex: steel, cad pl; No. 10–32 (Att. Pt.)	6	
–11	A7020393P1	—	. COVER	1	
–12	A7020394P1	—	. GASKET	1	
–13	Coml	—	. SCREW, cap: hex head; SS; 1/4 in–20; 2-1/4 in lg (Att. Pt. for items 11 and 12) .....(Amer Screw)	8	
–14	Coml	—	. WASHER, flat: SS; 1/4 in (Att. Pt. for items 11 and 12)....(Wrought Washer)	8	
–15	Coml	—	. NUT, lock: brass, cad pl; 1/4 in–20 (Att. Pt. for items 11 and 12).....(Esna)	8	
–16	ML7603859G1	E21003	. DUPLEXER CU–294/CPS–6B (See Figure 109 for breakdown)	1	
–17	K7121957P1	—	. GASKET	1	
–18	K7001282P1	—	. GASKET	1	
–19	AN515–8R14	—	. SCREW, mach: Phillips drive; RH; steel, cad pl; No. 8–32; 7/8 in lg (Att. Pt. for items 16 and 17)	8	
–20	AN936B8B	—	. WASHER, lock: bronze, tinned; round, No. 8; shakeproof-type, tw ext teeth (Att. Pt. for items 16 and 17)	8	
–21	AN340–8	—	. NUT, hex: steel, cad pl; No. 8–32 (Att. Pt. for items 16 and 17)	8	
–22	Coml	—	. SCREW, cap: hex head; SS; No. 10–32; 7/8 in lg (Att. Pt. for item 16) .....(Amer Screw)	2	
–23	AN936B10B	—	. WASHER, lock: bronze, tinned; round, No. 10; shakeproof-type, tw ext teeth (Att. Pt. for item 16)	2	
–24	AN520–10R14	—	. SCREW, mach: Phillips drive; RH; steel, cad pl; No. 10–32; 7/8 in lg (Att. Pt. for items 16 and 18)	4	
–25	AN936B10B	—	. WASHER, lock: bronze, tinned; round, No. 10; shakeproof-type, tw ext teeth (Att. Pt. for items 16 and 18)	4	
–26	AN345–10	—	. NUT, hex: steel, cad pl; No. 10–32 (Att. Pt. for items 16 and 18)	4	
–27	K7124096P1	E21007	. CONNECTOR, adapter	1	
–28	K7003796P2	—	. GASKET	1	
	ML7404372G1	—	. CLAMP	1	
–29	AN520–10R10	—	. SCREW, mach: Phillips drive; RH; steel, cad pl; No. 10–32; 5/8 in lg (Att. Pt.)	8	

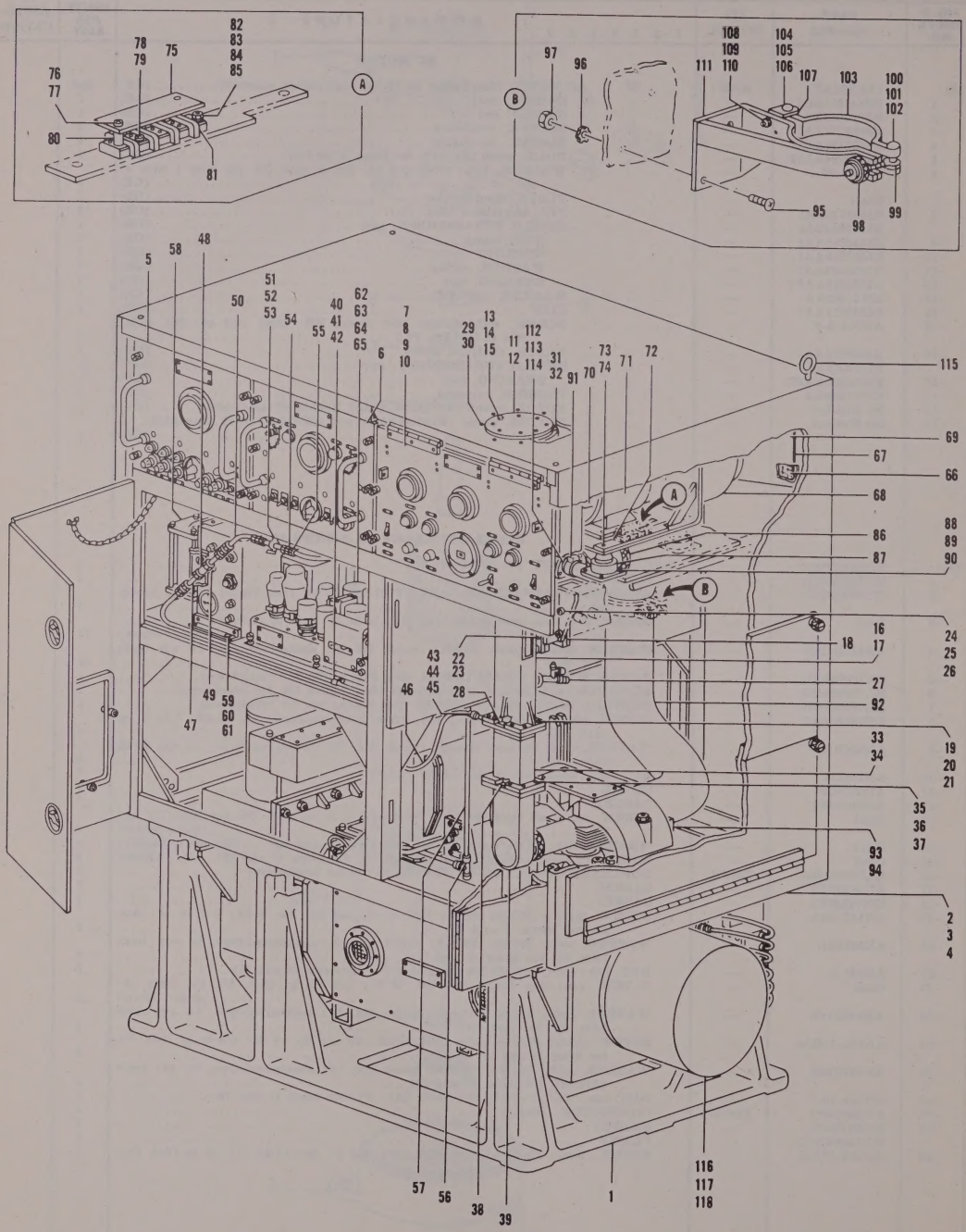

Figure 101. Radar Set Group OA–345/CPS–6B, Front View (Sheet 1 of 4 sheets, Index Nos. 1 thru 118)

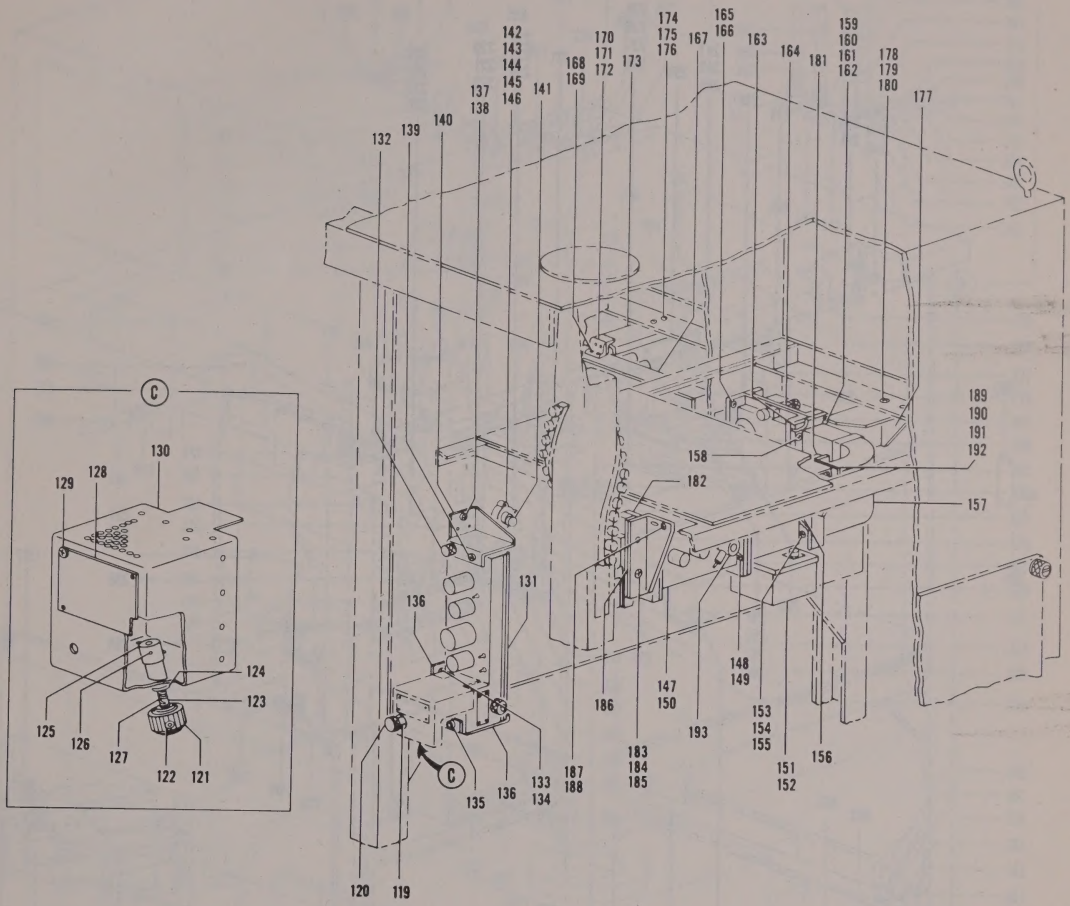

Figure 101. Radar Set Group OA–345/CPS–6B, Partial Front View (Sheet 2 of 4 sheets, Index Nos. 119–193)

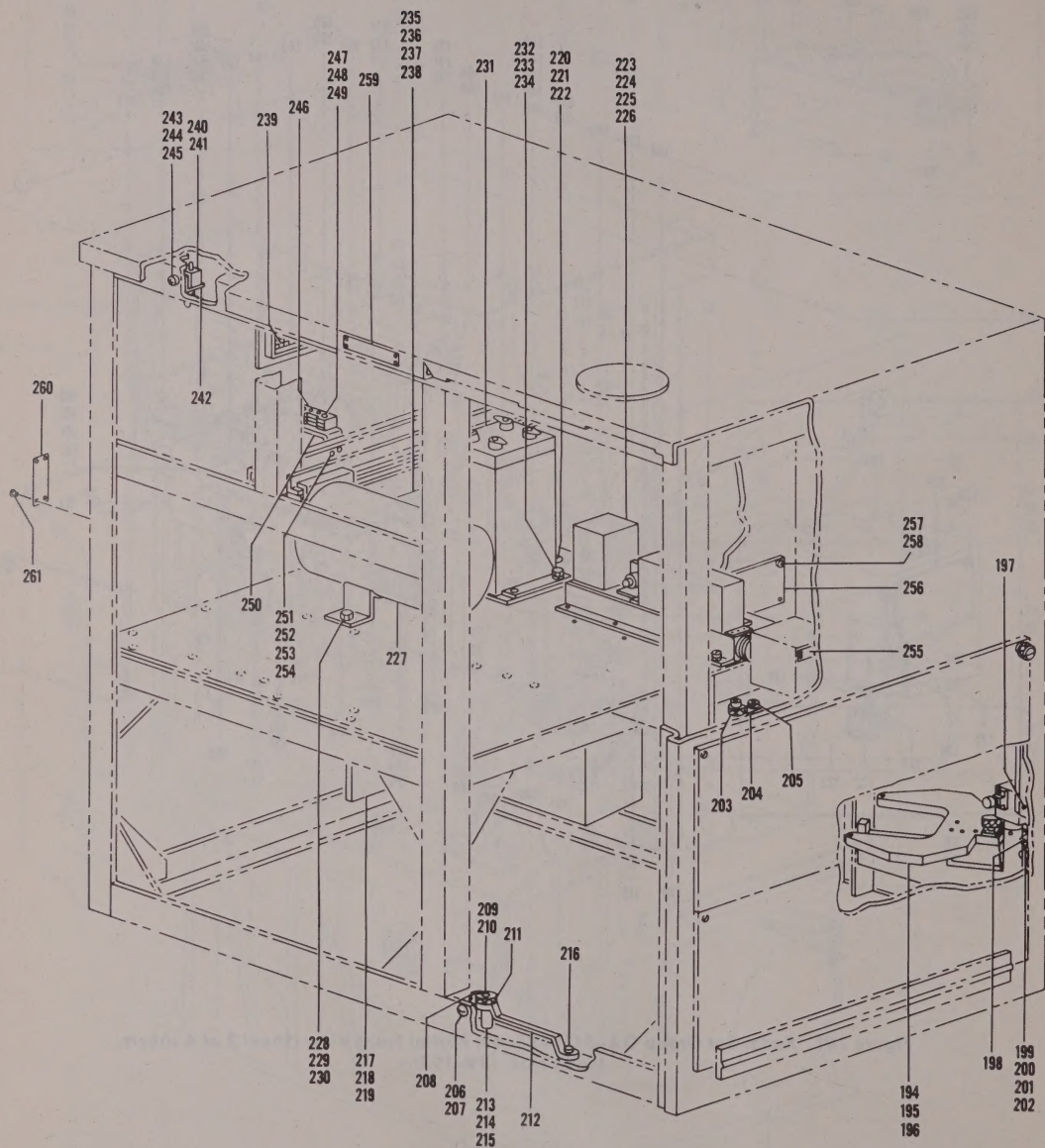

Figure 101. Radar Set Group OA–345/CPS–6B, Partial Front View (Sheet 3 of 4 sheets, Index Nos. 194 thru 261)

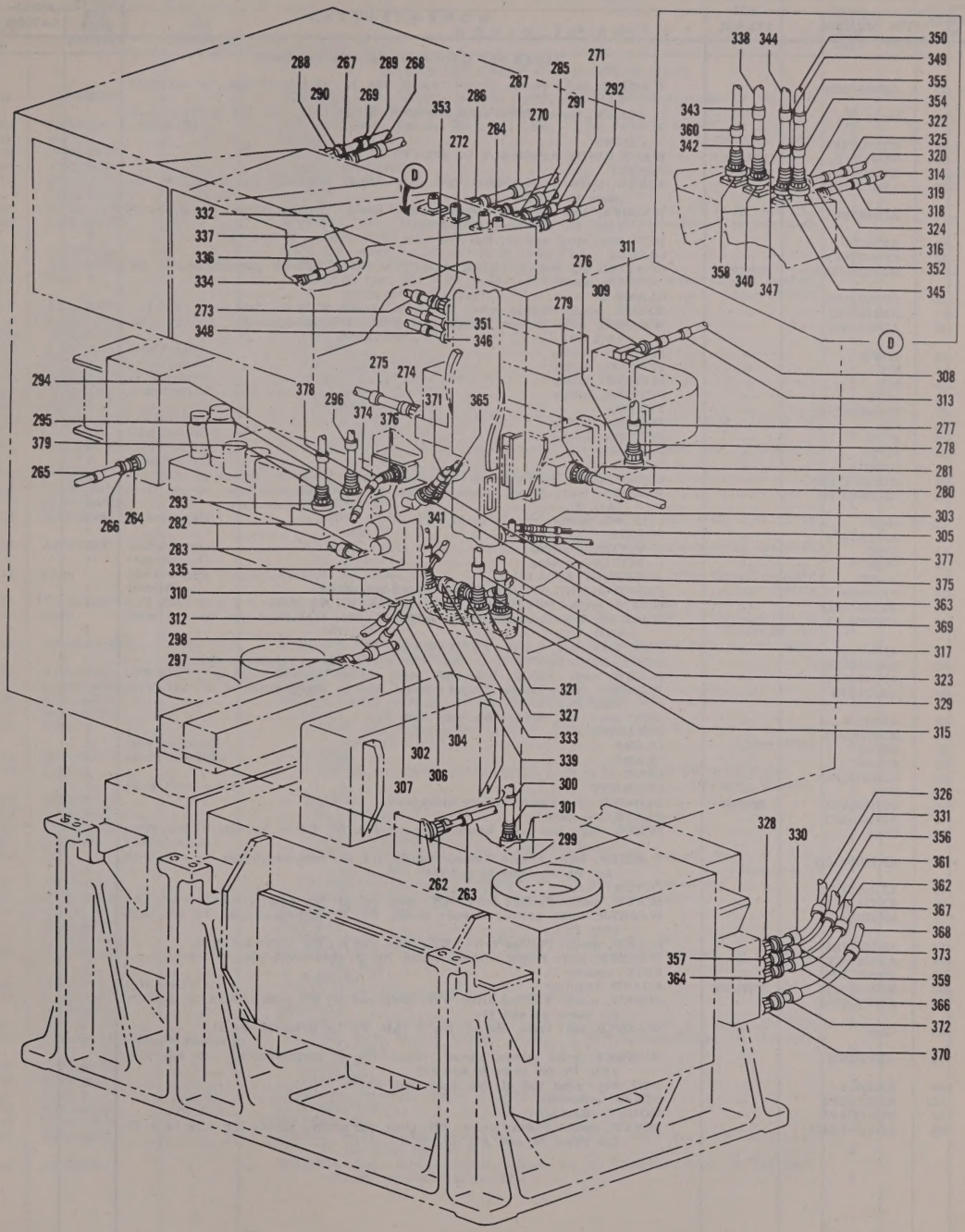

Figure 101. Radar Set Group OA–345/CPS–6B, Rear View (Sheet 4 of 4 sheets, Index Nos. 262 thru 379)

FIG. & INDEX NO.	PART NUMBER	REF SYMBOL	NOMENCLATURE 1 2 3 4 5 6 7	UNITS PER ASSY	APPLI-CATION
			RADAR SET GROUP OA–345/CPS–6B (Cont)		
101–30	AN936B10B	—	. WASHER, lock: bronze, tinned; round, No. 10; shakeproof-type, tw ext teeth (Att. Pt.)	8	
–31	Coml	—	. . SCREW, mach: Bristo six-spline drive; socket head; SS; 1/4 in–20; 1 in lg (Bristolco)	1	
–32	M7404372P2	—	. . CLAMP	1	
–33	B7407421P1	E21002	. WAVE GUIDE ASSEMBLY CG–872/CPS–6B	1	
–34	K7121957P1	—	. GASKET	1	
–35	AN515–8R16	—	. SCREW, mach: Phillips drive; RH; steel, cad pl; No. 8–32; 1 in lg (Att. Pt. for items 33 and 34)	8	
–36	AN936B8B	—	. WASHER, lock: bronze, tinned; round, No. 8; shakeproof-type, tw ext teeth (Att. Pt. for items 33 and 34)	8	
–37	AN340–8	—	. NUT, hex: steel, cad pl; No. 8–32 (Att. Pt. for items 33 and 34)	8	
–38	K7003796P2	—	. GASKET	1	
–39	ML7703119G2	E21001	. COAXIAL TO WAVE GUIDE ADAPTER UG–84/CPS–6B (See Figure 111 for breakdown)	1	
–40	P7763541P5	—	. CLAMP	5	
–41	AN515–8R7	—	. SCREW, mach: Phillips drive; RH; steel, cad pl; No. 8–32; 7/16 in lg (Att. Pt.)	5	
–42	AN936B8B	—	. WASHER, lock: bronze, tinned; round, No. 8; shakeproof-type, tw ext teeth (Att. Pt.)	5	
–43	684FN	—	. FITTING, tubing (Imperbrass)	4	
–44	61F	—	. FITTING, tubing (Imperbrass)	4	
–45	60F	—	. FITTING, tubing (Imperbrass)	4	
–46	44FN	—	. FITTING, tubing (Imperbrass)	1	
–47	E7300889P78	—	. TUBING	4	
–48	64F	—	. FITTING, tubing (Imperbrass)	1	
–49	41FS	—	. FITTING, tubing (Imperbrass)	1	
–50	44FN	—	. TUBING (Imperbrass)	1	
–51	101HD	—	. VALVE, air (Imperbrass)	1	
–52	AN515–416R7	—	. SCREW, mach: Phillips drive; RH; steel, cad pl; 1/4 in–20; 7/16 in lg (Att. Pt.)	2	
–53	AN936B416B	—	. WASHER, lock: bronze, tinned; round, 1/4 in; shakeproof-type, tw ext teeth (Att. Pt.)	2	
–54	103B	—	. FITTING, tubing (Imperbrass)	1	
	A7016875P2	—	. TUBING	1	
–55	37290	—	. . FITTING, tubing (Imperbrass)	1	
–56	37027	—	. . FITTING, tubing (Imperbrass)	1	
–57	168FT	—	. . TUBING: 38 in lg (Imperbrass)	1	
–58	RR9500B	—	. PRESSURIZING KIT (See Figure 112 for breakdown) (Romec)	1	
–59	AN520–10R6	—	. SCREW, mach: Phillips drive; RH; steel, cad pl; No. 10–32; 3/8 in lg (Att. Pt.)	4	
–60	AN936B10B	—	. WASHER, lock: bronze, tinned; round, No. 10; shakeproof-type, tw ext teeth (Att. Pt.)	4	
–61	AN345–10	—	. NUT, hex: steel, cad pl; No. 10–32 (Att. Pt.)	4	
–62	ML7603849G1	—	. MODULATOR CONTROL C–1036/CPS–6B (See Figure 116 for breakdown)	1	
–63	AN515–8R7	—	. SCREW, mach: Phillips drive; RH; steel, cad pl; No. 8–32; 7/16 in lg (Att. Pt.)	5	
–64	AN936B8B	—	. WASHER, lock: bronze, tinned; round, No. 8; shakeproof-type, tw ext teeth (Att. Pt.)	5	
–65	AN340–8	—	. NUT, hex: steel, cad pl; No. 8–32 (Att. Pt.)	5	
–66	M7403529P4	—	. CLEANER, air	1	
–67	820–24	—	. CLAMP (Marmon Prod)	2	
–68	820–36	—	. CLAMP (Marmon Prod)	1	
–69	B7408751P1	—	. DUCT	1	
–70	2764	—	. GROMMET (Atlan India Rub)	1	
–71	B7411339P1	B21001	. BLOWER (See Figure 117 for breakdown)	1	
–72	A7019473P1	—	. PLATE, mounting	1	
–73	Coml	—	. SCREW, cap: hex head; brass, cad pl; 1/4 in–20; 7/8 in lg (Att. Pt. for items 71 and 72) (Amer Screw)	4	
–74	AN936B416B	—	. WASHER, lock: bronze, tinned; round, 1/4 in; shakeproof-type, tw ext teeth (Att. Pt. for items 71 and 72)	4	
–75	A7019474P1	—	. COVER	1	
–76	AN515–6R4	—	. SCREW, mach: Phillips drive; RH; steel, cad pl; No. 6–32; 1/4 in lg (Att. Pt.)	2	
–77	AN936A6B	—	. WASHER, lock: bronze, tinned; round, No. 6; shakeproof-type, tw int teeth (Att. Pt.)	2	
–78	AN515–6R4	—	. SCREW, mach: Phillips drive; RH; steel, cad pl; No. 6–32; 1/4 in lg	6	
–79	AN936A6B	—	. WASHER, lock: bronze, tinned; round, No. 6; shakeproof-type, tw int teeth	6	
–80	A7135276P1	—	. POST, spacing	2	
–81	MSX–6–141	TB21008	. BOARD, terminal (Jones HB)	1	
–82	AN505–6R12	—	. SCREW, mach: Phillips drive; FH; steel, cad pl; No. 6–32; 3/4 in lg (Att. Pt. for items 80 and 81)	4	
–83	Coml	—	. WASHER, flat: brass, cad pl; No. 6 (Att. Pt. for items 80 and 81) (Wrought Washer)	4	
–84	AN936B6B	—	. WASHER, lock: bronze, tinned; round, No. 6; shakeproof-type, tw ext teeth (Att. Pt. for items 80 and 81)	4	
–85	AN340–6	—	. NUT, hex: steel, cad pl; No. 6–32 (Att. Pt.)	2	
–86	K7124782P2	—	. STRAP, connector	1	
–87	B7411315P3	—	. MOUNT, vibration	4	
–88	AN520–10R10	—	. SCREW, mach: Phillips drive; RH; steel, cad pl; No. 10–32; 5/8 in lg (Att. Pt. for items 86 and 87)	16	

FIG. & INDEX NO.	PART NUMBER	REF SYMBOL	NOMENCLATURE 1 2 3 4 5 6 7	UNITS PER ASSY	APPLI-CATION
			RADAR SET GROUP OA–345/CPS–6B (Cont)		
101–89	AN936B10B	—	. WASHER, lock: bronze, tinned; round, No. 10; shakeproof-type, tw ext teeth (Att. Pt. for items 86 and 87)	16	
–90	AN345–10	—	. NUT, hex: steel, cad pl; No. 10–32 (Att. Pt. for items 86 and 87)	16	
–91	820–12	—	. CLAMP (Marmon Prod)	1	
–92	B7411452P1	—	. DUCT	1	
–93	A7022302P1	—	. PLATE, reinforcing	1	
–94	A7022301P1	—	. SCREW, thumb (Att. Pt. for items 92 and 93)	4	
	PL7706391G1	—	. CLAMP	1	
–95	AN515–416R10	—	. SCREW, mach: Phillips drive; RH; steel, cad pl; 1/4 in–20; 5/8 in lg (Att. Pt.)	4	
–96	AN936B416B	—	. WASHER, lock: bronze, tinned; round, 1/4 in; shakeproof-type, tw ext teeth (Att. Pt.)	4	
–97	AN340–416	—	. NUT, hex: steel, cad pl; 1/4 in–20 (Att. Pt.)	4	
–98	A7021917P1	—	. . NUT, thumb	1	
–99	Coml	—	. . SCREW, eye: SS; 5/16 in–18; 1-1/8 in lg; machine screw thread; straight angle round eye 21/64 in ID (Amer Screw)	1	
–100	A7021916P1	—	. . PIN, hinge (Att. Pt.)	1	
–101	AN960–416L	—	. . WASHER, flat: steel, cad pl; 1/4 in (Att. Pt.)	1	
–102	C7706391P13	—	. . PIN, cotter (Att. Pt.)	1	
–103	A7021918P1	—	. . CLAMP	1	
–104	A7021916P2	—	. . PIN, hinge (Att. Pt.)	1	
–105	AN960–416L	—	. . WASHER, flat: steel, cad pl; 1/4 in (Att. Pt.)	1	
–106	C7706391P13	—	. . PIN, cotter (Att. Pt.)	1	
–107	A7021920P1	—	. . BRACKET	1	
–108	AN510–10R8	—	. . SCREW, mach: Phillips drive; FH; steel, cad pl; No. 10–32; 1/2 in lg (Att. Pt.)	3	
–109	AN936B10B	—	. . WASHER, lock: bronze, tinned; round, cad pl; shakeproof-type, tw ext teeth (Att. Pt.)	3	
–110	AN345–10	—	. . NUT, hex: steel, cad pl; No. 10–32 (Att. Pt.)	3	
–111	PL7021921G1	—	. . CLAMP	1	
–112	PL7021906G1	—	. . FITTING, duct	1	
–113	AN515–8R5	—	. . SCREW, mach: Phillips drive; RH; steel, cad pl; No. 8–32; 5/16 in lg (Att. Pt.)	3	
–114	AN936B8B	—	. . WASHER, lock: bronze, tinned; round, No. 8; shakeproof-type, tw ext teeth (Att. Pt.)	3	
–115	Coml	—	. SCREW, eye: steel, cad pl; 1/2 in–13; 3/4 in lg; machine screw thread; straight angle round eye 2-1/4 in ID (Amer Screw)	4	
–116	ML7300892G1	—	. RADAR TRANSMITTER T–332/CPS–6B (See Figure 118 for breakdown)	1	
–117	Coml	—	. SCREW, cap: hex head; brass, cad pl; 1/4 in–20; 1-1/4 in lg; threaded full lg (Att. Pt.) (Amer Screw)	24	
–118	AN936B416B	—	. WASHER, lock: bronze, tinned; round, 1/4 in; shakeproof-type, tw ext teeth (Att. Pt.)	24	
–119	A7019464P1	—	. POST, spacing	1	
	PL7409543G1	—	. COVER	1	
–120	A7019465P1	—	. SCREW, thumb (Att. Pt. for PL7409543G1 and item 119)	1	
–121	K7871270P4	—	. . KNOB	1	
–122	Coml	—	. . SCREW, set: Allen drive; headless; SS; cad pl; No. 8–32; 1/4 in lg; cup point (Att. Pt.) (Allen Mfg)	2	
–123	K2418238P1	—	. . SPRING	1	
–124	Coml	—	. . WASHER, flat: brass, cad pl; round, 0.188 in ID, 0.500 in OD, 0.040 in thk (Wrought Washer)	1	
–125	K7116047P1	—	. . WRENCH	1	
–126	M7461888P53	—	. . PIN, taper (Att. Pt.)	1	
–127	A7019470P1	—	. . SHAFT	1	
–128	NP157506	—	. . PLATE, identification	1	
–129	Coml	—	. . SCREW, self-tapping: Phillips drive; Bind H; SS, tinned; No. 4–40; 3/16 in lg (Att. Pt.) (Shakeproof)	4	
–130	No Number	—	. . COVER (A7019469P1, B7409543P2, P4, P5 and P15, assembled)	1	
–131	ML7704491G1	—	. RF OSCILLATOR O–166/CPS–6B (See Figure 123 for breakdown)	1	
–132	A7010280P3	—	. SCREW, thumb (Att. Pt.)	3	
	PL7409542G1	—	. BRACKET	1	
–133	AN515–416R10	—	. SCREW, mach: Phillips drive; RH; steel, cad pl; 1/4 in–20; 5/8 in lg (Att. Pt.)	4	
–134	AN936B416B	—	. WASHER, lock: bronze, tinned; round, 1/4 in; shakeproof-type, tw ext teeth (Att. Pt.)	4	
–135	K7128235P2	—	. . BUSHING	1	
–136	No Number	—	. . BRACKET (B7409542P2 and P4 assembled)	1	
	PL7409540G1	—	. BRACKET	1	
–137	AN515–416R10	—	. SCREW, mach: Phillips drive; RH; steel, cad pl; 1/4 in–20; 5/8 in lg (Att. Pt.)	3	
–138	AN936B416B	—	. WASHER, lock: bronze, tinned; round, 1/4 in; shakeproof-type, tw ext teeth (Att. Pt.)	3	
–139	K7128235P2	—	. . BUSHING	2	
–140	B7409540P2	—	. . BRACKET	1	
–141	Coml	I21001	. LAMP, incandescent: Mazda 50A/RS, 120 v, 50 w	1	
–142	K7118447P1	XI21001	. LAMPHOLDER	1	
–143	K7872443P1	—	. WASHER, flat	2	
–144	AN515–8R18	—	. SCREW, mach: Phillips drive; RH; steel, cad pl; No. 8–32; 1-1/8 in lg (Att. Pt. for items 142 and 143)	2	
–145	AN936B8B	—	. WASHER, lock: bronze, tinned; round, No. 8; shakeproof-type, tw ext teeth (Att. Pt. for items 142 and 143)	2	

FIG. & INDEX NO.	PART NUMBER	REF SYMBOL	NOMENCLATURE 1 2 3 4 5 6 7	UNITS PER ASSY	APPLI-CATION
			RADAR SET GROUP OA–345/CPS–6B (Cont)		
101–146	AN340–8	—	NUT, hex: steel, cad pl; No. 8–32 (Att. Pt. for items 142 and 143)	2	
–147	1B58	V21001	TUBE, electron	1	
–148	AN520–10R10	—	SCREW, mach: Phillips drive; RH; steel, cad pl; No. 10–32; 5/8 in lg (Att. Pt.)	4	
–149	AN936B10B	—	WASHER, lock: bronze, tinned; round, No. 10; shakeproof-type, tw ext teeth (Att. Pt.)	4	
–150	K7003796P2	—	GASKET	1	
–151	A1912–110B	E21004	SHUTTER WAVE GUIDE SA–302/CPS–6B (See Figure 124 for breakdown) (Terpening)	1	
–152	AN520–10R10	—	SCREW, mach: Phillips drive; RH; steel, cad pl; No. 10–32; 5/8 in lg (Att. Pt.)	2	
–153	AN520–10R16	—	SCREW, mach: Phillips drive; RH; steel, cad pl; No. 10–32; 1 in lg (Att. Pt.)	2	
–154	AN936B10B	—	WASHER, lock: bronze, tinned; round, No. 10; shakeproof-type, tw ext teeth (Att. Pt.)	4	
–155	AN345–10	—	NUT, hex: steel, cad pl; No. 10–32 (Att. Pt.)	2	
–156	K7003796P2	—	GASKET	1	
–157	TRL–86005	E21009	WAVE GUIDE ASSEMBLY CG–875/CPS–6B (Technicraft Laboratories)	1	
–158	AN520–10R10	—	SCREW, mach: Phillips drive; RH; steel, cad pl; No. 10–32; 5/8 in lg (Att. Pt.)	2	
–159	AN520–10R16	—	SCREW, mach: Phillips drive; RH; steel, cad pl; No. 10–32; 1 in lg (Att. Pt.)	2	
–160	AN936B10B	—	WASHER, lock: bronze, tinned; round, No. 10; shakeproof-type, tw ext teeth (Att. Pt.)	4	
–161	AN960–10	—	WASHER, flat: steel, cad pl; No. 10 (Att. Pt.)	2	
–162	AN345–10	—	NUT, hex: steel, cad pl; No. 10–32 (Att. Pt.)	2	
–163	K7003796P2	—	GASKET	1	
–164	ML7603811G1	E21008	FREQUENCY MIXER STAGE CV–218/CPS–6B (See Figure 125 for breakdown)	1	
–165	AN515–8R12	—	SCREW, mach: Phillips drive; RH; steel, cad pl; No. 8–32; 3/4 in lg (Att. Pt.)	4	
–166	AN936B8B	—	WASHER, lock: bronze, tinned; round, No. 8; shakeproof-type, tw ext teeth (Att. Pt.)	4	
–167	PL7705989G1	—	IF AMPLIFIER AM–623/CPS–6B (See Figure 126 for breakdown)	1	
–168	AN515–8R5	—	SCREW, mach: Phillips drive; RH; steel, cad pl; No. 8–32; 5/16 in lg (Att. Pt.)	2	
–169	AN936B8B	—	WASHER, lock: bronze, tinned; round, No. 8; shakeproof-type, tw ext teeth (Att. Pt.)	2	
–170	A7018158	—	BRACKET	1	
–171	AN520–10R7	—	SCREW, mach: Phillips drive; RH; steel, cad pl; No. 10–32; 7/16 in lg (Att. Pt.)	2	
–172	AN936B10B	—	WASHER, lock: bronze, tinned; round, No. 10; shakeproof-type, tw ext teeth (Att. Pt.)	2	
–173	PL7018159G1	—	BRACKET	1	
–174	AN515–416R12	—	SCREW, mach: Phillips drive; RH; steel, cad pl; 1/4 in–20; 3/4 in lg (Att. Pt.)	2	
–175	AN936B416B	—	WASHER, lock: bronze, tinned; round, 1/4 in; shakeproof-type, tw ext teeth (Att. Pt.)	2	
–176	AN340–416	—	NUT, hex: steel, cad pl; 1/4 in–20 (Att. Pt.)	2	
–177	A7021903P1	—	BRACKET	1	
–178	AN520–10R14	—	SCREW, mach: Phillips drive; RH; steel, cad pl; No. 10–32; 7/8 in lg (Att. Pt.)	2	
–179	AN936B10B	—	WASHER, lock: bronze, tinned; round, No. 10; shakeproof-type, tw ext teeth (Att. Pt.)	2	
–180	AN345–10	—	NUT, hex: steel, cad pl; No. 10–32 (Att. Pt.)	2	
–181	A7021901P1	—	BRACKET	1	
182	A7019468P1	—	BRACKET	1	
–183	AN520–10R10	—	SCREW, mach: Phillips drive; RH; steel, cad pl; No. 10–32; 5/8 in lg (Att. Pt. for items 181 and 182)	4	
–184	AN936B10B	—	WASHER, lock: bronze, tinned; round, No. 10; shakeproof-type, tw ext teeth (Att. Pt. for items 181 and 182)	4	
–185	PL7019466G1	—	PLATE, anchor (Att. Pt. for items 181 and 182)	2	
–186	A7019467P1	—	BRACKET	1	
–187	AN520–10R6	—	SCREW, mach: Phillips drive; RH; steel, cad pl; No. 10–32; 3/8 in lg (Att. Pt.)	2	
–188	AN936B10B	—	WASHER, lock: bronze, tinned; round, No. 10; shakeproof-type, tw ext teeth (Att. Pt.)	2	
–189	A7021902P1	—	BRACKET	1	
–190	AN520–10R10	—	SCREW, mach: Phillips drive; RH; steel, cad pl; No. 10–32; 5/8 in lg (Att. Pt.)	2	
–191	AN936B10B	—	WASHER, lock: bronze, tinned; round, No. 10; shakeproof-type, tw ext teeth (Att. Pt.)	2	
–192	AN345–10	—	NUT, hex: steel, cad pl; No. 10–32 (Att. Pt.)	2	
–193	ML7004274G5	W21001	CLIP (Includes R21001)	1	
–194	PL7706388G1	—	FORK-BOOM (See Figure 127 for breakdown)	1	
–195	AN515B416R10	—	SCREW, mach: Phillips drive; RH; brass, black oxidized; 1/4 in–20; 5/8 in lg (Att. Pt.)	1	
–196	AN936B416B	—	WASHER, lock: bronze, tinned; round, 1/4 in; shakeproof-type, tw ext teeth (Att. Pt.)	1	
–197	AN505–416R8	—	SCREW, mach: Phillips drive; FH; steel, cad pl; 1/4 in–20; 1/2 in lg (Att. Pt.)	2	
–198	A7021947P1	—	BRACKET	1	
–199	AN515–8R10	—	SCREW, mach: Phillips drive; RH; steel, cad pl; No. 8–32; 5/8 in lg (Att. Pt.)	2	
–200	Coml	—	WASHER, flat: brass, cad pl; round, 0.188 in ID, 0.375 in OD, 0.040 in the (Att. Pt.) (Wrought Washer)	2	
–201	AN936B8B	—	WASHER, lock: bronze, tinned; round, No. 8; shakeproof-type, tw ext teeth (Att. Pt.)	2	
–202	AN340–8	—	NUT, hex: steel, cad pl; No. 8–32 (Att. Pt.)	2	
–203	A7021944P1	—	TOOL, duplexer	1	
–204	A7019407P2	—	CLIP	1	
–205	A7019408P1	—	SCREW, thumb (Att. Pt.)	1	

FIG. & INDEX NO.	PART NUMBER	REF SYMBOL	NOMENCLATURE 1 2 3 4 5 6 7	UNITS PER ASSY	APPLI-CATION
			RADAR SET GROUP OA–345/CPS–6B (Cont)		
101–	PL7013798G1	—	. SCREW, thumb	1	
–206	AN515–6R4	—	. SCREW, mach: Phillips drive; RH; steel, cad pl; No. 6–32; 1/4 in lg (Att. Pt.)	1	
–207	AN936A6B	—	. Washer, lock: bronze, tinned; round, No. 6; shakeproof-type, tw int teeth (Att. Pt.)	1	
–208	K7108913P1	—	. . CHAIN	1	
–209	AN515–6R4	—	. . SCREW, mach: Phillips drive; RH; steel, cad pl; No. 6–32; 1/4 in lg (Att. Pt.)	1	
–210	AN936A6B	—	. . WASHER, lock: bronze, tinned; round, No. 6; shakeproof-type, tw int teeth (Att. Pt.)	1	
–211	A7013798P2	—	. . SCREW, thumb	1	
–212	W3150	—	. WRENCH (Amco Metal)	1	
–213	A7013799P1	—	. POST, supporting	1	
–214	AN515–416R10	—	. SCREW, mach: Phillips drive; RH; steel, cad pl; 1/4 in–20; 5/8 in lg (Att. Pt.)	1	
–215	AN936B416B	—	. WASHER, lock: bronze, tinned; round, 1/4 in; shakeproof-type, tw ext teeth (Att. Pt.)	1	
–216	A7013872P1	—	. SCREW, mach	1	
–217	ML7603893G1	—	. SWITCH PANEL (See Figure 128 for breakdown)	1	
–218	K7133513P10	—	. SLEEVE, spacer: 9/16 in lg	1	
–219	AN510–10R18	—	. SCREW, mach: Phillips drive; FH; steel, cad pl; No. 10–32; 1-1/8 in lg (Att. Pt. for items 217 and 218)	1	
–220	AN510–10R8	—	. SCREW, mach: Phillips drive; FH; steel, cad pl; No. 10–32; 1/2 in lg (Att. Pt. for items 217 and 218)	10	
–221	AN936B10B	—	. WASHER, lock: bronze, tinned; round, No. 10; shakeproof-type, tw ext teeth (Att. Pt. for items 217 and 218)	11	
–222	AN340–10	—	. NUT, hex: steel, cad pl; No. 10–32 (Att. Pt. for items 217 and 218)	11	
–223	ML7664492G1	—	. POWER SUPPLY PP–460/CPS–6B (See Figure 27 for breakdown)	1	
–224	AN520–10R6	—	. SCREW, mach: Phillips drive; RH; steel, cad pl; No. 10–32; 3/8 in lg (Att. Pt.)	8	
–225	AN936B10B	—	. WASHER, lock: bronze, tinned; round, No. 10; shakeproof-type, tw ext teeth (Att. Pt.)	8	
–226	AN345–10	—	. NUT, hex: steel, cad pl; No. 10–32 (Att. Pt.)	8	
–227	6RS5HB54	CR21004	. RECTIFIER, metallic (GE)	1	
–228	Coml	—	. SCREW, cap: hex head; brass, cad pl; 3/8 in–16; 5/8 in lg (Att. Pt.) (Amer Screw)	2	
–229	AN936B616B	—	. WASHER, lock: bronze, tinned; round, 3/8 in; shakeproof-type, tw ext teeth (Att. Pt.)	2	
–230	AN340–616	—	. NUT, hex: steel, cad pl; 3/8 in–16 (Att. Pt.)	2	
–231	7481560	T21001	. TRANSFORMER, power (GE)	1	
–232	Coml	—	. SCREW, cap: hex head; brass, cad pl; 3/8 in–16; 5/8 in lg (Att. Pt.)	4	
–233	AN936B616B	—	. WASHER, lock: bronze, tinned; round, 3/8 in; shakeproof-type, tw ext teeth (Att. Pt.)	4	
–234	AN340–616	—	. NUT, hex: steel, cad pl; 3/8 in–16 (Att. Pt.)	4	
–235	RX1240	K21002	. RELAY, armature (Sig Eng)	1	
–236	AN520–10R6	—	. SCREW, mach: Phillips drive; RH; steel, cad pl; No. 10–32; 3/8 in lg (Att. Pt.)	6	
–237	AN936B10B	—	. WASHER, lock: bronze, tinned; round, No. 10; shakeproof-type, tw ext teeth (Att. Pt.)	6	
–238	AN345–10	—	. NUT, hex: steel, cad pl; No. 10–32 (Att. Pt.)	6	
–239	M7403529P1	—	. CLEANER, air	1	
–240	ST52N	S21005	. SWITCH, toggle	1	
–241	Coml	—	. WASHER, lock: bronze, cad pl; round, 15/32 in; shakeproof-type, tw ext teeth (Att. Pt.) (Shakeproof)	1	
–242	A7019719P1	—	. BRACKET	1	
–243	AN510–10R10	—	. SCREW, mach: Phillips drive; FH; steel, cad pl; No. 10–32; 5/8 in lg (Att. Pt.)	2	
–244	AN936B10B	—	. WASHER, lock: bronze, tinned; round, No. 10; shakeproof-type, tw ext teeth (Att. Pt.)	2	
–245	AN345–10	—	. NUT, hex: steel, cad pl; No. 10–32 (Att. Pt.)	2	
–246	ML7460330G2	S21004A	. SWITCH, interlock	1	
–247	AN515–6R20	—	. SCREW, mach: Phillips drive; RH; steel, cad pl; No. 6–32; 1-1/4 in lg (Att. Pt.)	2	
–248	AN936B6B	—	. WASHER, lock: bronze, tinned; round, No. 6; shakeproof-type, tw ext teeth (Att. Pt.)	2	
–249	AN340–6	—	. NUT, hex: steel, cad pl; No. 6–32 (Att. Pt.)	2	
–250	A7013564P1	—	. BRACKET	1	
–251	AN520–10R14	—	. SCREW, mach: Phillips drive; RH; steel, cad pl; No. 10–32; 7/8 in lg (Att. Pt.)	2	
–252	Coml	—	. WASHER, flat: brass, cad pl; round, 0.203 in ID, 0.562 in OD, 0.040 in thk (Att. Pt.) (Wrought Washer)	2	
–253	AN936B10B	—	. WASHER, lock: bronze, tinned; round, No. 10; shakeproof-type, tw ext teeth (Att. Pt.)	2	
–254	AN345–10	—	. NUT, hex: steel, cad pl; No. 10–32 (Att. Pt.)	2	
–255	NP157688	—	. PLATE, identification	1	
–256	NP157709	—	. PLATE, identification	1	
–257	AN515–4R4	—	. SCREW, mach: Phillips drive; RH; steel, cad pl; No. 4–40; 1/4 in lg (Att. Pt. for items 255 and 256)	8	
–258	AN936A4B	—	. WASHER, lock: bronze, tinned; round, No. 4; shakeproof-type, tw int teeth (Att. Pt. for items 255 and 256)	8	
–259	NP157555B	—	. PLATE, identification	1	
–260	NP157562B	—	. PLATE, identification	1	
–261	Coml	—	. SCREW, self-tapping: Phillips drive; pan head; SS; tinned; No. 4–40; 1/4 in lg (Att. Pt. for items 259 and 260) (Shakeproof)	8	

FIG. & INDEX NO.	PART NUMBER	REF SYMBOL	NOMENCLATURE 1 2 3 4 5 6 7	UNITS PER ASSY	APPLI-CATION
			RADAR SET GROUP OA–345/CPS–6B (Cont)		
101–262	AN3106–12S3S	P21411	. CONNECTOR, plug	1	
–263	NP154192P	—	. MARKER, cable	1	
–264	AN3108A–10SL4S	P22001	. CONNECTOR, plug	1	
–265	NP156432R	—	. MARKER, cable	1	
–266	AN3057–4	—	. CLAMP	2	
–267	AN3106–14S5S	P21902	. CONNECTOR, plug	1	
–268	NP154196J	—	. MARKER, cable	1	
–269	AN3057–6	—	. CLAMP	1	
–270	AN3106–16S1P	P21603	. CONNECTOR, plug	1	
–271	NP154196G	—	. MARKER, cable	1	
–272	AN3106–16S1S	P21501	. CONNECTOR, plug	1	
–273	NP154196D	—	. MARKER, cable	1	
–274	AN3106–16–10S	P3501	. CONNECTOR, plug	1	
–275	NP137426D	—	. MARKER, cable	1	
–276	AN3106–16–10S	P21011	. CONNECTOR, plug	1	
–277	NP154192G	—	. MARKER, cable	1	
–278	AN3057–8	—	. CLAMP	4	
–279	AN3106–18–16P	P3502	. CONNECTOR, plug	1	
–280	NP137426E	—	. MARKER, cable	1	
–281	AN3057–10	—	. CLAMP	1	
–282	AN3106–22–19S	P21304	. CONNECTOR, plug	1	
–283	NP154197C	—	. MARKER, cable	1	
–284	AN3106A–22–18S	P21601	. CONNECTOR, plug	1	
–285	NP154196F	—	. MARKER, cable	1	
–286	AN3106–22–19P	P21613	. CONNECTOR, plug	1	
–287	NP154197F	—	. MARKER, cable	1	
–288	AN3106A–22–18P	P21901	. CONNECTOR, plug	1	
–289	NP154196H	—	. MARKER, cable	1	
–290	AN3057–12	—	. CLAMP	4	
–291	AN3106A–28–2S	P21602	. CONNECTOR, plug	1	
–292	NP154197E	—	. MARKER, cable	1	
–293	AN3106A–28–2P	P21102	. CONNECTOR, plug	1	
–294	NP154197B	—	. MARKER, cable	1	
–295	AN3106A–28–2S	P21101	. CONNECTOR, plug	1	
–296	NP154197A	—	. MARKER, cable	1	
–297	AN3106–28–19S	P21410	. CONNECTOR, plug	1	
–298	NP154197D	—	. MARKER, cable	1	
–299	AN3106–28–20S	P21418	. CONNECTOR, plug	1	
–300	NP156623A	—	. MARKER, cable	1	
–301	AN3057–14	—	. CLAMP	5	
	ML7014140G1	W21012	. CABLE ASSEMBLY, RF	1	
–302	RG5/U	—	. . CABLE, RF: 24–1/2 in lg	1	
–303	UG18/U	P21009	. . CONNECTOR, plug	1	
–304	UG18/U	P21302	. . CONNECTOR, plug	1	
–305	NP154196A	—	. . MARKER, cable	1	
–306	NP154196B	—	. . MARKER, cable	1	
–307	NP154196L	—	. . MARKER, cable	1	
	ML7014139G1	W21011	. CABLE ASSEMBLY, RF	1	
–308	RG5/U	—	. . CABLE, RF: 44 in lg	1	
–309	UG18/U	P21506	. . CONNECTOR, plug	1	
–310	UG18/U	P21303	. . CONNECTOR, plug	1	
–311	NP154196E	—	. . MARKER, cable	1	
–312	NP154196C	—	. . MARKER, cable	1	
–313	NP154196K	—	. . MARKER, cable	1	
	ML7014133G1	W21005	. CABLE ASSEMBLY, RF	1	
–314	RG59/U	—	. . CABLE, RF: 110–3/4 in lg	1	
–315	UG260/U	P21007B	. . CONNECTOR, plug	1	
–316	UG260/U	P21612	. . CONNECTOR, plug	1	
–317	NP154192E	—	. . MARKER, cable	1	
–318	NP154192X	—	. . MARKER, cable	1	
–319	NP154195D	—	. . MARKER, cable	1	
	ML7014134G1	W21006	. CABLE ASSEMBLY, RF	1	
–320	RG59/U	—	. . CABLE, RF: 113–1/4 in lg	1	
–321	UG260/U	P21006B	. . CONNECTOR, plug	1	
–322	UG260/U	P21611	. . CONNECTOR, plug	1	
–323	NP154192D	—	. . MARKER, cable	1	
–324	NP154192W	—	. . MARKER, cable	1	
–325	NP154195E	—	. . MARKER, cable	1	
	ML7014130G1	W21002	. CABLE ASSEMBLY, RF	1	
–326	RG59/U	—	. . CABLE, RF: 47-1/2 in lg	1	
–327	UG260/U	P21005B	. . CONNECTOR, plug	1	
–328	UG260/U	P21401	. . CONNECTOR, plug	1	
–329	NP154192B	—	. . MARKER, cable	1	
–330	NP154192L	—	. . MARKER, cable	1	
–331	NP154195A	—	. . MARKER, cable	1	
	ML7014135G1	W21007	. CABLE ASSEMBLY, RF	1	
–332	RG59/U	—	. . CABLE, RF: 140 in lg	1	
–333	UG260/U	P21005C	. . CONNECTOR, plug	1	

FIG. & INDEX NO.	PART NUMBER	REF SYMBOL	NOMENCLATURE 1 2 3 4 5 6 7	UNITS PER ASSY	APPLI-CATION
			RADAR SET GROUP OA–345/CPS–6B (Cont)		
101–334	UG260/U	P21610	. . CONNECTOR, plug	1	
–335	NP154192C	—	. . MARKER, cable	1	
–336	NP151716M	—	. . MARKER, cable	1	
–337	NP154195F	—	. . MARKER, cable	1	
	ML7014132G1	W21004	. CABLE ASSEMBLY, RF	1	
–338	RG59/U	—	. . CABLE, RF: 128 in lg	1	
–339	UG260/U	P21004B	. . CONNECTOR, plug	1	
–340	UG260/U	P21703	. . CONNECTOR, plug	1	
–341	NP154192A	—	. . MARKER, cable	1	
–243	NP151716J	—	. . MARKER, cable	1	
–343	NP154195C	—	. . MARKER, cable	1	
	ML7014136G1	W21008	. CABLE ASSEMBLY, RF	1	
–344	RG59/U	—	. . CABLE, RF: 71 in lg	1	
–345	UG260/U	P21502	. . CONNECTOR, plug	1	
–346	UG260/U	P21701	. . CONNECTOR, plug	1	
–347	NP154192S	—	. . MARKER, cable	1	
–348	NP154192Y	—	. . MARKER, cable	1	
–349	NP154195G	—	. . MARKER, cable	1	
	ML7014137G1	W21009	. CABLE ASSEMBLY, RF	1	
–350	RG59/U	—	. . CABLE, RF: 71 in lg	1	
–351	UG260/U	P21505	. . CONNECTOR, plug	1	
–352	UG260/U	P21702	. . CONNECTOR, plug	1	
–353	NP154192T	—	. . MARKER, cable	1	
–354	NP154192Z	—	. . MARKER, cable	1	
–355	NP154195H	—	. . MARKER, cable	1	
	ML7014142G1	W21014	. CABLE ASSEMBLY, RF	1	
–356	RG59/U	—	. . CABLE, RF: 133-3/4 in lg	1	
–357	UG260/U	P21402	. . CONNECTOR, plug	1	
–358	UG260/U	P21704	. . CONNECTOR, plug	1	
–359	NP154192M	—	. . MARKER, cable	1	
–360	NP151716K	—	. . MARKER, cable	1	
–361	NP154195L	—	. . MARKER, cable	1	
	ML7014131G1	W21003	. CABLE ASSEMBLY, RF	1	
–362	RG59/U	—	. . CABLE, RF: 89-1/2 in lg	1	
–363	UG260/U	P21103	. . CONNECTOR, plug	1	
–364	UG260/U	P21404	. . CONNECTOR, plug	1	
–365	NP154192H	—	. . MARKER, cable	1	
–366	NP154192N	—	. . MARKER, cable	1	
–367	NP154195B	—	. . MARKER, cable	1	
	ML7014138G1	W21010	. CABLE ASSEMBLY, RF	1	
–368	RG59/U	—	. . CABLE, RF: 88 in lg	1	
–369	UG260/U	P21108	. . CONNECTOR, plug	1	
–370	UG260/U	P21415	. . CONNECTOR, plug	1	
–371	NP154192J	—	. . MARKER, cable	1	
–372	NP154192R	—	. . MARKER, cable	1	
–373	NP154195J	—	. . MARKER, cable	1	
	ML7014141G1	W21013	. CABLE ASSEMBLY, RF	1	
–374	RG71/U	—	. . CABLE, RF: 20 in lg	1	
–375	UG260/U	P21010	. . CONNECTOR, plug	1	
–376	UG260/U	P21301	. . CONNECTOR, plug	1	
–377	NP154192F	—	. . MARKER, cable	1	
–378	NP154192K	—	. . MARKER, cable	1	
–379	NP154195K	—	. . MARKER, cable	1	
			RECEIVER TRANSMITTER CASE CY–1120/CPS–6B		
102–	PL7301656G1	—	. RECEIVER TRANSMITTER CASE CY–1120/CPS–6B (See Figure 101–2 for next higher assembly)	Ref	
–1	No Number	—	. . FRAME (A7017076P1, A7017077P1, A7017078P1, E7301656P29, P42, P46, P47, P95, P105, P118, C7706355P1, P2, P3, C7706356P1, P2, C7706357P1 thru P4, C7706358P1, P2, P3, C7706359P1, P2, C7706360P1, P2, P3, C7706361P1 thru P4, C7706362P1, P2, P3 and P4, assembled)	1	
	PL7603955G1	—	. . COVER	1	
–2	AN515B416R7	—	. . SCREW, mach: Phillips drive; RH; brass, black oxidized; 1/4 in–20; 7/16 in lg (Att. Pt.)	28	
–3	AN936A416B	—	. . WASHER, lock: bronze, tinned; round, 1/4 in; shakeproof-type, tw int teeth (Att. Pt.)	28	
–4	B7412455P1	—	. . . BRACKET	1	
–5	AN520B10R8	—	. . . SCREW, mach: Phillips drive; RH; brass, black oxidized; No. 10–32; 1/2 in lg (Att. Pt.)	9	
–6	AN936B10B	—	. . . WASHER, lock: bronze, tinned; round, No. 10; shakeproof-type, tw ext teeth (Att. Pt.)	9	
–7	AN345–10	—	. . . NUT, hex: steel, cad pl; No. 10–32 (Att. Pt.)	9	

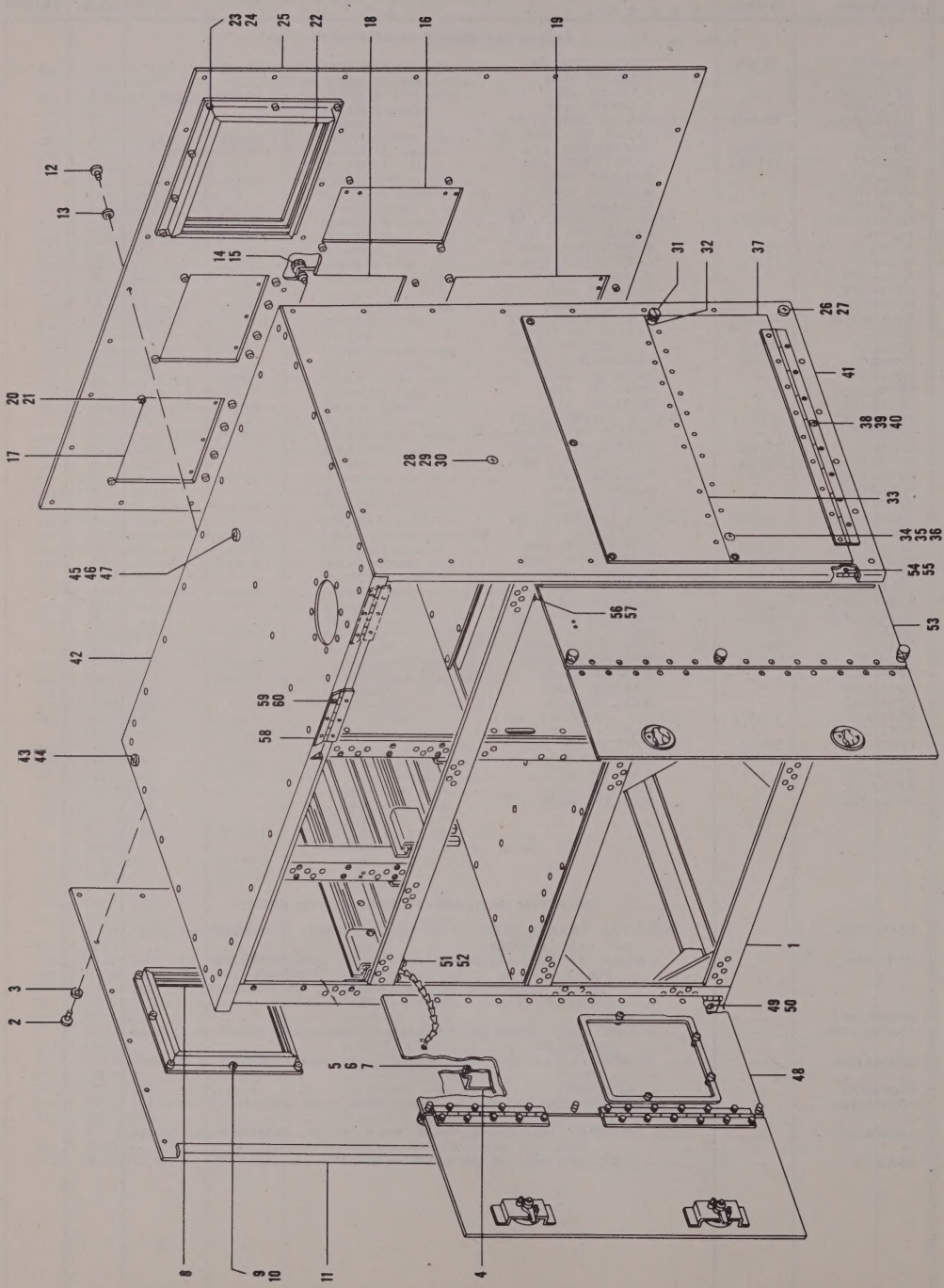

Figure 102. Receiver Transmitter Case CY–1120/CPS–6B, Front View (Sheet 1 of 3 sheets, Index Nos. 1 thru 60)

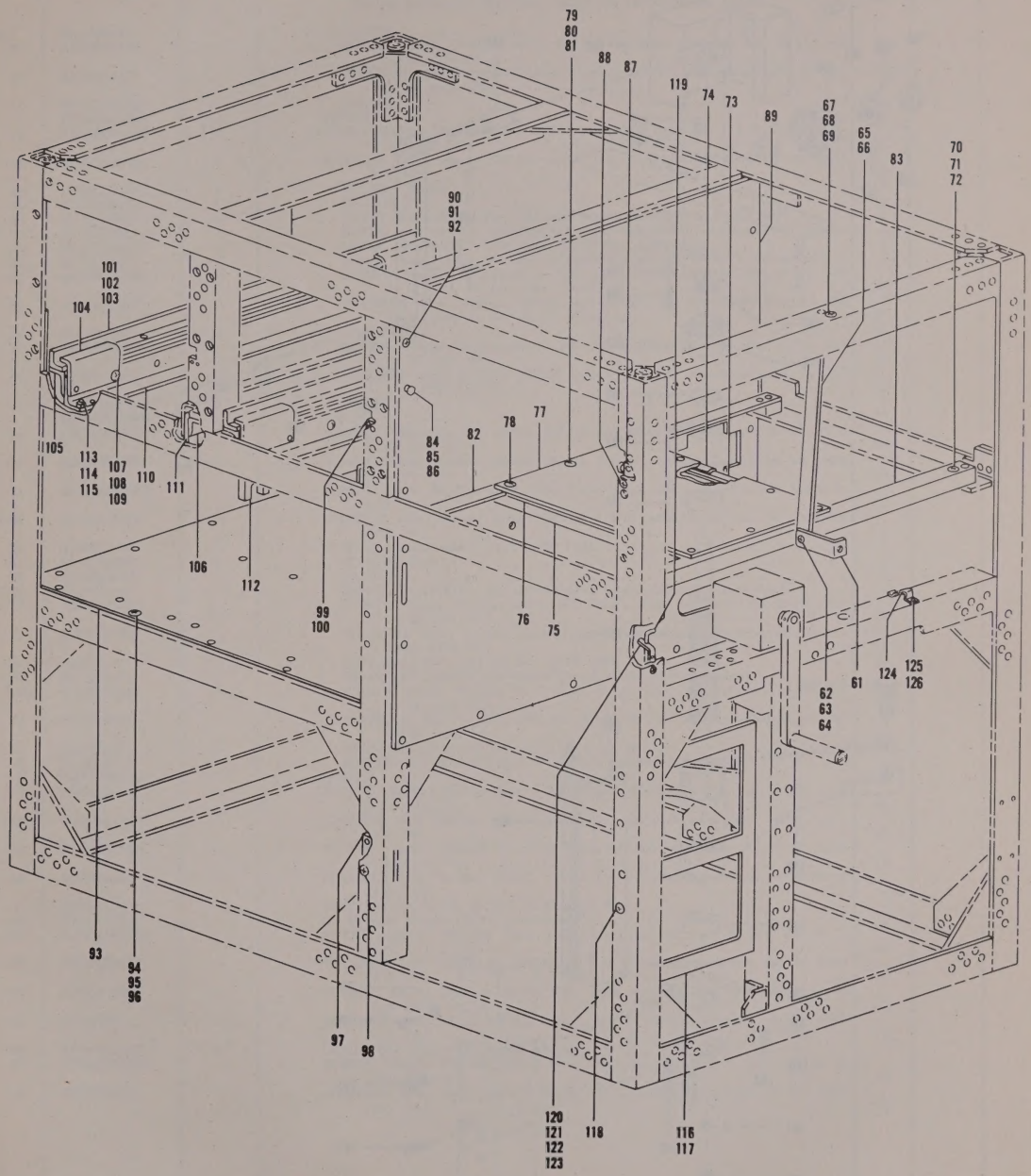

Figure 102. Receiver Transmitter Case CY–1120/CPS–6B, Front View (Sheet 2 of 3 sheets, Index Nos. 61 thru 126)

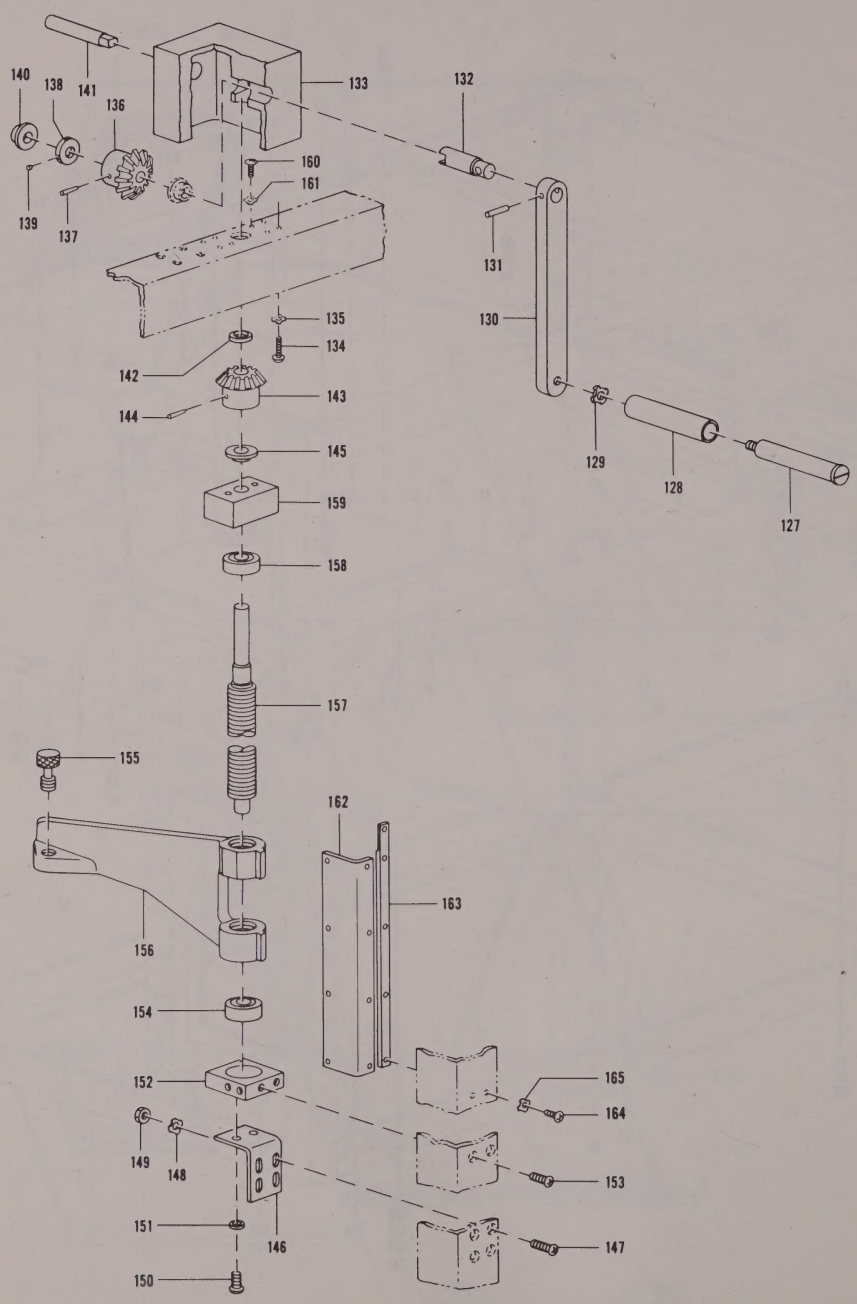

Figure 102. Receiver Transmitter Case CY–1120/CPS–6B, Partial Front View (Sheet 3 of 3 sheets, Index Nos. 127 thru 165)

FIG. & INDEX NO.	PART NUMBER	REF SYMBOL	NOMENCLATURE 1 2 3 4 5 6 7	UNITS PER ASSY	APPLI-CATION
			RECEIVER-TRANSMITTER CASE CY–1120/CPS–6B (Cont)		
102–8	B7410554P1	—	. . . FRAME	1	
–9	AN520B10R8	—	. . . SCREW, mach: Phillips drive; RH; brass, black oxidized; No. 10–32; 1/2 in lg (Att. Pt.)	8	
–10	AN936A10B	—	. . . WASHER, lock: bronze, tinned; round, No. 10; shakeproof-type, tw int teeth (Att. Pt.)	8	
–11	PL7705952G1	—	. . . COVER	1	
	PL7603959G1	—	. . COVER	1	
–12	AN515B416R7	—	. . SCREW, mach: Phillips drive; RH; brass, black oxidized; 1/4 in–20; 7/16 in lg (Att. Pt.)	37	
–13	AN936A416B	—	. . WASHER, lock: bronze, tinned; round, 1/4 in; shakeproof-type, tw int teeth (Att. Pt.)	37	
–14	K7126123P4	—	. . . SCREW, thumb	12	
–15	K7128235P2	—	. . . BUSHING	12	
–16	No Number	—	. . . DOOR (A7017064P1, P2, D7603959P16 and C7705957P3, assembled)	1	
–17	No Number	—	. . . DOOR (A7017065P1, D7603959P16 and C7705967P3, assembled)	2	
–18	No Number	—	. . . DOOR (D7603959P7, P16 and C7705957P2, assembled)	1	
–19	No Number	—	. . . DOOR (A7017064P1, P2, P3, D7603959P16 and C7705957P1, assembled)	1	
–20	AN520B10R6	—	. . . SCREW, mach: Phillips drive; RH; brass, black oxidized; No. 10–32; 3/8 in lg (Att. Pt. for items 16 thru 19)	26	
–21	AN936A10B	—	. . . WASHER, lock: bronze, tinned; round, No. 10; shakeproof-type, tw int teeth (Att. Pt. for items 16 thru 19)	26	
–22	B7410558P1	—	. . . FRAME	1	
–23	AN520B10R6	—	. . . SCREW, mach: Phillips drive; RH; brass, black oxidized; No. 10–32; 3/8 in lg (Att. Pt.)	10	
–24	AN936A10B	—	. . . WASHER, lock: bronze, tinned; round, No. 10; shakeproof-type, tw int teeth (Att. Pt.)	10	
–25	D7603959P2	—	. . . COVER	1	
	PL7603956G1	—	. . COVER	1	
–26	AN515B416R7	—	. . SCREW, mach: Phillips drive; RH; brass, black oxidized; 1/4 in–20; 7/16 in lg (Att. Pt.)	24	
–27	AN936A416B	—	. . WASHER, lock: bronze, tinned; round, 1/4 in; shakeproof-type, tw int teeth (Att. Pt.)	24	
–28	AN515B416R8	—	. . SCREW, mach: Phillips drive; RH; brass, black oxidized; 1/4 in–20; 1/2 in lg (Att. Pt.)	1	
–29	AN936B416B	—	. . WASHER, lock: bronze, tinned; round, 1/4 in; shakeproof-type, tw ext teeth (Att. Pt.)	1	
–30	AN340–416	—	. . NUT, hex: steel, cad pl; 1/4 in–20 (Att. Pt.)	1	
–31	K7126123P4	—	. . . SCREW, thumb	5	
–32	K7128235P2	—	. . . BUSHING	5	
–33	No Number	—	. . . DOOR (B7410555P1, P2, D7603956P12 and C7705953P2, assembled)	1	
–34	AN520B10R6	—	. . . SCREW, mach: Phillips drive; RH; brass, black oxidized; No. 10–32; 3/8 in lg (Att. Pt.)	10	
–35	AN936B10B	—	. . . WASHER, lock: bronze, tinned; round, No. 10; shakeproof-type, tw ext teeth (Att. Pt.)	10	
–36	AN345–10	—	. . . NUT, hex: steel, cad pl; No. 10–32 (Att. Pt.)	10	
–37	No Number	—	. . . DOOR (B7410555P3, D7603956P12 and C7705953P3 assembled)	1	
–38	AN520B10R6	—	. . . SCREW, mach: Phillips drive; RH; brass, black oxidized; No. 10–32; 3/8 in lg (Att. Pt.)	8	
–39	AN936B10B	—	. . . WASHER, lock: bronze, tinned; round, No. 10; shakeproof-type, tw ext teeth (Att. Pt.)	8	
–40	AN345–10	—	. . . NUT, hex: steel, cad pl; No. 10–32 (Att. Pt.)	8	
–41	No Number	—	. . . COVER (M7483709P16 and C7705953P1 assembled)	1	
–42	PL7706354G1	—	. . COVER	1	
–43	AN515B416R7	—	. . SCREW, mach: Phillips drive; RH; brass, black oxidized, 1/4 in–20; 7/16 in lg (Att. Pt.)	30	
–44	AN936A416B	—	. . WASHER, lock: bronze, tinned; round, 1/4 in; shakeproof-type, tw int teeth (Att. Pt.)	30	
–45	AN520B10R5	—	. . SCREW, mach: Phillips drive; RH; brass, black oxidized; No. 10–32; 5/16 in lg (Att. Pt.)	4	
–46	AN936A10B	—	. . WASHER, lock: bronze, tinned; round, No. 10; shakeproof-type, tw int teeth (Att. Pt.)	4	
–47	AN345–10	—	. . NUT, hex: steel, cad pl; No. 10–32 (Att. Pt.)	4	
–48	PL7603957G1	—	. . DOOR (See Figure 103 for breakdown)	1	
–49	AN515–416R6	—	. . SCREW, mach: Phillips drive; RH; steel, cad pl; 1/4 in–20; 3/8 in lg (Att. Pt.)	12	
–50	AN936B416	—	. . WASHER, lock: steel, cad pl; round, 1/4 in; shakeproof-type, tw ext teeth (Att. Pt.)	12	
–51	AN515–8R5	—	. . SCREW, mach: Phillips drive; RH; steel, cad pl; No. 8–32; 5/16 in lg (Att. Pt.)	2	
–52	AN936B8	—	. . WASHER, lock: steel, cad pl; round, No. 8; shakeproof-type, tw ext teeth (Att. Pt.)	2	
–53	PL7603958G1	—	. . DOOR (See Figure 104 for breakdown)	1	
–54	AN515–416R6	—	. . SCREW, mach: Phillips drive; RH; steel, cad pl; 1/4 in–20; 3/8 in lg (Att. Pt.)	12	
–55	AN936B416	—	. . WASHER, lock: steel, cad pl; round, 1/4 in; shakeproof-type, tw ext teeth (Att. Pt.)	12	

FIG. & INDEX NO.	PART NUMBER	REF SYMBOL	NOMENCLATURE 1 2 3 4 5 6 7	UNITS PER ASSY	APPLI-CATION
			RECEIVER-TRANSMITTER CASE CY–1120/CPS–6B (Cont)		
102–56	AN515–8R5	—	. . SCREW, mach: Phillips drive; RH; steel, cad pl; No. 8–32; 5/16 in lg (Att. Pt.)	2	
–57	AN936B8	—	. . WASHER, lock: steel, cad pl; round, No. 8; shakeproof-type, tw ext teeth (Att. Pt.)	2	
–58	E7301656P10	—	. . HINGE	2	
–59	AN520B10R7	—	. . SCREW, mach: Phillips drive; RH; brass, black oxidized; No. 10–32; 7/16 in lg (Att. Pt.)	6	
–60	AN936A10B	—	. . WASHER, lock: bronze, tinned; round, No. 10; shakeproof-type, tw int teeth (Att. Pt.)	6	
–61	A7017066P1	—	. . BRACKET	1	
–62	AN515–416R8	—	. . SCREW, mach: Phillips drive; RH; steel, cad pl; 1/4 in–20; 1/2 in lg (Att. Pt.)	1	
–63	AN936B416B	—	. . WASHER, lock: bronze, tinned; round, 1/4 in; shakeproof-type, tw ext teeth (Att. Pt.)	1	
–64	AN340–416	—	. . NUT, hex: steel, cad pl; 1/4 in–20 (Att. Pt.)	1	
–65	B7410564P1	—	. . BRACKET	1	
–66	AN515–416R10	—	. . SCREW, mach: Phillips drive; RH; steel, cad pl; 1/4 in–20; 5/8 in lg (Att. Pt.)	1	
–67	AN505–416R8	—	. . SCREW, mach: Phillips drive; FH; steel, cad pl; 1/4 in–20; 1/2 in lg (Att. Pt.)	2	
–68	AN936B416	—	. . WASHER, lock: steel, cad pl; round, 1/4 in; shakeproof-type, tw ext teeth (Att. Pt.)	3	
–69	AN340–416	—	. . NUT, hex: steel, cad pl; 1/4 in–20 (Att. Pt.)	3	
	PL7705958G1	—	. . SHELF, mounting	1	
–70	AN515–416R24	—	. . SCREW, mach: Phillips drive; RH; steel, cad pl; 1/4 in–20; 2 in lg (Att. Pt.)	8	
–71	AN936B416	—	. . WASHER, lock: steel, cad pl; round, 1/4 in; shakeproof-type, tw ext teeth (Att. Pt.)	8	
–72	AN340–416	—	. . NUT, hex: steel, cad pl; 1/4 in–20 (Att. Pt.)	8	
–73	No Number	—	. . . BRACKET (B7410561P3 and C7705958P15 assembled)	1	
–74	B7410562P1	—	. . . SHIM	1	
–75	No Number	—	. . . BRACKET (B7410561P4 and C7705958P15 assembled)	1	
–76	B7410562P2	—	. . . SHIM	1	
–77	No Number	—	. . . PLATE, mounting (B7410560P1 and C7705958P11 assembled)	1	
–78	AN515–416R14	—	. . . SCREW, mach: Phillips drive; RH; steel, cad pl; 1/4 in–20; 7/8 in lg (Att. Pt. for items 73 thru 77)	8	
–79	AN515–416R10	—	. . . SCREW, mach: Phillips drive; RH; steel, cad pl; 1/4 in–20; 5/8 in lg (Att. Pt. for items 73, 75 and 77)	2	
–80	AN936B416B	—	. . . WASHER, lock: bronze, tinned; round, 1/4 in; shakeproof-type, tw ext teeth (Att. Pt. for items 73 thru 77)	10	
–81	AN340–416	—	. . . NUT, hex: steel, cad pl; 1/4 in–20 (Att. Pt. for items 73 thru 77)	10	
–82	No Number	—	. . . BRACKET (B7410561P2 and C7705958P10 assembled)	1	
–83	No Number	—	. . . BRACKET (B7410561P1 and C7705958P10 assembled)	1	
–84	A7017082P1	—	. . SCREW, mach	2	
–85	AN936A10	—	. . WASHER, lock: steel, cad pl; round, No. 10; shakeproof-type, tw int teeth (Att. Pt.)	1	
–86	AN345–10	—	. . NUT, hex: steel, cad pl; No. 10–32 (Att. Pt.)	1	
–87	A7017081P1	—	. . BLOCK, support	1	
–88	AN510–10R14	—	. . SCREW, mach: Phillips drive; FH; steel, cad pl; No. 10–32; 7/8 in lg (Att. Pt.)	2	
–89	PL7706353G1	—	. . PLATE, mounting	1	
–90	AN520–10R7	—	. . SCREW, mach: Phillips drive; RH; steel, cad pl; No. 10–32; 7/16 in lg (Att. Pt.)	17	
–91	AN936B10B	—	. . WASHER, lock: bronze, tinned; round, No. 10; shakeproof-type, tw ext teeth (Att. Pt.)	17	
–92	AN345–10	—	. . NUT, hex: steel, cad pl; No. 10–32 (Att. Pt.)	17	
–93	PL7706350G1	—	. . CHASSIS	1	
–94	AN510–10R10	—	. . SCREW, mach: Phillips drive; FH; steel, cad pl; No. 10–32; 5/8 in lg (Att. Pt.)	28	
–95	AN936B10	—	. . WASHER, lock: steel, cad pl; round, No. 10; shakeproof-type, tw ext teeth (Att. Pt.)	28	
–96	AN345–10	—	. . NUT, hex: steel, cad pl; No. 10–32 (Att. Pt.)	28	
–97	A7017071P1	—	. . BRACKET	2	
–98	AN510–10R6	—	. . SCREW, mach: Phillips drive; FH; steel, cad pl; No. 10–32; 3/8 in lg (Att. Pt.)	4	
–99	K7005838P1	—	. . BLOCK, stop	2	
–100	AN510–6R6	—	. . SCREW, mach: Phillips drive; FH; steel, cad pl; No. 6–32; 3/8 in lg (Att. Pt.)	4	
–101	A7017072P1	—	. . SLIDE, drawer	4	
–102	AN520–10R8	—	. . SCREW, mach: Phillips drive; RH; steel, cad pl; No. 10–32; 1/2 in lg (Att. Pt.)	36	
–103	AN936B10B	—	. . WASHER, lock: bronze, tinned; round, No. 10; shakeproof-type, tw ext teeth (Att. Pt.)	36	
–104	A7017073P1	—	. . GUIDE, drawer	8	
–105	B7410565P4	—	. . BRACKET	3	
–106	B7410565P2	—	. . BRACKET	1	
–107	AN515–416R12	—	. . SCREW, mach: Phillips drive; RH; steel, cad pl; 1/4 in–20; 3/4 in lg (Att. Pt. for items 104, 105 and 106)	36	

FIG. & INDEX NO.	PART NUMBER	REF SYMBOL	1 2 3 4 5 6 7 NOMENCLATURE	UNITS PER ASSY	APPLI-CATION
			RECEIVER TRANSMITTER CASE CY–1120/CPS–6B (Cont)		
102–108	AN936B416	—	. . WASHER, lock: steel, cad pl; round, 1/4 in; shakeproof-type, tw ext teeth (Att. Pt. for items 104, 105 and 106)	36	
–109	AN340–416	—	. . NUT, hex: steel, cad pl; 1/4 in–20 (Att. Pt. for items 104, 105 and 106)	36	
–110	B7410565P3	—	. . BRACKET	3	
–111	B7410565P1	—	. . BRACKET	1	
–112	A7017079P1	—	. . BRACKET	1	
–113	AN515–416R12	—	. . SCREW, mach: Phillips drive; RH; steel, cad pl; 1/4 in–20; 3/4 in lg (Att. Pt. for items 110, 111 and 112)	16	
–114	AN936B416	—	. . WASHER, lock: steel, cad pl; round, 1/4 in; shakeproof-type, tw ext teeth (Att. Pt. for items 110, 111 and 112)	16	
–115	AN340–416	—	. . NUT, hex: steel, cad pl; 1/4 in–20 (Att. Pt. for items 110, 111 and 112)	14	
–116	No Number	—	. . PLATE, reinforcing (E7301656P76 and B7410566P1 assembled)	1	
–117	AN510–10R12	—	. . SCREW, mach: Phillips drive; FH; steel, cad pl; No. 10–32; 3/4 in lg (Att. Pt.)	4	
–118	AN510–10R10	—	. . SCREW, mach: Phillips drive; FH; steel, cad pl; No. 10–32; 5/8 in lg (Att. Pt.)	8	
–119	K7876451P1	—	. . WRENCH	1	
–120	K7126174P1	—	. . HOLDER, wrench	1	
–121	AN505–4R6	—	. . SCREW, mach: Phillips drive; FH; steel, cal pl; No. 4–40; 3/8 in lg (Att. Pt.)	2	
–122	AN936B4B	—	. . WASHER, lock: bronze, tinned; round, No. 4; shakeproof-type, tw ext teeth (Att. Pt.)	2	
–123	AN340–4	—	. . NUT, hex: steel, cad pl; No. 4–40 (Att. Pt.)	2	
–124	A7017080P1	—	. . CLIP	1	
–125	AN520–10R6	—	. . SCREW, mach: Phillips drive; RH; steel, cad pl; No. 10–32; 3/8 in lg (Att. Pt.)	1	
–126	AN936B10	—	. . WASHER, lock: steel, cad pl; round, No. 10; shakeproof-type, tw ext teeth (Att. Pt.)	1	
–127	A7017055P1	—	. . HANDLE	1	
–128	A7017054P1	—	. . SLEEVE, handle	1	
–129	AN936B516B	—	. . WASHER, lock: bronze tinned; round, 5/16 in; shakeproof-type, tw ext teeth (Att. Pt. for items 127 and 128)	1	
–130	A7410551P1	—	. . LEVER	1	
–131	E7301656P89	—	. . PIN, dowel (Att. Pt.)	1	
–132	A7017053P1	—	. . SHAFT	1	
–133	C7705950P1	—	. . GEARCASE	1	
–134	AN515–416R12	—	. . SCREW, mach: Phillips drive; RH; steel, cad pl; 1/4 in–20; 3/4 in lg (Att. Pt.)	4	
–135	AN936B416B	—	. . WASHER, lock: bronze, tinned; round, 1/4 in; shakeproof-type, tw ext teeth (Att. Pt.)	4	
–136	L113Y	—	. . GEAR (Boston Gear)	1	
–137	M7461888P41	—	. . PIN, taper (Att. Pt.)	1	
–138	A7017057P1	—	. . COLLAR, shaft	1	
–139	Coml	—	. . SCREW, set: Bristo six-spline drive; headless; SS; cad pl; No. 8–32; 1/4 in lg; cup point (Att. Pt.) (Bristolco)	2	
–140	K7875586P1	—	. . BEARING, sleeve	2	
–141	A7017050P1	—	. . SHAFT	1	
–142	A7017059P1	—	. . BEARING, sleeve	1	
–143	L113Y	—	. . GEAR (Boston Gear)	1	
–144	M7461888P41	—	. . PIN, taper (Att. Pt.)	1	
–145	A7017058P1	—	. . BEARING, sleeve	1	
–146	A7017060P1	—	. . BRACKET	1	
–147	AN505–416R10	—	. . SCREW, mach: Phillips drive; FH; steel, cad pl; 1/4 in–20; 5/8 in lg (Att. Pt.)	4	
–148	AN936B416B	—	. . WASHER, lock: bronze, tinned; round, 1/4 in; shakeproof-type, tw ext teeth (Att. Pt.)	4	
–149	AN340–416	—	. . NUT, hex: steel, cad pl; 1/4 in–20 (Att. Pt.)	4	
–150	AN515–416R8	—	. . SCREW, mach: Phillips drive; RH; steel, cad pl; 1/4 in–20; 1/2 in lg (Att. Pt.)	2	
–151	AN936B416	—	. . WASHER, lock: bronze, tinned; round, 1/4 in; shakeproof-type, tw ext teeth (Att. Pt.)	2	
–152	A7017052P1	—	. . BLOCK, bearing	1	
–153	AN505–416R8	—	. . SCREW, mach: Phillips drive; FH; steel, cad pl; 1/4 in–20; 1/2 in lg (Att. Pt.)	2	
–154	6015–P	—	. . BEARING, ball (Norma-Hoff)	1	
–155	A7017056P1	—	. . SCREW, thumb	1	
–156	No Number	—	. . ARM (E7301656P94 and C7705951P1 assembled)	1	
–157	B7410550P1	—	. . SHAFT	1	
–158	6015–P	—	. . BEARING, ball (Norma-Hoff)	1	
–159	A7017051P1	—	. . BLOCK, bearing	1	
–160	AN515–416R8	—	. . SCREW, mach: Phillips drive; RH; steel, cad pl; 1/4 in–20; 1/2 in lg (Att. Pt.)	2	
–161	AN936B416B	—	. . WASHER, lock: bronze, tinned; round, 1/4 in; shakeproof-type, tw ext teeth (Att. Pt.)	2	
–162	B7410552P2	—	. . GUIDE, support	1	
–163	B7410552P1	—	. . GUIDE, bar	1	
–164	AN515–8R7	—	. . SCREW, mach: Phillips drive; RH; steel, cad pl; No. 8–32; 7/16 in lg (Att. Pt. for items 162 and 163)	9	
–165	AN936B8	—	. . WASHER, lock: steel, cad pl; round, No. 8; shakeproof-type, tw ext teeth (Att. Pt. for items 162 and 163)	9	

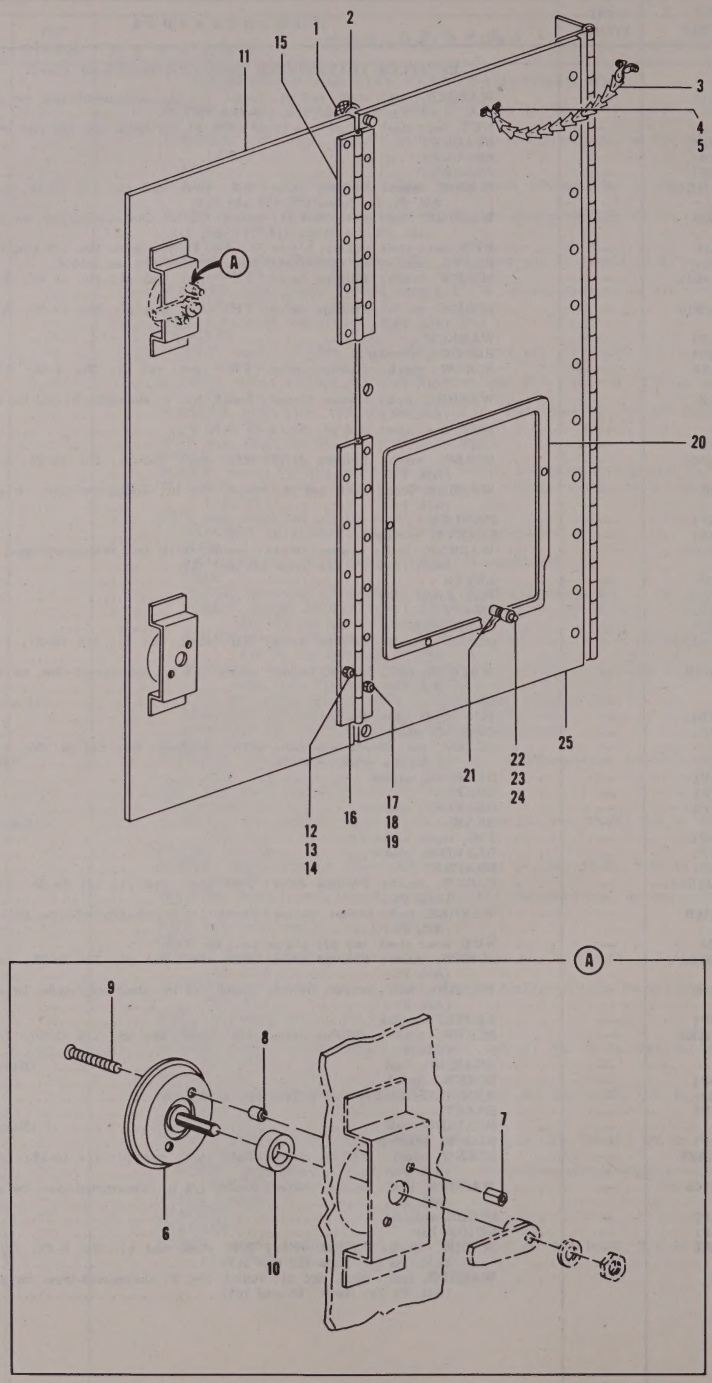

Figure 103. Door

FIG. & INDEX NO.	PART NUMBER	REF SYMBOL	NOMENCLATURE 1 2 3 4 5 6 7	UNITS PER ASSY	APPLI-CATION
			DOOR		
103–	PL7603957G1	—	. . DOOR (See Figure 102–48 for next higher assembly)	Ref	
–1	K7126123P2	—	. . . SCREW, thumb	3	
–2	K7128235P3	—	. . . BUSHING	3	
–3	K7005270P1	—	. . . CHAIN	1	
–4	AN515B8R6	—	. . . SCREW, mach: Phillips drive; RH; brass, black oxidized; No. 8–32; 3/8 in lg (Att. Pt.)	2	
–5	AN936A8B	—	. . . WASHER, lock: bronze, tinned; round, No. 8; shakeproof-type, tw int teeth (Att. Pt.)	2	
–6	M7483488P2	—	. . . HANDLE	2	
–7	M7480544P20E	—	. . . POST, spacing	4	
–8	A7017062P1	—	. . . SLEEVE, spacer	4	
–9	AN510B10R16	—	. . . SCREW, mach: Phillips drive; FH; brass, black oxidized; No. 10–32; 1 in lg (Att. Pt. for items 6, 7 and 8)	4	
–10	K7004714P1	—	. . . SLEEVE, spacer	2	
–11	No Number	—	. . . Door (D7603957P5 and C7705954P2 assembled)	1	
–12	AN520B10R7	—	. . . SCREW, mach: Phillips drive; RH; brass, black oxidized; No. 10–32; 7/16 in lg (Att. Pt.)	11	
–13	AN936B10B	—	. . . WASHER, lock: bronze, tinned; round, No. 10; shakeproof-type, tw ext teeth (Att. Pt.)	11	
–14	AN345–10	—	. . . NUT, hex: steel, cad pl; No. 10–32 (Att. Pt.)	11	
–15	B7410556P3	—	. . . HINGE	1	
–16	B7410556P2	—	. . . HINGE	1	
–17	AN520B10R7	—	. . . SCREW, mach: Phillips drive; RH; brass, black oxidized; No. 10–32; 7/16 in lg (Att. Pt. for items 15 and 16)	11	
–18	AN936B10B	—	. . . WASHER, lock: bronze, tinned; round, No. 10; shakeproof-type, tw ext teeth (Att. Pt. for items 15 and 16)	11	
–19	AN345–10	—	. . . NUT, hex: steel, cad pl; No. 10–32 (Att. Pt. for items 15 and 16)	11	
–20	M7405290P1	—	. . . FRAME	1	
–21	K7005798P1	—	. . . SLEEVE, spacer	4	
–22	AN515B8R16	—	. . . SCREW, mach: Phillips drive; RH; brass, black oxidized; No. 8–32; 1 in lg (Att. Pt. for items 20 and 21)	4	
–23	AN936A8B	—	. . . WASHER, lock: bronze, tinned; round, No. 8; shakeproof-type, tw int teeth (Att. Pt. for items 20 and 21)	4	
–24	K7005799P1	—	. . . NUT, thumb (Att. Pt. for items 20 and 21)	4	
–25	No Number	—	. . . DOOR (B7410556P1, D7603957P26 and C7705954P1 assembled)	1	

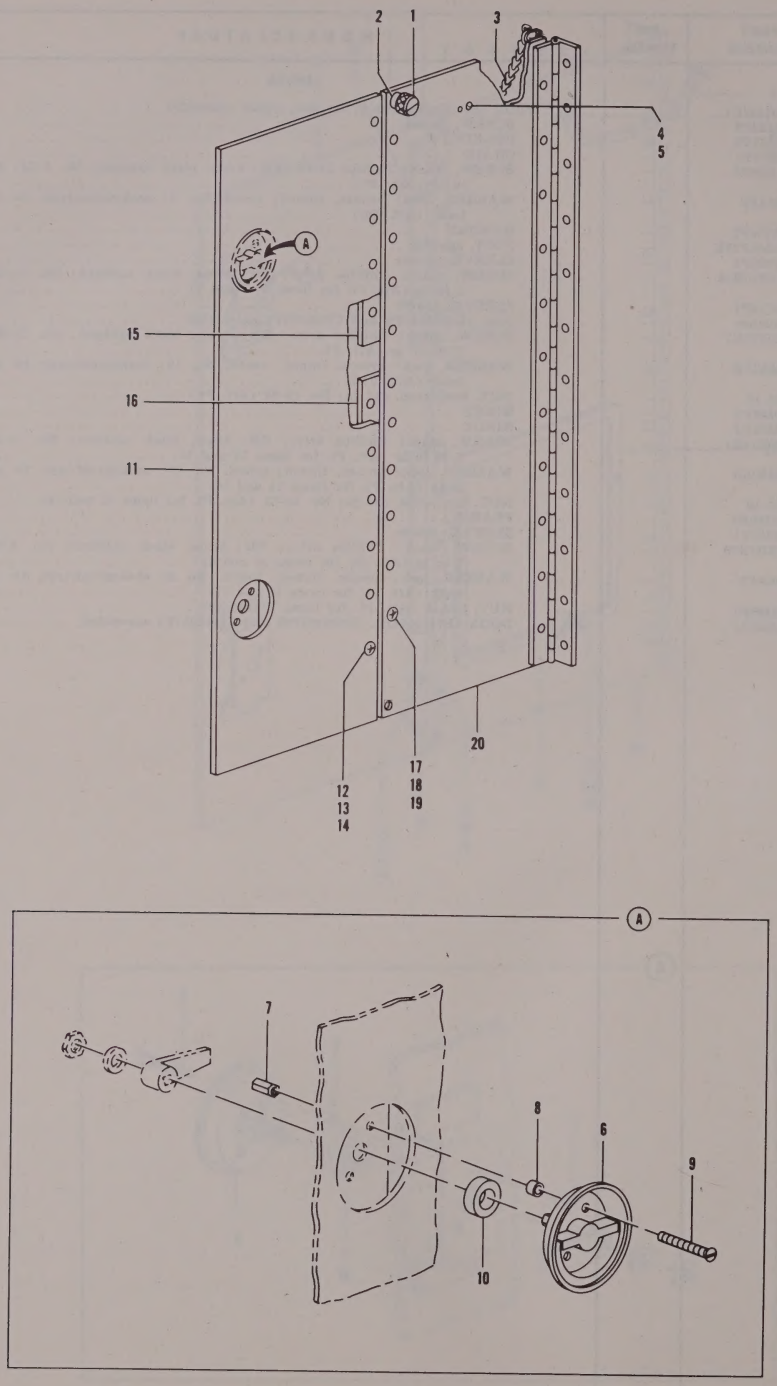

Figure 104. Door

FIG. & INDEX NO.	PART NUMBER	REF SYMBOL	NOMENCLATURE 1 2 3 4 5 6 7	UNITS PER ASSY	APPLI-CATION
			DOOR		
104–	PL7603958G1	—	. . DOOR (See Figure 102–53 for next higher assembly)	Ref	
–1	K7126123P2	—	. . . SCREW, thumb	2	
–2	K7128235P3	—	. . . BUSHING	2	
–3	K7005270P1	—	. . . CHAIN	1	
–4	AN515B8R6	—	. . . SCREW, mach: Phillips drive; RH; brass, black oxidized; No. 8–32; 3/8 in lg (Att. Pt.)	2	
–5	AN936A8B	—	. . . WASHER, lock: bronze, tinned; round, No. 8; shakeproof-type, tw int teeth (Att. Pt.)	2	
–6	M7483488P2	—	. . . HANDLE	2	
–7	M7480544P20E	—	. . . POST, spacing	4	
–8	A7017062P1	—	. . . SLEEVE, spacer	4	
–9	AN510B10R16	—	. . . SCREW, mach: Phillips drive; FH; brass, black oxidized; No. 10–32; 1 in lg (Att. Pt. for items 6, 7 and 8)	4	
–10	K7004714P1	—	. . . SLEEVE, spacer	2	
–11	No Number	—	. . . DOOR (D7603958P5 and C7705955P2 assembled)	1	
–12	AN520B10R7	—	. . . SCREW, mach: Phillips drive; RH; brass, black oxidized; No. 10–32; 7/16 in lg (Att. Pt.)	11	
–13	AN936B10B	—	. . . WASHER, lock: bronze, tinned; round, No. 10; shakeproof-type, tw ext teeth (Att. Pt.)	11	
–14	AN345–10	—	. . . NUT, hex: steel, cad pl; No. 10–32 (Att. Pt.)	11	
–15	B7410557P3	—	. . . HINGE	1	
–16	B7410557P2	—	. . . HINGE	1	
–17	AN520B10R7	—	. . . SCREW, mach: Phillips drive; RH; brass, black oxidized brass; No. 10–32; 7/16 in lg (Att. Pt. for items 15 and 16)	11	
–18	AN936B10	—	. . . WASHER, lock: steel, cad pl; round, No. 10; shakeproof-type, tw ext teeth (Att. Pt. for items 15 and 16)	11	
–19	AN345–10	—	. . . NUT, hex: steel, cad pl; No. 10–32 (Att. Pt. for items 15 and 16)	11	
–20	No Number	—	. . . DOOR (B7410557P1, D7603958P22 and C7705955P1 assembled)	1	
			POWER SUPPLY PP–759/CPS–6B		
105–	ML7300880G1	—	. POWER SUPPLY PP–759/CPS–6B (See Figure 101–2 for next higher assembly)	Ref	
–1	K7126123P1	—	. . SCREW, thumb	6	
–2	K7128235P2	—	. . BUSHING	6	
–3	No Number	—	. . CHASSIS (E7300879P1, B7407483P1 and E7300880P64 assembled)	1	
–4	K7002870P1	—	. . HANDLE	2	
–5	K7002869P1	—	. . WASHER, extruded	4	
–6	AN345–10	—	. . NUT, hex: steel, cad pl; No. 10–32 (Att. Pt. for items 4 and 5)	4	
–7	AN936B10B	—	. . WASHER, lock: bronze, tinned; round, No. 10; shakeproof-type, tw ext teeth (Att. Pt. for items 4 and 5)	4	
–8	C7704076P1	—	. . PANEL	1	
–9	AN520B10R7	—	. . SCREW, mach: Phillips drive; RH; brass, black oxidized; No. 10–32; 7/16 in lg (Att. Pt.)	4	
–9A	AN520B10R10	—	. . SCREW, mach: Phillips drive; RH; brass, black oxidized; No. 10–32; 5/8 in lg (Att. Pt.)	4	
–10	AN936B10B	—	. . WASHER, lock: bronze, tinned; round, No. 10; shakeproof-type; tw ext teeth (Att. Pt.)	8	
–11	AN345–10	—	. . NUT, hex: steel, cad pl; No. 10–32 (Att. Pt.)	8	
–12	RC20BF154J	R21931	. . RESISTOR, fixed	1	
–13	RC20BF154J	R21927	. . RESISTOR, fixed	1	
–14	RC20BF474J	R21923	. . RESISTOR, fixed	1	
–15	RC20BF224J	R21924	. . RESISTOR, fixed	1	
–16	RC20BF224J	R21925	. . RESISTOR, fixed	1	
–17	RC20BF684J	R21926	. . RESISTOR, fixed	1	
–18	53410–995	XI21901	. . LIGHT, indicator (Dialco)	1	
–19	Coml	I21901	. . LAMP, glow: Mazda NE51, 110 v, 1/25 w	1	
–20	53410–995	XI21902	. . LIGHT, indicator (Dialco)	1	
	Coml	I21902	. . LAMP, glow: Mazda NE51, 110 v, 1/25 w (Ref item 19)	1	
–21	53410–995	XI21903	. . LIGHT, indicator (Dialco)	1	
	Coml	I21903	. . LAMP, glow: Mazda NE51, 110 v, 1/25 w (Ref item 19)	1	
–22	53410–995	XI21904	. . LIGHT, indicator (Dialco)	1	
	Coml	I21904	. . LAMP, glow: Mazda NE51, 110 v, 1/25 w (Ref item 19)	1	
–23	53410–995	XI21905	. . LIGHT, indicator (Dialco)	1	
	Coml	I21905	. . LAMP, glow: Mazda NE51, 110 v, 1/25 w (Ref item 19)	1	
–24	91410–931	XI21906	. . LIGHT, indicator (Dialco)	1	
	Coml	I21906	. . LAMP, glow: Mazda NE51, 110 v, 1/25 w (Ref item 19)	1	
–25	HCM–R	XF21901	. . HOLDER, fuse (Buss)	1	
–26	MCB–1/16	F21901	. . FUSE, cartridge (Buss)	1	
–27	K7126649P1	—	. . DISK, indicator	1	
–28	HCM–R	XF21902	. . HOLDER, fuse (Buss)	1	
	HGS–1/4	F21902	. . FUSE, cartridge (Ref item 26) (Buss)	1	
–29	K7126649P2	—	. . DISK, indicator	1	
–30	HCM–R	XF21903	. . HOLDER, fuse (Buss)	1	

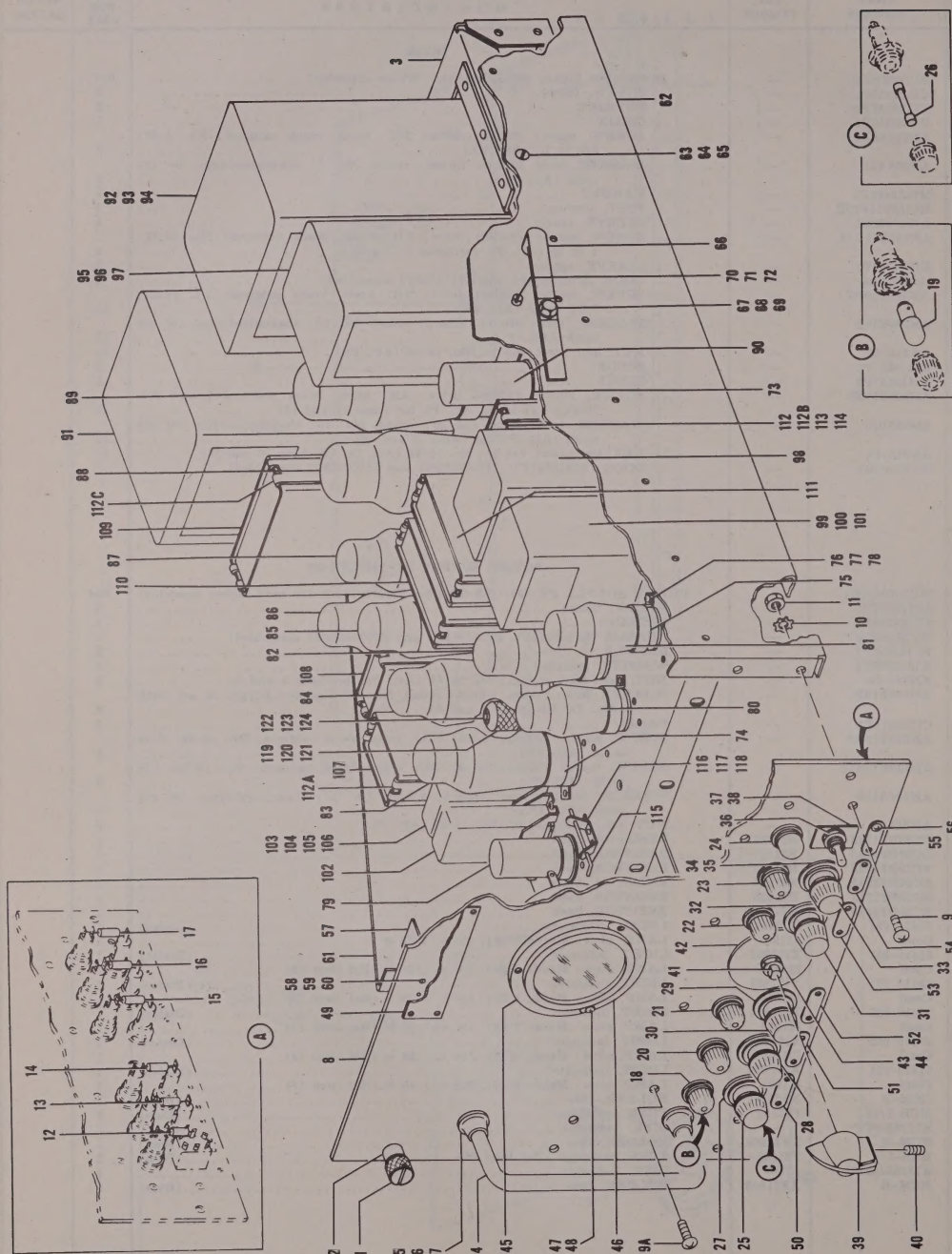

Figure 105. Power Supply PP–759/CPS–6B, Front View (Sheet 1 of 2 sheets, Index Nos. 1 thru 124)

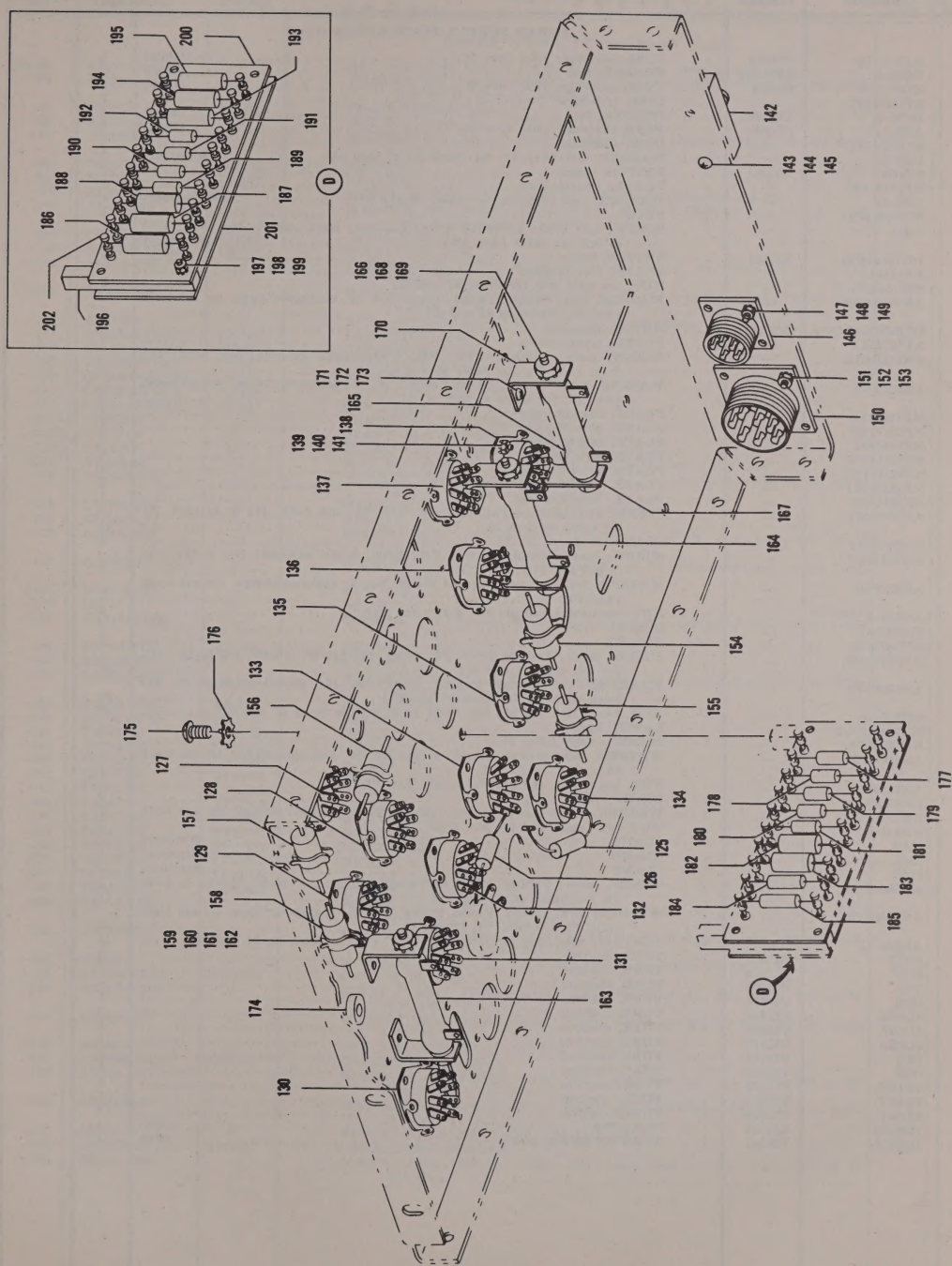

Figure 105. Power Supply PP–759/CPS–6B, Bottom–Front View (Sheet 2 of 2 sheets, Index Nos. 125 thru 202)

FIG. & INDEX NO.	PART NUMBER	REF SYMBOL	NOMENCLATURE 1 2 3 4 5 6 7	UNITS PER ASSY	APPLI-CATION
			POWER SUPPLY PP–759/CPS–6B (Cont)		
105–	MCB–1/16	F21903	. . FUSE, cartridge (Ref item 26) .....(Buss)	1	
–31	HCM–R	XF21904	. . HOLDER, fuse .....(Buss)	1	
	MCB–1/16	F21904	. . FUSE, cartridge (Ref item 26) .....(Buss)	1	
–32	K7126649P1	—	. . DISK, indicator	2	
–33	HCM–R	XF21905	. . HOLDER, fuse .....(Buss)	1	
	AGS–1/2	F21905	. . FUSE, cartridge (Ref item 26) .....(Buss)	1	
–34	K7126649P7	—	. . DISK, indicator	1	
–35	1228–02	—	. . WASHER, lock (Att. Pt. for items 25, 27 thru 34).....(Shakeproof)	5	
–36	ST52N	S21902	. . SWITCH, toggle	1	
–37	NP125976A	—	. . PLATE, identification	1	
–38	1922–01	—	. . WASHER, lock (Att. Pt. for items 36 and 37).....(Shakeproof)	1	
–39	K7886574P2	—	. . KNOB	1	
–40	Coml	—	. . SCREW, set: bristo six-spline drive; headless; steel, cad pl; No. 8–32; 3/16 in lg; cup point (Att. Pt.) .....(Bristolco)	2	
–41	P7770998P10	S21901	. . SWITCH, rotary	1	
–42	NP151475	—	. . PLATE, identification	1	
–43	K7870535P2	—	. . NUT, hex (Att. Pt. for items 41 and 42)	1	
–44	AN936A616B	—	. . WASHER, lock: bronze, tinned; round, 3/8 in; shakeproof-type, tw int teeth (Att. Pt. for items 41 and 42)	1	
–45	MR36W500DCVV	M21901	. . METER, ammeter	1	
–46	NP137452A	—	. . PLATE, identification	1	
–47	AN515B6R10	—	. . SCREW, mach: Phillips drive; RH; brass, black oxidized; No. 6–32; 5/8 in lg (Att. Pt. for items 45 and 46).....	3	
–48	AN936A6B	—	. . WASHER, lock: bronze, tinned; round, No. 6; shakeproof-type, tw int teeth (Att. Pt. for items 45 and 46)	3	
–49	NP156639A	—	. . PLATE, identification	1	
–50	NP151473H	—	. . PLATE, identification	1	
–51	NP151473J	—	. . PLATE, identification	1	
–52	NP1511473K	—	. . PLATE, identification	1	
–53	NP1511473L	—	. . PLATE, identification	1	
–54	NP125113F1	—	. . PLATE, identification	1	
–55	NP151473M	—	. . PLATE, identification	1	
–56	AN504C4R4	—	. . SCREW, se f-tapping: Phillips drive; RH; SS; No. 4–40; 1/4 in lg (Att. Pt. for items 49 thru 55)	16	
–57	A7019718P1	—	. . BRACKET	1	
–58	AN505B6R7	—	. . SCREW, mach: Phillips drive; FH; brass, black oxidized; No. 6–32; 7/16 in lg (Att. Pt.)	2	
–59	AN936B6B	—	. . WASHER, lock: bronze; tinned; round, No. 6; shakeproof-type, tw ext teeth (Att. Pt.)	2	
–60	AN340–6	—	. . NUT, hex: steel, cad pl; No. 6–32 (Att. Pt.)	2	
–61	C7704078P1	—	. . GUSSET	1	
–62	C7704078P2	—	. . GUSSET	1	
–63	AN505–10R8	—	. . SCREW, mach: Phillips drive; FH; steel, cad pl; No. 10–32; 1/2 in lg (Att. Pt. for items 61 and 62)	20	
–64	AN936B10B	—	. . WASHER, lock: bronze, tinned; round, No. 10; shakeproof-type; tw ext teeth (Att. Pt. for items 61 and 62)	20	
–65	AN345–10	—	. . NUT, hex: steel, cad pl; No. 10–32 (Att. Pt. for items 61 and 62).....	20	
–66	ML7005399G2	—	. . LATCH, lever	1	
–67	K7003070P1	—	. . SCREW, mach (Att. Pt.)	1	
–68	AN936B10B	—	. . WASHER, lock: bronze, tinned; round, No. 10; shakeproof-type, tw ext teeth (Att. Pt.)	1	
–69	AN345–10	—	. . NUT, hex: steel, cad pl; No. 10–32 (Att. Pt.)	1	
–70	K7003069P1	—	. . SCREW, mach	2	
–71	AN936B6B	—	. . WASHER, lock: bronze, tinned; round, No. 6; shakeproof-type, tw ext teeth	2	
–72	AN340–6	—	. . NUT, hex: steel, cad pl; No. 6–32	2	
–73	926B	—	. . CLAMP .....(Birtcher)	1	
–74	926A	—	. . CLAMP .....(Birtcher)	5	
–75	926C	—	. . CLAMP .....(Birtcher)	5	
–76	AN520–10R6	—	. . SCREW, mach: Phillips drive; RH; steel, cad pl; No. 10–32; 3/8 in lg (Att. Pt. for items 73, 74 and 75)	11	
–77	AN936B10B	—	. . WASHER, lock: bronze, tinned; round, No. 10; shakeproof-type, tw ext teeth (Att. Pt. for items 73, 74 and 75)	11	
–78	AN345–10	—	. . NUT, hex: steel, cad pl; No. 10–32 (Att. Pt. for items 73, 74 and 75).....	11	
–79	6SH7	V21907	. . TUBE, electron	1	
–80	OC3	V21906	. . TUBE, electron	1	
–81	OC3	V21905	. . TUBE, electron	1	
–82	OD3	V21904	. . TUBE, electron	1	
–83	6L6GA	V21908	. . TUBE, electron	1	
–84	6L6GA	V21909	. . TUBE, electron	1	
–85	6L6GA	V21910	. . TUBE, electron	1	
–86	OD3	V21911	. . TUBE, electron	1	
–87	OD3	V21912	. . TUBE, electron	1	
–88	5R4GY	V21902	. . TUBE, electron	1	
–89	5R4GY	V21901	. . TUBE, electron	1	
–90	6X5GT	V21903	. . TUBE, electron	1	
–91	7480478	L21901	. . REACTOR .....(GE)	1	
–92	7480475	T21901	. . TRANSFORMER, power .....(GE)	1	

FIG. & INDEX NO.	PART NUMBER	REF SYMBOL	1 2 3 4 5 6 7 NOMENCLATURE	UNITS PER ASSY	APPLI-CATION
			POWER SUPPLY PP–759/CPS–6B (Cont)		
105–93	AN340–416	—	. . NUT, hex: steel, cad pl; 1/4 in–20 (Att. Pt. for items 91 and 92)	8	
–94	AN936B416B	—	. . WASHER, lock: bronze, tinned; round, 1/4 in; shakeproof-type, tw ext teeth (Att. Pt. for items 91 and 92)	8	
–95	7403316	T21902	. . TRANSFORMER, power (GE)	1	
–96	AN340–8	—	. . NUT, hex: steel, cad pl; No. 8–32 (Att. Pt.)	4	
–97	AN936B8B	—	. . WASHER, lock: bronze, tinned; round, No. 8; shakeproof-type, tw ext teeth (Att. Pt.)	4	
–98	7481554	L21902	. . REACTOR (GE)	1	
–99	7481554	L21903	. . REACTOR (GE)	1	
–100	AN340–6	—	. . NUT, hex: steel, cad pl; No. 6–32 (Att. Pt. for items 98 and 99)	8	
–101	AN936B6B	—	. . WASHER, lock: bronze, tinned; round, No. 6; shakeproof-type, tw ext teeth (Att. Pt. for items 98 and 99)	8	
–102	CP65B1FF105K	C21905	. . CAPACITOR, fixed	1	
–103	CP65B1FF105K	C21907	. . CAPACITOR, fixed	1	
–104	AN515–6R6	—	. . SCREW, mach: Phillips drive; RH; steel, cad pl; No. 6–32; 3/8 in lg (Att. Pt. for items 102 and 103)	4	
–105	AN936B6B	—	. . WASHER, lock: bronze, tinned; round, No. 6; shakeproof-type, tw ext teeth (Att. Pt. for items 102 and 103)	4	
–106	AN340–6	—	. . NUT, hex: steel, cad pl; No. 6–32 (Att. Pt. for items 102 and 103)	4	
–107	CP70B1FF605K	C21904	. . CAPACITOR, fixed	1	
–108	CP70B1FF205K	C21906	. . CAPACITOR, fixed	1	
–109	CP70B1FF106K	C21901	. . CAPACITOR, fixed	1	
–110	CP70B1FF106K	C21910	. . CAPACITOR, fixed	1	
–111	CP70B1FF106K	C21909	. . CAPACITOR, fixed	1	
–112	CP70B1FF205K	C21908	. . CAPACITOR, fixed	1	
–112A	CP07SB6	—	. . CLAMP (Att. Pt. for item 107)	2	
–112B	CP07SA3	—	. . CLAMP (Att. Pt. for items 108 and 112)	4	
–112C	CP07SC4	—	. . CLAMP (Att. Pt. for items 109, 110 and 111)	6	
–113	AN345–10	—	. . NUT, hex: steel, cad pl; No. 10–32 (Att. Pt. for items 107 thru 112)	12	
–114	AN936B10B	—	. . WASHER, lock: bronze, tinned; round, No. 10; shakeproof-type, tw ext teeth (Att. Pt. for items 107 thru 112)	12	
–115	K7876451P1	—	. . WRENCH	1	
–116	K7126174P1	—	. . HOLDER, wrench	1	
–117	AN515–4R6	—	. . SCREW, mach: Phillips drive; RH; steel, cad pl; No. 4–40; 3/8 in lg (Att. Pt.)	2	
–118	AN936B4B	—	. . WASHER, lock: bronze, tinned; round, No. 4; shakeproof-type, tw ext teeth (Att. Pt.)	2	
–119	M7481469P1	—	. . NUT, lock	1	
–120	10061	—	. . COLLET (Millen)	1	
–121	AN936A616B	—	. . WASHER, lock: bronze, tinned; round, 3/8 in; shakeproof-type, tw int teeth (Att. Pt.)	1	
–122	P7770835P20	R21916	. . RESISTOR, variable	1	
–123	K7870535P2	—	. . NUT, hex (Att. Pt.)	1	
–124	AN936A616B	—	. . WASHER, lock: bronze, tinned; round, 3/8 in; shakeproof-type, tw int teeth (Att. Pt.)	1	
–125	RC42BF154J	R21904	. . RESISTOR, fixed	1	
–126	RC20BF104J	R21915	. . RESISTOR, fixed	1	
–127	TSB8T101	XV21905	. . SOCKET, tube	1	
–128	TSB8T101	XV21904	. . SOCKET, tube	1	
–129	TSB8T101	XV21906	. . SOCKET, tube	1	
–130	TSB8T101	XV21907	. . SOCKET, tube	1	
–131	TSB8T101	XV21908	. . SOCKET, tube	1	
–132	TSB8T101	XV21909	. . SOCKET, tube	1	
–133	TSB8T101	XV21910	. . SOCKET, tube	1	
–134	TSB8T101	XV21911	. . SOCKET, tube	1	
–135	TSB8T101	XV21912	. . SOCKET, tube	1	
–136	TSB8T101	XV21902	. . SOCKET, tube	1	
–137	TSB8T101	XV21903	. . SOCKET, tube	1	
–138	TSB8T101	XV21901	. . SOCKET, tube	1	
–139	AN515–6R6	—	. . SCREW, mach: Phillips drive; RH; steel, cad pl; No. 6–32; 3/8 in lg (Att. Pt. for items 127 thru 138)	24	
–140	AN936B6B	—	. . WASHER, lock: bronze, tinned; round, No. 6; shakeproof-type, tw ext teeth (Att. Pt. for items 127 thru 138)	24	
–141	AN340–6	—	. . NUT, hex: steel, cad pl; No. 6–32 (Att. Pt. for items 127 thru 138)	24	
–142	ML7460330G5	S21004B	. . SWITCH, interlock	1	
–143	AN515–6R12	—	. . SCREW, mach: Phillips drive; RH; steel, cad pl; No. 6–32; 3/4 in lg (Att. Pt.)	2	
–144	AN936A6B	—	. . WASHER, lock: bronze, tinned; round, No. 6; shakeproof-type, tw int teeth (Att. Pt.)	2	
–145	AN340–6	—	. . NUT, hex: steel, cad pl; No. 6–32 (Att. Pt.)	2	
–146	AN3102–14S5P	J21902	. . CONNECTOR, receptacle	1	
–147	AN515–4R6	—	. . SCREW, mach: Phillips drive; RH; steel, cad pl; No. 4–40; 3/8 in lg (Att. Pt.)	4	
–148	AN936B4B	—	. . WASHER, lock: bronze, tinned; round, No. 4; shakeproof-type, tw ext teeth (Att. Pt.)	4	
–149	AN340–4	—	. . NUT, hex: steel, cad pl; No. 4–40 (Att. Pt.)	4	
–150	AN3102–22–18S	J21901	. . CONNECTOR, receptacle	1	
–151	AN515–4R8	—	. . SCREW, mach: Phillips drive; RH; steel, cad pl; No. 4–40; 1/2 in lg (Att. Pt.)	4	

FIG. & INDEX NO.	PART NUMBER	REF SYMBOL	NOMENCLATURE 1 2 3 4 5 6 7	UNITS PER ASSY	APPLI-CATION
			POWER SUPPLY PP–759/CPS–6B (Cont)		
105–152	AN936B4B	—	. . WASHER, lock: bronze, tinned; round, No. 4; shakeproof-type, tw ext teeth (Att. Pt.)	4	
–153	AN340–4	—	. . NUT, hex: steel, cad pl; No. 4–40 (Att. Pt.)	4	
–154	CP26A1EF103V	C21903	. . CAPACITOR, fixed	1	
–155	CP26A1EF103V	C21902	. . CAPACITOR, fixed	1	
–156	CP26A1EF103V	C21911	. . CAPACITOR, fixed	1	
–157	CP26A1EF103V	C21912	. . CAPACITOR, fixed	1	
–158	CP26A1EF103V	C21913	. . CAPACITOR, fixed	1	
–159	TH–15	—	. . CLIP (Mallory)	5	
–160	AN515–4R6	—	. . SCREW, mach: Phillips drive; RH; steel, cad pl; No. 4–40; 3/8 in lg (Att. Pt.)	5	
–161	AN936B4B	—	. . WASHER, lock: bronze, tinned; round, No. 4; shakeproof-type, tw ext teeth (Att. Pt.)	5	
–162	AN340–4	—	. . NUT, hex: steel, cad pl; No. 4–40 (Att. Pt.)	5	
–163	RW33G632	R21918	. . RESISTOR, fixed	1	
–164	RW33GR31	R21928	. . RESISTOR, fixed	1	
–165	RW33G102	R21929	. . RESISTOR, fixed	1	
–166	K7133855P113	—	. . STUD (Att. Pt. for items 163, 164 and 165)	3	
–167	A7874555P6	—	. . WASHER, flat (Att. Pt. for items 163, 164 and 165)	6	
–168	AN936B10B	—	. . WASHER, lock: bronze, tinned; round, No. 10; shakeproof-type, tw ext teeth (Att. Pt. for items 163, 164 and 165)	6	
–169	AN345–10	—	. . NUT, hex: steel, cad pl; No. 10–32 (Att. Pt. for items 163, 164 and 165)	6	
–170	A7013299P1	—	. . BRACKET	6	
–171	AN515–6R6	—	. . SCREW, mach: Phillips drive; RH; steel, cad pl; No. 6–32; 3/8 in lg (Att. Pt.)	6	
–172	AN936B6B	—	. . WASHER, lock: bronze, tinned; round, No. 6; shakeproof-type, tw ext teeth (Att. Pt.)	6	
–173	AN340–6	—	. . NUT, hex: steel, cad pl; No. 6–32 (Att. Pt.)	6	
–174	M2R53P3	—	. . GROMMET	1	
	ML7407480G1	—	. . RESISTOR ASSEMBLY	1	
–175	AN515–8R7	—	. . SCREW, mach: Phillips drive; RH; steel, cad pl; No. 8–32; 7/16 in lg (Att. Pt.)	2	
–176	AN936B8B	—	. . WASHER, lock: bronze, tinned; round, No. 8; shakeproof-type, tw ext teeth (Att. Pt.)	2	
–177	RC20BF104J	R21917	. . . RESISTOR, fixed	1	
–178	RC20BF104J	R21930	. . . RESISTOR, fixed	1	
–179	RC20BF331J	R21914	. . . RESISTOR, fixed	1	
–180	RC20BF331J	R21913	. . . RESISTOR, fixed	1	
–181	RC20BF331J	R21912	. . . RESISTOR, fixed	1	
–182	RC42BF332J	R21920	. . . RESISTOR, fixed	1	
–183	RC42BF332J	R21919	. . . RESISTOR, fixed	1	
–184	RC30BF333J	R21921	. . . RESISTOR, fixed	1	
–185	RC30BF333J	R21922	. . . RESISTOR, fixed	1	
–186	RC30BF470J	R21908	. . . RESISTOR, fixed	1	
–187	RC30BF470J	R21907	. . . RESISTOR, fixed	1	
–188	RC30BF470J	R21906	. . . RESISTOR, fixed	1	
–189	RC20BF224J	R21905	. . . RESISTOR, fixed	1	
–190	RC20BF470J	R21911	. . . RESISTOR, fixed	1	
–191	RC20BF470J	R21910	. . . RESISTOR, fixed	1	
–192	RC20BF470J	R21909	. . . RESISTOR, fixed	1	
–193	RC42BF682J	R21903	. . . RESISTOR, fixed	1	
–194	RC42BF682J	R21902	. . . RESISTOR, fixed	1	
–195	RC42BF682J	R21901	. . . RESISTOR, fixed	1	
–196	K7126106P13	—	. . . POST, spacing	2	
–197	AN515–8R12	—	. . . SCREW, mach: Phillips drive; RH; steel, cad pl; No. 8–32; 3/4 in lg (Att. Pt.)	4	
–198	AN936B8B	—	. . . WASHER, lock: bronze, tinned; round, No. 8; shakeproof-type, tw ext teeth (Att. Pt.)	4	
–199	AN340–8	—	. . . NUT, hex: steel, cad pl; No. 8–32 (Att. Pt.)	4	
–200	No Number	—	. . . PANEL (A7009790P1 and B7407479P2 assembled)	1	
–201	No Number	—	. . . PANEL (A7009790P1 and B7407479P1 assembled)	1	
–202	T100–3	—	. . . TERMINAL, stud (Bead Chain)	40	
			RECEIVER CONTROL C–1001/CPS–6B		
106–	ML7300884G1	—	. RECEIVER CONTROL C–1001/CPS–6B (See Figure 101–6 for next higher assembly)	Ref	
–1	K7126123P2	—	. . SCREW, captive	6	
	ML7704233G1	—	. . CHASSIS	1	
–2	K7128235P2	—	. . . BUSHING	6	
–3	C7704233P2	—	. . . CHASSIS	1	
–4	K7002870P1	—	. . HANDLE	2	
–5	K7002869P1	—	. . WASHER, extruded	4	
–6	AN345–10	—	. . NUT, hex: steel, cad pl; No. 10–32 (Att. Pt. for items 4 and 5)	4	

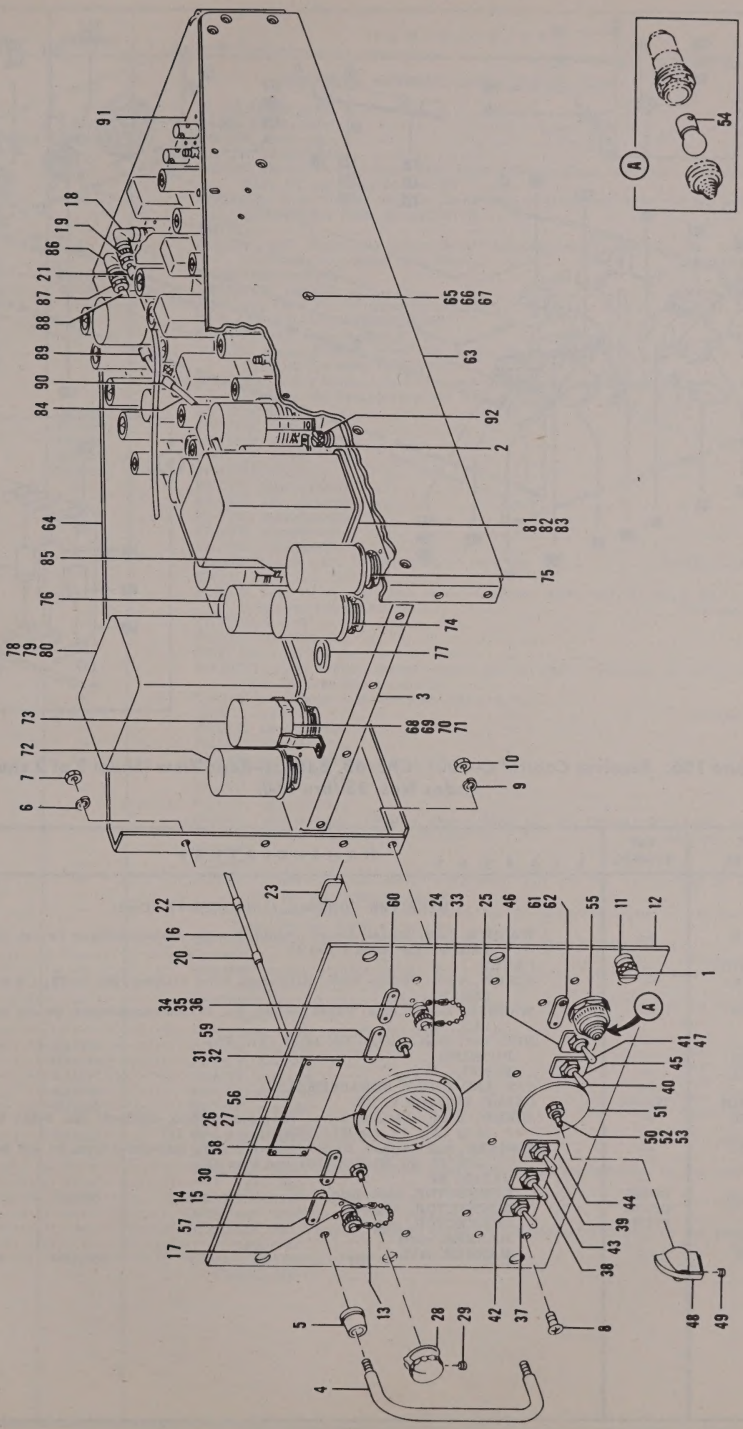

Figure 106. Receiver Control C–1001/CPS–6B, Front View (Sheet 1 of 2 sheets, Index Nos. 1 thru 92)

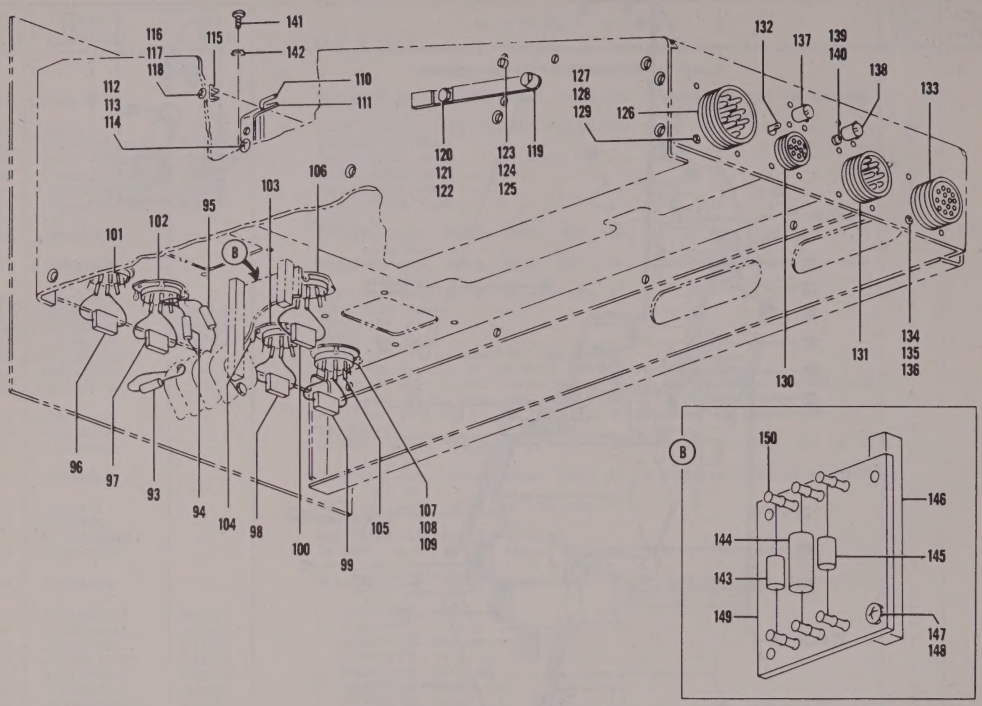

Figure 106. Receiver Control C–1001/CPS–6B, Bottom–Rear View (Sheet 2 of 2 sheets, Index Nos. 93 thru 150)

FIG. & INDEX NO.	PART NUMBER	REF SYMBOL	1 2 3 4 5 6 7 NOMENCLATURE	UNITS PER ASSY	APPLI-CATION
			RECEIVER CONTROL C–1001/CPS–6B (Cont)		
106–7	AN936B10B	—	. . WASHER, lock: bronze, tinned; round, No. 10; shakeproof-type tw ext teeth (Att. Pt. for items 4 and 5)	4	
	ML7407474G1	—	. . PANEL	1	
–8	AN520B10R8	—	. . SCREW, mach: Phillips drive; RH; brass, black oxidized; No. 10–32; 1/2 in lg (Att. Pt.)	8	
–9	AN936B10B	—	. . WASHER, lock: bronze, tinned; round, No. 10; shakeproof-type, tw ext teeth (Att. Pt.)	8	
–10	AN345–10	—	. . NUT, hex: steel, cad pl; No. 10–32 (Att. Pt.)	8	
–11	K7128235P2	—	. . . BUSHING	6	
–12	B7407474P2	—	. . . PANEL	1	
–13	CW123/U	—	. . CAP AND CHAIN SUBASSEMBLY	1	
	ML7012787G1	W21601	. . CABLE ASSEMBLY, RF	1	
–14	AN520B3R5	—	. . SCREW, mach: Phillips drive; RH; brass, black oxidized; No. 3–56; 5/16 in lg (Att. Pt. for ML7012787G1 and item 13)	4	
–15	AN936B3B	—	. . WASHER, lock: bronze, tinned; round, No. 3; shakeproof-type, tw ext teeth (Att. Pt. for ML7012787G1 and item 13)	4	
–16	RG59/U	—	. . . CABLE, RF	1	
–17	UG262/U	J21606	. . . CONNECTOR, receptacle	1	
–18	UG306/U	E21706	. . . CONNECTOR, adapter	1	
–19	UG260/U	P21706	. . . CONNECTOR, plug	1	
–20	NP154596U	—	. . . MARKER, cable	1	
–21	NP154596T	—	. . . MARKER, cable	1	

FIG. & INDEX NO.	PART NUMBER	REF SYMBOL	1 2 3 4 5 6 7 NOMENCLATURE	UNITS PER ASSY	APPLI-CATION
			RECEIVER CONTROL C–1001/CPS–6B (Cont)		
106–22	NP151716A	—	. . . MARKER, cable	1	
–23	CM20D471J	C21606	. . CAPACITOR, fixed	1	
–24	MR36W001DCMA	M21601	. . METER, ammeter	1	
–25	NP151479B	—	. . PLATE, identification	1	
–26	AN515B6R7	—	. . SCREW, mach: Phillips drive; RH; brass, black oxidized; No. 6–32; 7/16 in lg (Att. Pt. for items 24 and 25)	3	
–27	AN936A6B	—	. . WASHER, lock: bronze, tinned; round, No. 6; shakeproof-type, tw int teeth (Att. Pt. for items 24 and 25)	3	
–28	K7106459P1	—	. . KNOB	2	
–29	Coml	—	. . SCREW, set: Bristo six-spline drive; headless; steel, cad pl; No. 8–32; 1/4 in lg; cup point (Att. Pt.) (Bristolco)	4	
–30	P7770835P27	R21605	. . RESISTOR, variable	1	
–31	P7770835P20	R21607	. . RESISTOR, variable	1	
–32	K7870535P2	—	. . NUT, hex (Att. Pt. for items 30 and 31)	2	
–33	CW123/U	—	. . CAP AND CHAIN SUBASSEMBLY	1	
–34	UG414/U	—	. . CONNECTOR, receptacle	1	
–35	AN520B3R5	—	. . SCREW, mach: Phillips drive; RH; brass, black oxidized; No. 3–56; 5/16 in lg (Att. Pt. for items 33 and 34)	4	
–36	AN936B3B	—	. . WASHER, lock: bronze, tinned; round, No. 3; shakeproof-type, tw ext teeth (Att. Pt. for items 33 and 34)	4	
–37	ST52N	S21604	. . SWITCH, toggle	1	
–38	ST52N	S21603	. . SWITCH, toggle	1	
–39	ST52N	S21602	. . SWITCH, toggle	1	
–40	ST52N	S21606	. . SWITCH, toggle	1	
–41	ST52N	S21601	. . SWITCH, toggle	1	
–42	NP151484B	—	. . PLATE, identification	1	
–43	NP125976E	—	. . PLATE, identification	1	
–44	NP125976D	—	. . PLATE, identification	1	
–45	NP151484A	—	. . PLATE, identification	1	
–46	NP125976B	—	. . PLATE, identification	1	
–47	1922–01	—	. . WASHER, lock (Att. Pt. for items 37 thru 46) (Shakeproof)	5	
–48	K7886574P2	—	. . KNOB	1	
–49	Coml	—	. . SCREW, set: Bristo six-spline drive; headless; steel, cad pl; No. 8–32; 1/4 in lg; cup point (Att. Pt.) (Bristolco)	2	
–50	P7770998P3	—	. . SWITCH, rotary	1	
–51	NP151483	—	. . PLATE, identification	1	
–52	K7870535P2	—	. . NUT, hex (Att. Pt. for items 50 and 51)	1	
–53	AN936A616B	—	. . WASHER, lock: bronze, tinned; round, 3/8 in; shakeproof-type, tw int teeth (Att. Pt. for items 50 and 51)	1	
–54	Coml	—	. . LAMP, incandescent: Mazda 6S6, 115 v, 6 w	1	
–55	801002–511	XI21601	. . LIGHT, indicator (Dialco)	1	
–56	NP156721B	—	. . PLATE, identification	1	
–57	NP125992G	—	. . PLATE, identification	1	
–58	NP151473N	—	. . PLATE, identification	1	
–59	NP125992K	—	. . PLATE, identification	1	
–60	NP125992F	—	. . PLATE, identification	1	
–61	NP125992C	—	. . PLATE, identification	1	
–62	Coml	—	. . SCREW, self-tapping: Phillips drive; Bind H; SS, tinned; No. 4–40; 1/4 in lg (Att. Pt. for items 56 thru 61) (Shakeproof)	14	
–63	C7704224P1	—	. . GUSSET	1	
–64	C7704224P2	—	. . GUSSET	1	
–65	AN510–10R8	—	. . SCREW, mach: Phillips drive; FH; steel, cad pl; No. 10–32; 1/2 in lg (Att. Pt. for items 63 and 64)	14	
–66	AN936B10B	—	. . WASHER, lock: bronze, tinned; round, No. 10; shakeproof-type, tw ext teeth (Att. Pt. for items 63 and 64)	14	
–67	AN345–10	—	. . NUT, hex: steel, cad pl; No. 10–32 (Att. Pt. for items 63 and 64)	14	
–68	926D	—	. . CLAMP (Birtcher)	5	
–69	AN515–8R7	—	. . SCREW, mach: Phillips drive; RH; steel, cad pl; No. 8–32; 7/16 in lg (Att. Pt.)	5	
–70	AN936B8B	—	. . WASHER, lock: bronze, tinned; round, No. 8; shakeproof-type, tw ext teeth (Att. Pt.)	5	
–71	AN340–8	—	. . NUT, hex: steel, cad pl; No. 8–32 (Att. Pt.)	5	
–72	SK5123	K21604	. . RELAY, solenoid (Clare CP)	1	
–73	SK5123	K21603	. . RELAY, solenoid (Clare CP)	1	
–74	SK5123	K21601	. . RELAY, solenoid (Clare CP)	1	
–75	SK5123	K21602	. . RELAY, solenoid (Clare CP)	1	
–76	SK5123	K21605	. . RELAY, solenoid (Clare CP)	1	
–77	M2R53P23	—	. . GROMMET	1	
–78	7480465	T21601	. . TRANSFORMER, power (GE)	1	
–79	AN340–8	—	. . NUT, hex: steel, cad pl; No. 8–32 (Att. Pt.)	4	
–80	AN936B8B	—	. . WASHER, lock: bronze, tinned; round, No. 8; shakeproof-type, tw ext teeth (Att. Pt.)	4	
–81	7403311	T21602	. . TRANSFORMER, power (GE)	1	
–82	AN340–6	—	. . NUT, hex: steel, cad pl; No. 6–32 (Att. Pt.)	4	
–83	AN936B6B	—	. . WASHER, lock: bronze, tinned; round, No. 6; shakeproof-type, tw ext teeth (Att. Pt.)	4	
	ML7012788G1	W21602	. . CABLE ASSEMBLY, RF	1	
–84	RG59/U	—	. . . CABLE, RF	1	

FIG. & INDEX NO.	PART NUMBER	REF SYMBOL	NOMENCLATURE 1 2 3 4 5 6 7	UNITS PER ASSY	APPLI-CATION
			RECEIVER CONTROL C-1001/CPS-6B (Cont)		
106-85	D-102-B	—	. . . HANGER, cable (Industrial Prod Co)	1	
-86	UG306/U	E21705	. . . CONNECTOR, adapter	1	
-87	UG260/U	P21705	. . . CONNECTOR, plug	1	
-88	NP154596V	—	. . . MARKER, cable	1	
-89	NP151716L	—	. . . MARKER, cable	1	
-90	NP151716B	—	. . . MARKER, cable	1	
-91	ML7301368G1	—	. . IF AMPLIFIER AM-622/CPS-6B (See Figure 107 for breakdown)	1	
-92	K7126123P1	—	. . SCREW, captive (Att. Pt.)	6	
-93	RC20BF330J	R21602	. . RESISTOR, fixed	1	
-94	RC20BF330J	R21601	. . RESISTOR, fixed	1	
-95	RC20BF330J	R21603	. . RESISTOR, fixed	1	
-96	CM20D471J	C21602	. . CAPACITOR, fixed	1	
-97	CM20D471J	C21601	. . CAPACITOR, fixed	1	
-98	CM20D471J	C21603	. . CAPACITOR, fixed	1	
-99	CM20D471J	C21604	. . CAPACITOR, fixed	1	
-100	CM20D471J	C21605	. . CAPACITOR, fixed	1	
-102	TSB8T101	XK21601	. . SOCKET, tube	1	
-103	TSB8T101	XK21603	. . SOCKET, tube	1	
-101	TSB8T101	XK21602	. . SOCKET, tube	1	
-104	A7135118P2	—	. . TERMINAL, lug	2	
-105	TSB8T101	XK21604	. . SOCKET, tube	1	
-106	TSB8T101	XK21605	. . SOCKET, tube	1	
-107	AN515-6R7	—	. . SCREW, mach: Phillips drive; RH; steel, cad pl; No. 6-32; 7/16 in lg (Att. Pt. for items 101 thru 106)	10	
-108	AN936B6B	—	. . WASHER, lock: bronze, tinned; round, No. 6; shakeproof-type, tw ext teeth (Att. Pt. for items 101 thru 106)	10	
-109	AN340-6	—	. . NUT, hex: steel, cad pl; No. 6-32 (Att. Pt. for items 101 thru 106)	10	
-110	K7876451P1	—	. . WRENCH	1	
-111	K7126174P1	—	. . HOLDER, wrench	1	
-112	AN515-4R5	—	. . SCREW, mach: Phillips drive; RH; steel, cad pl; No. 4-40; 5/16 in lg (Att. Pt.)	2	
-113	AN936B4B	—	. . WASHER, lock: bronze, tinned, round, No. 4; shakeproof-type, tw ext teeth (Att. Pt.)	2	
-114	AN340-4	—	. . NUT, hex: steel, cad pl; No. 4-40 (Att. Pt.)	2	
-115	101002	—	. . CLIP (Littelfuse)	2	
-116	AN515-4R5	—	. . SCREW, mach: Phillips drive; RH; steel, cad pl; No. 4-40; 5/16 in lg (Att. Pt.)	2	
-117	AN936B4B	—	. . WASHER, lock: bronze, tinned, round, No. 4; shakeproof-type, tw ext teeth (Att. Pt.)	2	
-118	AN340-4	—	. . NUT, hex: steel, cad pl; No. 4-40 (Att. Pt.)	2	
-119	ML7005399G2	—	. . LATCH, lever	1	
-120	K7003070P1	—	. . SCREW, mach (Att. Pt.)	1	
-121	AN936B10B	—	. . WASHER, lock: bronze, tinned; round, No. 10; shakeproof-type, tw ext teeth (Att. Pt.)	1	
-122	AN345-10	—	. . NUT, hex: steel, cad pl; No. 10-32 (Att. Pt.)	1	
-123	K7003069P1	—	. . SCREW, mach	2	
-124	AN936B6B	—	. . WASHER, lock: bronze, tinned; round, No. 6; shakeproof-type, tw ext teeth (Att. Pt.)	2	
-125	AN340-6	—	. . NUT, hex: steel, cad pl; No. 6-32	2	
-126	AN3102-28-2P	J21602	. . CONNECTOR, receptacle	1	
-127	AN515-6R7	—	. . SCREW, mach: Phillips drive; RH; steel, cad pl; No. 6-32; 7/16 in lg (Att. Pt.)	4	
-128	AN936B6B	—	. . WASHER, lock: bronze, tinned; round, No. 6; shakeproof-type, tw ext teeth (Att. Pt.)	4	
-129	AN340-6	—	. . NUT, hex: steel, cad pl; No. 6-32 (Att. Pt.)	4	
-130	AN3102A-16S1S	J21603	. . CONNECTOR, receptacle	1	
-131	AN3102A-22-18P	J21601	. . CONNECTOR, receptacle	1	
-132	A7135118P2	—	. . TERMINAL, lug	2	
-133	AN3102-22-19S	J21613	. . CONNECTOR, receptacle	1	
-134	AN515-4R7	—	. . SCREW, mach: Phillips drive; RH; steel, cad pl; No. 4-40; 7/16 in lg (Att. Pt. for items 130 thru 133)	12	
-135	AN936B4B	—	. . WASHER, lock: bronze, tinned; round, No. 4; shakeproof-type, tw ext teeth (Att. Pt. for items 130 thru 133)	12	
-136	AN340-4	—	. . NUT, hex: steel, cad pl; No. 4-40 (Att. Pt. for items 130 thru 133)	12	
-137	UG290/U	J21612	. . CONNECTOR, receptacle	1	
-138	UG290/U	J21611	. . CONNECTOR, receptacle	1	
-139	AN520-3R5	—	. . SCREW, mach: Phillips drive; RH; steel, cad pl; No. 3-56; 5/16 in lg (Att. Pt. for items 137 and 138)	8	
-140	1903	—	. . WASHER, lock (Att. Pt. for items 137 and 138) (Shakeproof)	8	
	ML7010875G1	—	. . RESISTOR ASSEMBLY	1	
-141	AN515-8R6	—	. . SCREW, mach: Phillips drive; RH; steel, cad pl; No. 8-32; 3/8 in lg (Att. Pt.)	2	
-142	AN936B8B	—	. . WASHER, lock: bronze, tinned; round, No. 8; shakeproof-type, tw ext teeth (Att. Pt.)	2	
-143	RC20BF223J	R21604	. . . RESISTOR, fixed	1	
-144	RC42BF153J	R21606	. . . RESISTOR, fixed	1	
-145	RC20BF420J	R21608	. . . RESISTOR, fixed	1	

FIG. & INDEX NO.	PART NUMBER	REF SYMBOL	NOMENCLATURE 1 2 3 4 5 6 7	UNITS PER ASSY	APPLI-CATION
			RECEIVER CONTROL C–1001/CPS–6B (Cont)		
106–146	K7126106P1	—	. . . POST, supporting	2	
–147	AN515–8R7	—	. . . SCREW, mach: Phillips drive; RH; steel, cad pl; No. 8–32; 7/16 in lg (Att. Pt.)	4	
–148	AN936B8B	—	. . . WASHER, lock: bronze, tinned; round, No. 8; shakeproof-type, tw ext teeth (Att. Pt.)	4	
	ML7010876G1	—	. . . BOARD, terminal	1	
–149	A7010876P2	—	. . . . PANEL	1	
–150	T100–3	—	. . . . TERMINAL, stud (Bead Chain)	6	
			IF AMPLIFIER AM–622/CPS–6B		
107–	ML7301368G1	—	. . IF AMPLIFIER AM–622/CPS–6B (See Figure 106–91 for next higher assembly)	Ref	
–1	ML7407272G1	—	. . . COVER	1	
–2	A7009936P3	—	. . . SCREW, thumb (Att. Pt.)	10	
	ML7603317G1	—	. . . CHASSIS	1	
–3	No Number	—	. . . . CHASSIS (B7407140P1, D7603317P2, P4, P5 and P6, assembled)	1	
–4	T100–3	—	. . . . TERMINAL, stud (Bead Chain)	1	
–5	UG290/U	J21702	. . . CONNECTOR, receptacle	1	
–6	UG290/U	J21701	. . . CONNECTOR, receptacle	1	
–7	UG290/U	J21703	. . . CONNECTOR, receptacle	1	
–8	UG290/U	J21706	. . . CONNECTOR, receptacle	1	
–9	UG290/U	J21705	. . . CONNECTOR, receptacle	1	
–10	UG290/U	J21704	. . . CONNECTOR, receptacle	1	
–11	UG290/U	J21712	. . . CONNECTOR, receptacle	1	
–12	AN520–3R4	—	. . . SCREW, mach: Phillips drive; RH; steel, cad pl; No. 3–56; 1/4 in lg (Att. Pt. for items 5 thru 11)	28	
–13	Coml	—	. . . WASHER, lock: bronze, cad pl; round, No. 3, shakeproof-type, tw ext teeth (Att. Pt. for items 5 thru 11) (Shakeproof)	28	
–14	ML7014878G3	L21706	. . . COIL, RF	1	
–15	ML7014878G3	L21705	. . . COIL, RF	1	
–16	ML7014878G3	L21704	. . . COIL, RF	1	
–17	ML7014878G3	L21703	. . . COIL, RF	1	
–18	ML7014878G3	L21702	. . . COIL, RF	1	
–19	ML7014878G3	L21715	. . . COIL, RF	1	
–20	AN936B416B	—	. . . WASHER, lock: bronze, tinned; round, 1/4 in; shakeproof-type, tw ext teeth (Att. Pt. for items 14 thru 19)	6	
–21	A7135118P1	—	. . . TERMINAL, lug	13	
–22	1477	—	. . . TERMINAL, lug (Cinch)	13	
–23	AN515–6R4	—	. . . SCREW, mach: Phillips drive; RH; steel, cad pl; No. 6–32; 1/4 in lg (Att. Pt. for items 21 and 22)	13	
–24	AN936B6B	—	. . . WASHER, lock: bronze, tinned; round, No. 6; shakeproof-type, tw ext teeth (Att. Pt. for items 21 and 22)	13	
–25	1477	—	. . . TERMINAL, lug (Cinch)	1	
–26	AN515–6R4	—	. . . SCREW, mach: Phillips drive; RH; steel, cad pl; No. 6–32; 1/4 in lg (Att. Pt.)	1	
–27	AN936B6B	—	. . . WASHER, lock: bronze, tinned; round, No. 6; shakeproof-type, tw ext teeth (Att. Pt.)	1	
–28	M7462893P1	—	. . . INSULATOR, standoff	14	
–29	K7872445	—	. . . WASHER, flat	14	
–30	AN515–6R5	—	. . . SCREW, mach: Phillips drive; RH; steel, cad pl; No. 6–32; 5/16 in lg (Att. Pt. for items 28 and 29)	14	
–31	AN936B6B	—	. . . WASHER, lock: bronze, tinned; round, No. 6; shakeproof-type, tw ext teeth (Att. Pt. for items 28 and 29)	14	
–32	760	—	. . . TERMINAL, stud (Winchester Electronics)	48	
–33	AN515–4R4	—	. . . SCREW, mach: Phillips drive; RH; steel, cad pl; No. 4–40; 1/4 in lg (Att. Pt.)	48	
–34	AN936B4B	—	. . . WASHER, lock: bronze, tinned; round, No. 4; shakeproof-type, tw ext teeth (Att. Pt.)	48	
–35	TS103U02	—	. . . SHIELD, tube	9	
–36	12AU7	V21707	. . . TUBE, electron	1	
–37	12AT7	V21712	. . . TUBE, electron	1	
–38	5687	V21713	. . . TUBE, electron	1	
–39	12AU7	V21715	. . . TUBE, electron	1	
–40	12AU7	V21716	. . . TUBE, electron	1	
–41	12AT7	V21717	. . . TUBE, electron	1	
–42	12AT7	V21718	. . . TUBE, electron	1	
–43	12AT7	V21719	. . . TUBE, electron	1	
–44	5687	V21720	. . . TUBE, electron	1	
–45	TS102U03	—	. . . SHIELD, tube	2	
–46	6X4W	V21721	. . . TUBE, electron	1	
–47	6AH6	V21711	. . . TUBE, electron	1	
–48	TS102U02	—	. . . SHIELD, tube	10	

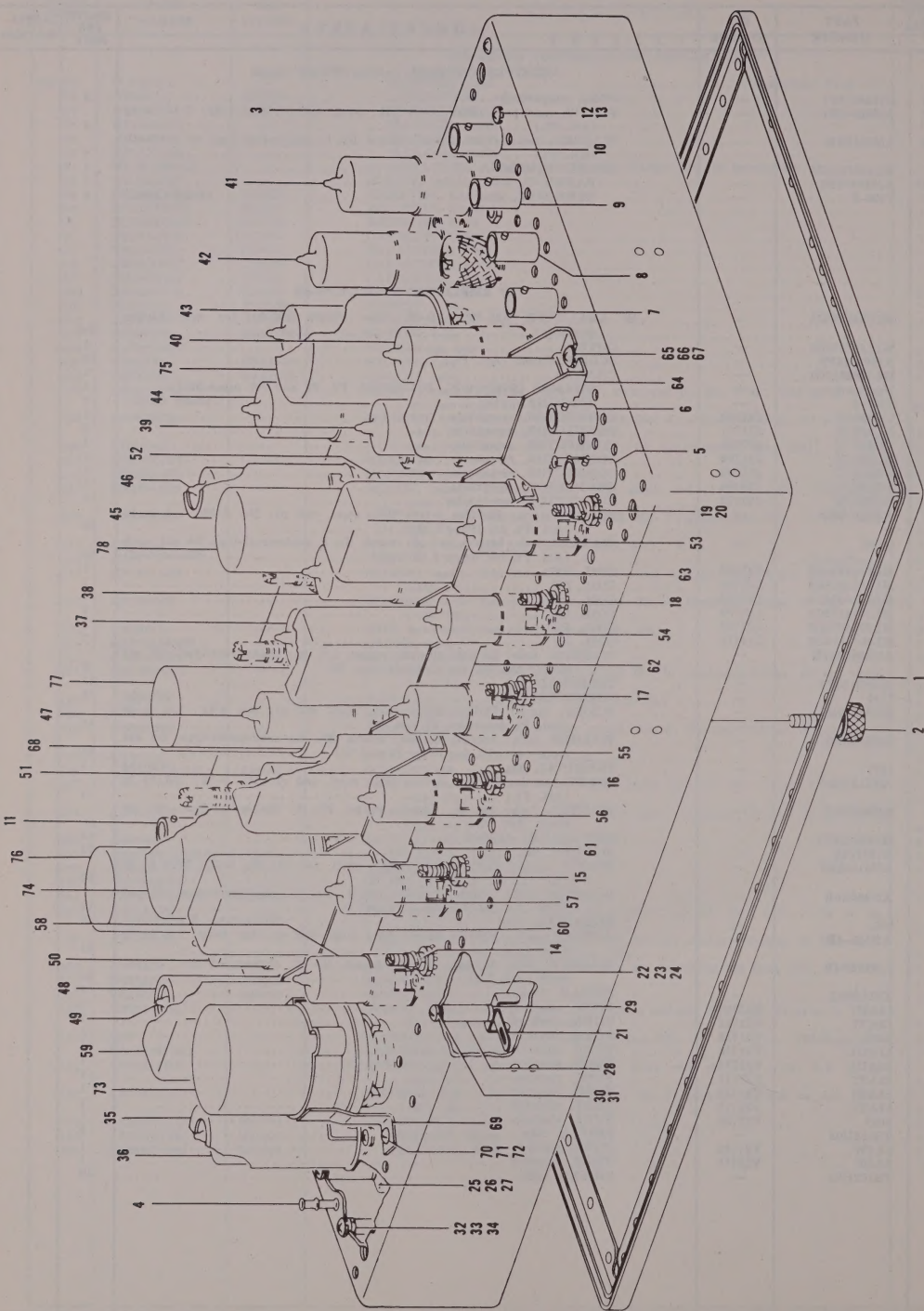

Figure 107. IF Amplifier AM–622/CPS–6B, Front View (Sheet 1 of 4 sheets, Index Nos. 1 thru 78)

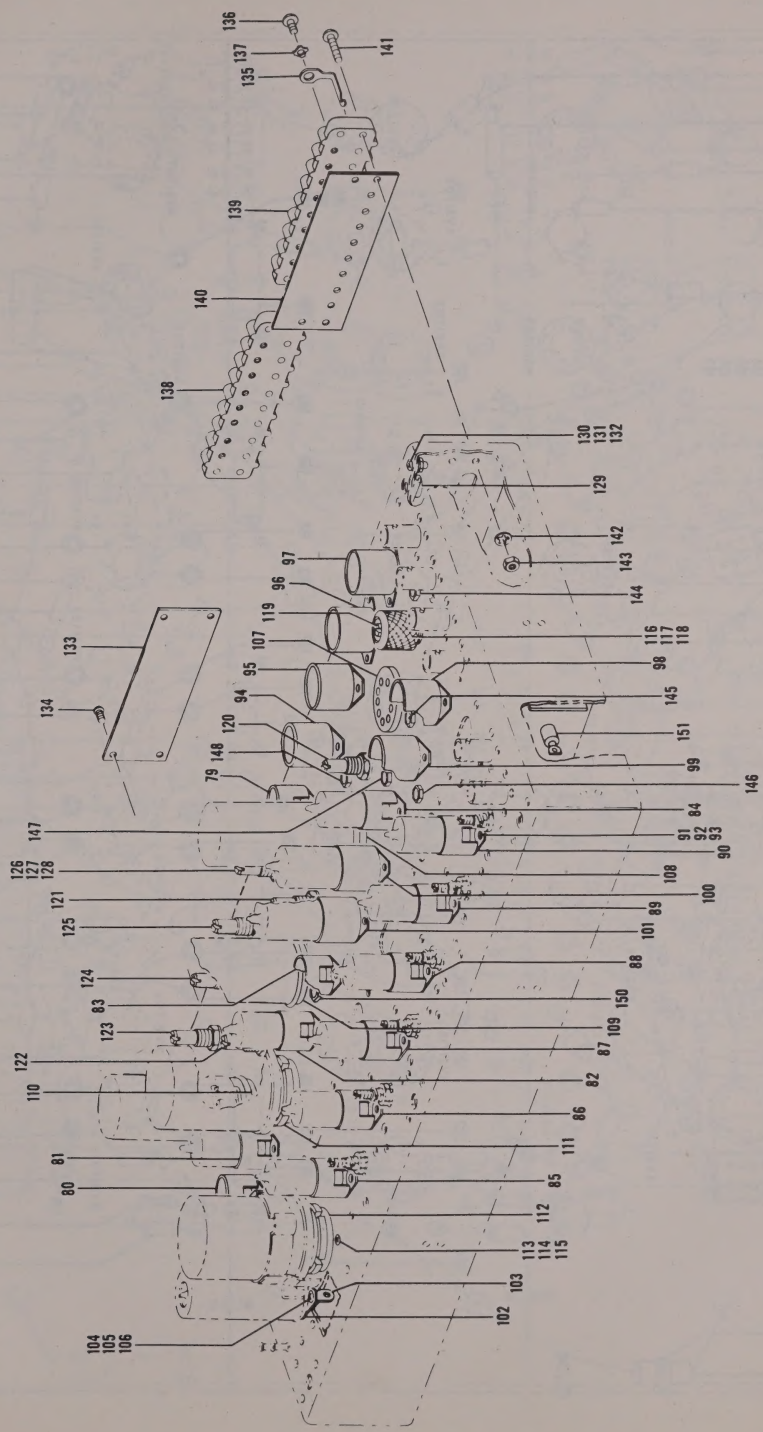

Figure 107. IF Amplifier AM–622/CPS–6B, Front View (Sheet 2 of 4 sheets, Index Nos. 79 thru 151)

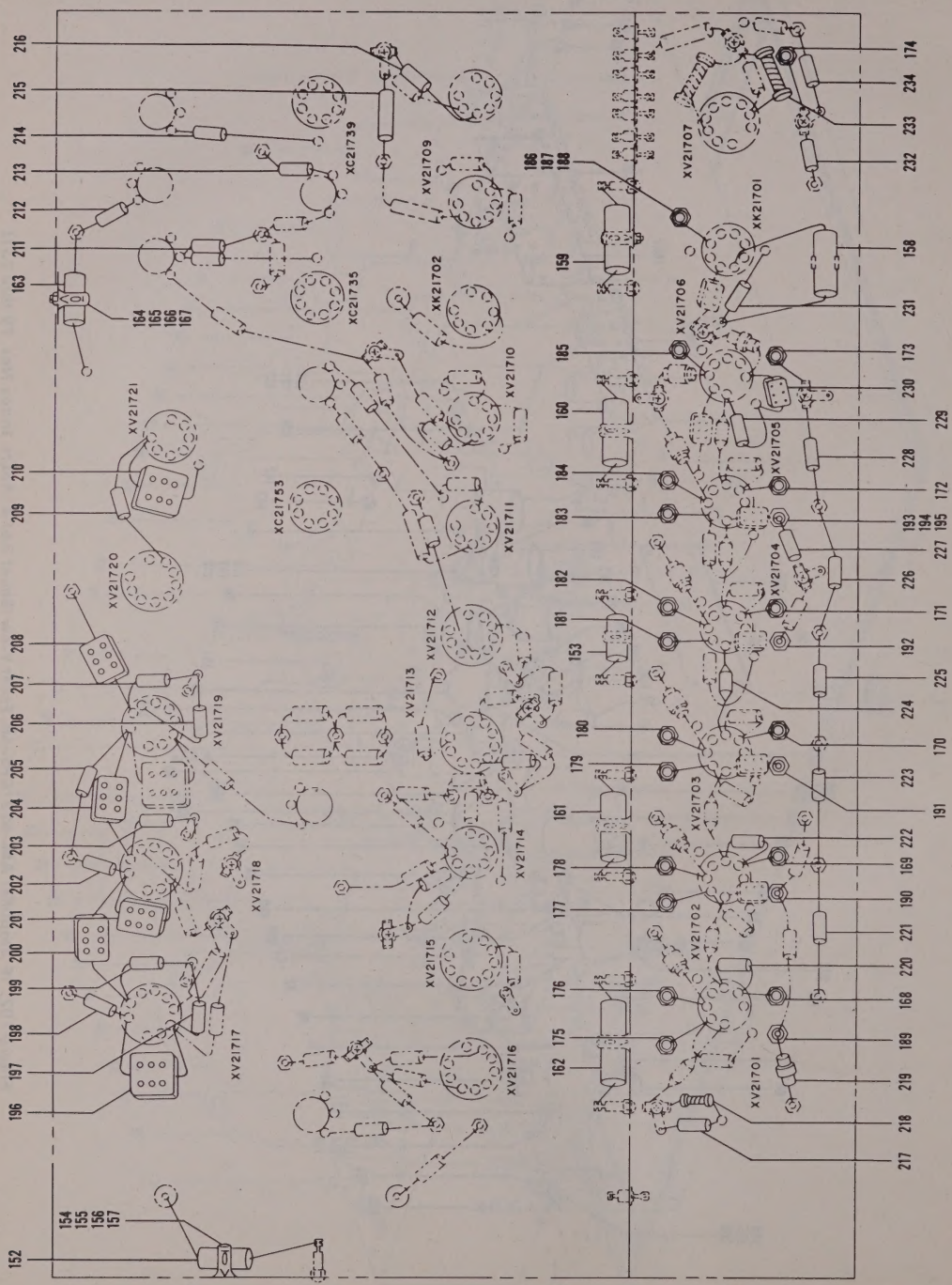

Figure 107. IF Amplifier AM–622/CPS–6B, Bottom View (Sheet 3 of 4 sheets, Index Nos. 152 thru 234)

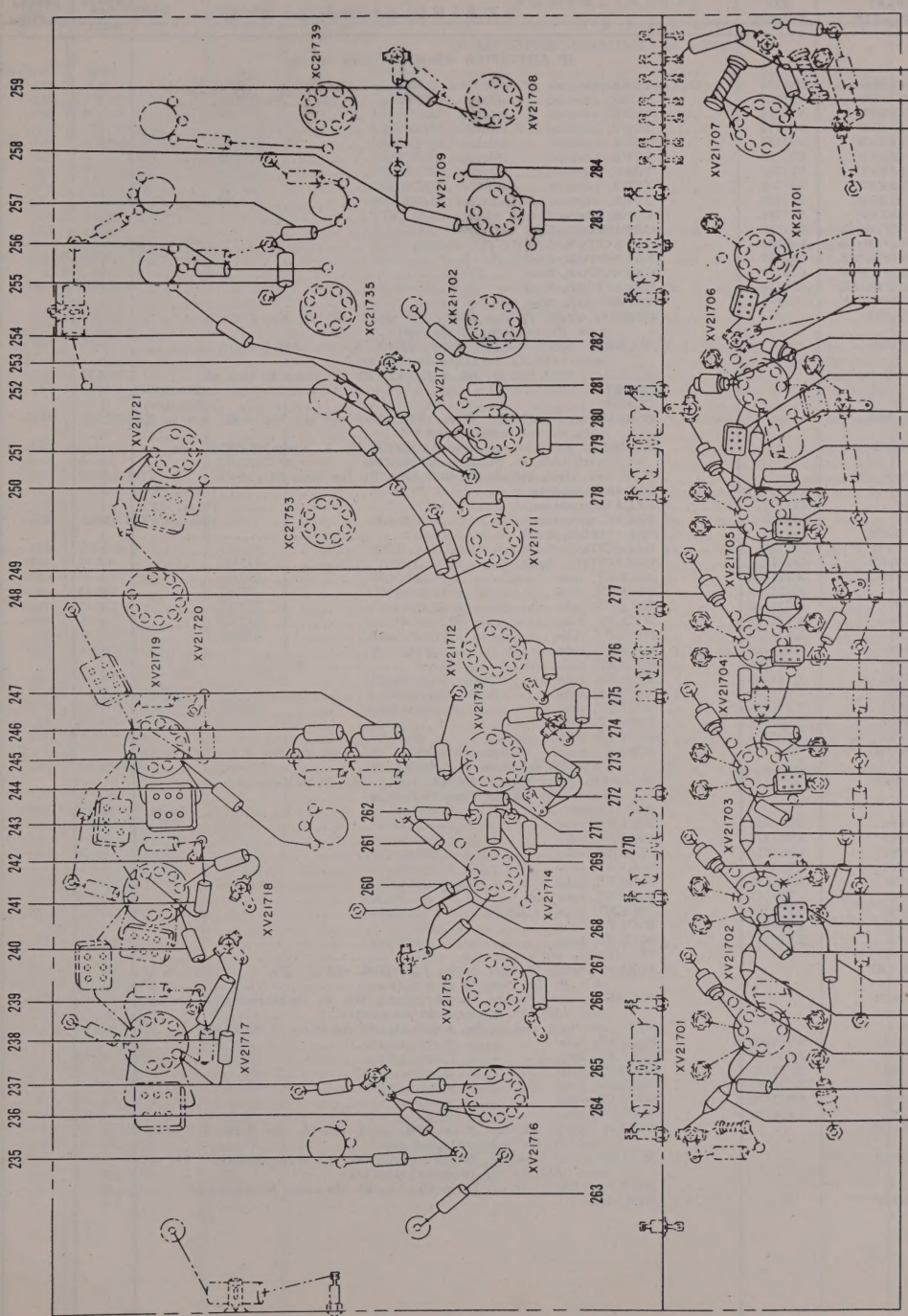

Figure 107. IF Amplifier AM–622/CPS–6B, Bottom View (Sheet 4 of 4 sheets, Index Nos. 235 thru 316)

FIG. & INDEX NO.	PART NUMBER	REF SYMBOL	NOMENCLATURE 1 2 3 4 5 6 7	UNITS PER ASSY	APPLI-CATION
			IF AMPLIFIER AM–622/CPS–6B (Cont)		
107–49	5725/6AS6W	V21708	. . . TUBE, electron	1	
–50	5725/6AS6W	V21709	. . . TUBE, electron	1	
–51	5654/6AK5W	V21710	. . . TUBE, electron	1	
–52	5725/6AS6W	V21714	. . . TUBE, electron	1	
–53	5654/6AK5W	V21701	. . . TUBE, electron	1	
–54	5654/6AK5W	V21702	. . . TUBE, electron	1	
–55	5654/6AK5W	V21703	. . . TUBE, electron	1	
–56	5654/6AK5W	V21704	. . . TUBE, electron	1	
–57	5654/6AK5W	V21705	. . . TUBE, electron	1	
–58	5726/6AL5W	V21706	. . . TUBE, electron	1	
–59	CP65B1FG504K	C21737	. . . CAPACITOR, fixed	1	
–60	CP65B1FG504K	C21734	. . . CAPACITOR, fixed	1	
–61	CP65B1FG504K	C21732	. . . CAPACITOR, fixed	1	
–62	CP65B1FG504K	C21730	. . . CAPACITOR, fixed	1	
–63	CP65B1FF105K	C21744	. . . CAPACITOR, fixed	1	
–64	CP65B1FG254K	C21746	. . . CAPACITOR, fixed	1	
–65	AN515–6R5	—	. . . SCREW, mach: Phillips drive; RH, steel, cad pl; No. 6–32; 5/16 in lg (Att. Pt. for items 59 thru 64)	12	
–66	AN936B6B	—	. . . WASHER, lock: bronze, tinned; round, No. 6; shakeproof-type, tw ext teeth (Att. Pt. for items 59 thru 64)	12	
–67	AN340–6	—	. . . NUT, hex: steel, cad pl; No. 6–32 (Att. Pt. for items 59 thru 64)	12	
–68	926M	—	. . . CLAMP (Birtcher)	3	
–69	926D	—	. . . CLAMP (Birtcher)	3	
–70	AN515–8R6	—	. . . SCREW, mach: Phillips drive; RH; steel, cad pl; No. 8–32; 3/8 in lg (Att. Pt. for items 68 and 69)	6	
–71	AN936B8B	—	. . . WASHER, lock: bronze, tinned; round, No. 8; shakeproof-type, tw ext teeth (Att. Pt. for items 68 and 69)	6	
–72	AN340–8	—	. . . NUT, hex: steel, cad pl; No. 8–32 (Att. Pt. for items 68 and 69)	6	
–73	SK5123	K21701	. . . RELAY, armature (Clare CP)	1	
–74	SK5123	K21702	. . . RELAY, armature (Clare CP)	1	
–75	SK5123	K21703	. . . RELAY, armature (Clare CP)	1	
–76	CE51C500M	C21739	. . . CAPACITOR, fixed	1	
–77	CE52C550J	C21735	. . . CAPACITOR, fixed	1	
–78	CE51C250M	C21753	. . . CAPACITOR, fixed	1	
–79	TS102P01	XV21721	. . . SOCKET, tube	1	
–80	TS102P01	XV21708	. . . SOCKET, tube	1	
–81	TS102P01	XV21709	. . . SOCKET, tube	1	
–82	TS102P01	XV21710	. . . SOCKET, tube	1	
–83	TS102P01	XV21711	. . . SOCKET, tube	1	
–84	TS102P01	XB21714	. . . SOCKET, tube	1	
–85	TS102P01	XV21706	. . . SOCKET, tube	1	
–86	TS102P01	XV21705	. . . SOCKET, tube	1	
–87	TS102P01	XV21704	. . . SOCKET, tube	1	
–88	TS102P01	XV21703	. . . SOCKET, tube	1	
–89	TS102P01	XV21702	. . . SOCKET, tube	1	
–90	TS102P01	XV21701	. . . SOCKET, tube	1	
–91	AN515–4R4	—	. . . SCREW, mach: Phillips drive; RH; steel, cad pl; No. 4–40; 1/4 in lg (Att. Pt. for items 79 thru 90)	24	
–92	AN936B4B	—	. . . WASHER, lock: bronze, tinned; round, No. 4; shakeproof-type, tw ext teeth (Att. Pt. for items 79 thru 90)	24	
–93	1060	—	. . . NUT, anchor (Cinch)	12	
–94	TS103P01	XV21720	. . . SOCKET, tube	1	
–95	TS103P01	XV21719	. . . SOCKET, tube	1	
–96	TS103P01	XV21718	. . . SOCKET, tube	1	
–97	TS103P01	XV21717	. . . SOCKET, tube	1	
–98	TS103P01	XV21716	. . . SOCKET, tube	1	
–99	TS103P01	XV21715	. . . SOCKET, tube	1	
–100	TS103P01	XV21713	. . . SOCKET, tube	1	
–101	TS103P01	XV21712	. . . SOCKET, tube	1	
–102	TS103P01	XV21707	. . . SOCKET, tube	1	
–103	A7135118P1	—	. . . TERMINAL, lug	11	
–104	AN515–4R5	—	. . . SCREW, mach: Phillips drive; RH; steel, cad pl; No. 4–40; 5/16 in lg (Att. Pt. for items 94 thru 103)	18	
–105	AN936B4B	—	. . . WASHER, lock: bronze, tinned; round, No. 4; shakeproof-type, tw ext teeth (Att. Pt. for items 94 thru 103)	18	
–106	AN340–4	—	. . . NUT, hex: steel, cad pl; No. 4–40 (Att. Pt. for items 94 thru 103)	18	
–107	TS101P01	XK21703	. . . SOCKET, tube	1	
–108	TS101P01	XC21753	. . . SOCKET, tube	1	
–109	TS101P01	XC21735	. . . SOCKET, tube	1	
–110	TS101P01	XC21739	. . . SOCKET, tube	1	
–111	TS101P01	XK21702	. . . SOCKET, tube	1	
–112	TS101P01	XK21701	. . . SOCKET, tube	1	
–113	AN515–6R6	—	. . . SCREW, mach: Phillips drive; RH; steel, cad pl; No. 6–32; 3/8 in lg (Att. Pt. for items 107 thru 112)	12	
–114	AN936B6B	—	. . . WASHER, lock: bronze, tinned; round, No. 6; shakeproof-type, tw ext teeth (Att. Pt. for items 107 thru 112)	12	
–115	AN340–6	—	. . . NUT, hex: steel, cad pl; No. 6–32 (Att. Pt. for items 107 thru 112)	12	
–116	M7481469P1	—	. . . NUT, lock	8	

FIG. & INDEX NO.	PART NUMBER	REF SYMBOL	NOMENCLATURE 1 2 3 4 5 6 7	UNITS PER ASSY	APPLI-CATION
			IF AMPLIFIER AM–622/CPS–6B (Cont)		
107–117	10061	—	. . . COLLET .....(Millen)	8	
–118	1920–2	—	. . . WASHER, lock (Att. Pt. for items 116 and 117).....(Shakeproof)	8	
–119	P7770835P12	R21762	. . . RESISTOR, variable	1	
–120	P7770835P37	R21779	. . . RESISTOR, variable	1	
–121	P7770835P27	R21735	. . . RESISTOR, variable	1	
–122	P7770835P22	R21765	. . . RESISTOR, variable	1	
–123	P7770835P4	R21747	. . . RESISTOR, variable	1	
–124	P7770835P1	R21793	. . . RESISTOR, variable	1	
–125	P7770835P35	R21792	. . . RESISTOR, variable	1	
–126	P7770835P11	R21790	. . . RESISTOR, variable	1	
–127	K7870535P2	—	. . . NUT, hex (Att. Pt. for items 119 thru 126)	8	
–128	1920–2	—	. . . WASHER, lock (Att. Pt. for items 119 thru 126).....(Shakeproof)	8	
–129	H55S420SNL	—	. . . NUT, anchor: 1/8 RH thread .....(Boots Aircraft)	6	
–130	AN505–4R5	—	. . . SCREW, mach: Phillips drive; FH; steel, cad pl; No. 4–40; 5/16 in lg (Att. Pt.)	12	
–131	AN936B4B	—	. . . WASHER, lock: bronze, tinned; round, No. 4; shakeproof-type, tw ext teeth (Att. Pt.)	12	
–132	AN340–4	—	. . . NUT, hex: steel, cad pl; No. 4–40 (Att. Pt.)	12	
–133	NP156721A	—	. . . PLATE, identification	1	
–134	Coml	—	. . . SCREW, self-tapping: Phillips drive; Bind H; SS; No. 4–40; 3/16 in lg (Att. Pt.) .....(Shakeproof)	4	
–135	141–Y	—	. . . TERMINAL, lug .....(Jones HB)	16	
–136	AN515–6R4	—	. . . SCREW, mach: Phillips drive; RH; steel, cad pl; No. 6–32; 1/4 in lg (Att. Pt.)	16	
–137	AN936A6B	—	. . . WASHER, lock: bronze, tinned; round, No. 6; shakeproof-type, tw int teeth (Att. Pt.)	16	
–138	8–141	TB21701	. . . BOARD, terminal .....(Jones HB)	1	
–139	8–141	TB21702	. . . BOARD, terminal .....(Jones HB)	1	
–140	MSX8–141Y	—	. . . PLATE, identification .....(Jones HB)	2	
–141	AN515–6R10	—	. . . SCREW, mach: Phillips drive; RH; steel, cad pl; No. 6–32; 5/8 in lg (Att. Pt. for items 138, 139 and 140)	8	
–142	AN936B6B	—	. . . WASHER, lock: bronze, tinned; round, No. 6, shakeproof-type, tw ext teeth (Att. Pt. for items 138, 139 and 140)	8	
–143	AN340–6	—	. . . NUT, hex: steel, cad pl; No. 6–32 (Att. Pt. for items 138, 139 and 140)	8	
–144	D–207	J21711	. . . CONNECTOR, receptacle .....(Industrial Products)	1	
–145	D–207	J21709	. . . CONNECTOR, receptacle .....(Industrial Products)	1	
–146	D–207	J21708	. . . CONNECTOR, receptacle .....(Industrial Products)	1	
–147	D–207	J21707	. . . CONNECTOR, receptacle .....(Industrial Products)	1	
–148	D–207	J21710	. . . CONNECTOR, receptacle .....(Industrial Products)	1	
–149	D–207	J21713	. . . CONNECTOR, receptacle .....(Industrial Products)	1	
–150	AN936A416B	—	. . . WASHER, lock: bronze, tinned; round, 1/4 in; shakeproof-type, tw int teeth (Att. Pt. for items 144 thru 149)	6	
–151	P7770782P6	—	. . . TERMINAL, stud	9	
–152	CP26A1EF103V	C21763	. . . CAPACITOR, fixed	1	
–153	CP26A1EF103V	C21731	. . . CAPACITOR, fixed	1	
–154	500–500	—	. . . CLIP .....(Prestole Corp)	2	
–155	AN515–4R5	—	. . . SCREW, mach: Phillips drive; RH; steel, cad pl; No. 4–40; 5/16 in lg (Att. Pt.)	2	
–156	AB936B4B	—	. . . WASHER, lock: bronze, tinned; round, No. 4; shakeproof-type, tw ext teeth (Att. Pt.)	2	
–157	AN340–4	—	. . . NUT, hex: steel, cad pl; No. 4–40 (Att. Pt.)	2	
–158	CP26A1EF503K	C21741	. . . CAPACITOR, fixed	1	
–159	CP26A1EF503K	C21736	. . . CAPACITOR, fixed	1	
–160	CP26A1EF503K	C21733	. . . CAPACITOR, fixed	1	
–161	CP26A1EF503K	C21743	. . . CAPACITOR, fixed	1	
–162	CP26A1EF104K	C21745	. . . CAPACITOR, fixed	1	
–163	CP26A1EF104K	C21762	. . . CAPACITOR, fixed	1	
–164	500–625	—	. . . CLIP .....(Prestole Corp)	6	
–165	AN515–4R5	—	. . . SCREW, mach: Phillips drive; RH; steel, cad pl; No. 4–40; 5/16 in lg (Att. Pt.)	6	
–166	AN936B4B	—	. . . WASHER, lock: bronze, tinned; round, No. 4; shakeproof-type, tw ext teeth (Att. Pt.)	6	
–167	AN340–4	—	. . . NUT, hex: steel, cad pl; No. 4–40 (Att. Pt.)	6	
–168	M7483176P4	C21704	. . . CAPACITOR, fixed	1	
–169	M7483176P4	C21709	. . . CAPACITOR, fixed	1	
–170	M7483176P4	C21714	. . . CAPACITOR, fixed	1	
–171	M7483176P4	C21719	. . . CAPACITOR, fixed	1	
–172	M7483176P4	C21724	. . . CAPACITOR, fixed	1	
–173	M7483176P4	C21727	. . . CAPACITOR, fixed	1	
–174	M7483176P4	C21729	. . . CAPACITOR, fixed	1	
–175	M7483176P5	C21703	. . . CAPACITOR, fixed	1	
–176	M7483176P4	C21756	. . . CAPACITOR, fixed	1	
–177	M7483176P5	C21708	. . . CAPACITOR, fixed	1	
–178	M7483176P4	C21757	. . . CAPACITOR, fixed	1	
–179	M7483176P5	C21713	. . . CAPACITOR, fixed	1	
–180	M7483176P4	C21758	. . . CAPACITOR, fixed	1	
–181	M7483176P5	C21718	. . . CAPACITOR, fixed	1	
–182	M7483176P4	C21759	. . . CAPACITOR, fixed	1	

FIG. & INDEX NO.	PART NUMBER	REF SYMBOL	NOMENCLATURE 1 2 3 4 5 6 7	UNITS PER ASSY	APPLI-CATION
			IF AMPLIFIER AM–622/CPS–6B (Cont)		
107–183	M7483176P5	C21723	. . . CAPACITOR, fixed	1	
–184	M7483176P4	C21760	. . . CAPACITOR, fixed	1	
–185	M7483176P4	C21761	. . . CAPACITOR, fixed	1	
–186	M7483176P4	C21740	. . . CAPACITOR, fixed	1	
–187	AN515–4R4	—	. . . SCREW, mach: Phillips drive; RH; steel, cad pl; No. 4–40; 1/4 in lg (Att. Pt. for items 168 thru 186)	19	
–188	AN936B4B	—	. . . WASHER, lock: bronze, tinned; round, No. 4; shakeproof-type, tw ext teeth (Att. Pt. for items 168 thru 186)	19	
–189	K7001403P7	C21702	. . . CAPACITOR, fixed	1	
–190	K7001403P7	C21706	. . . CAPACITOR, fixed	1	
–191	K7001403P7	C21711	. . . CAPACITOR, fixed	1	
–192	K7001403P7	C21716	. . . CAPACITOR, fixed	1	
–193	K7001403P7	C21721	. . . CAPACITOR, fixed	1	
–194	AN340–6	—	. . . NUT, hex: steel, cad pl; No. 6–32 (Att. Pt. for items 189 thru 193)	5	
–195	AN936B6B	—	. . . WASHER, lock: bronze, tinned; round, No. 6; shakeproof-type, tw ext teeth (Att. Pt. for items 189 thru 193)	5	
–196	CM30D152J	C21747	. . . CAPACITOR, fixed	1	
–197	RC20BF152J	R21769	. . . RESISTOR, fixed	1	
–198	RC20BF333J	R21771	. . . RESISTOR, fixed	1	
–199	RC20BF473J	R21770	. . . RESISTOR, fixed	1	
–200	CM20C101J	C21748	. . . CAPACITOR, fixed	1	
–201	CM20C151J	C21749	. . . CAPACITOR, fixed	1	
–202	RC20BF223J	R21775	. . . RESISTOR, fixed	1	
–203	RC20BF333J	R21777	. . . RESISTOR, fixed	1	
–204	CM20C101J	C21750	. . . CAPACITOR, fixed	1	
–205	RC20BF223J	R21784	. . . RESISTOR, fixed	1	
–206	RC20BF471J	R21781	. . . RESISTOR, fixed	1	
–207	RC20BF102J	R21785	. . . RESISTOR, fixed	1	
–208	CM20C101J	C21755	. . . CAPACITOR, fixed	1	
–209	RC20BF224J	R21786	. . . RESISTOR, fixed	1	
–210	CM30D222J	C21754	. . . CAPACITOR, fixed	1	
–211	RC20BF104J	R21791	. . . RESISTOR, fixed	1	
–212	RC20BF220J	R21794	. . . RESISTOR, fixed	1	
–213	RC20BF154J	R21764	. . . RESISTOR, fixed	1	
–214	RC20BF470J	R21797	. . . RESISTOR, fixed	1	
–215	RC42BF152J	R21744	. . . RESISTOR, fixed	1	
–216	RC20BF221J	R21746	. . . RESISTOR, fixed	1	
–217	RC20BF152J	R21702	. . . RESISTOR, fixed	1	
–218	C7704915P43	R21701	. . . RESISTOR, fixed	1	
–219	ML7406581G1	L21701	. . . COIL, RF	1	
–220	RC20BF332J	R21704	. . . RESISTOR, fixed	1	
–221	RC20BF221J	R21705	. . . RESISTOR, fixed	1	
–222	RC20BF332J	R21708	. . . RESISTOR, fixed	1	
–223	RC20BF221J	R21709	. . . RESISTOR, fixed	1	
–224	K7115115P2	C21715	. . . CAPACITOR, fixed	1	
–225	RC20BF221J	R21713	. . . RESISTOR, fixed	1	
–226	RC20BF221J	R21717	. . . RESISTOR, fixed	1	
–227	RC20BF221J	R21718	. . . RESISTOR, fixed	1	
–228	RC20BF221J	R21721	. . . RESISTOR, fixed	1	
–229	P7702920P5	C21726	. . . CAPACITOR, fixed	1	
–230	P7702920P24	C21728	. . . CAPACITOR, fixed	1	
–231	RC20BF682J	R21722	. . . RESISTOR, fixed	1	
–232	RC20BF154J	R21725	. . . RESISTOR, fixed	1	
–233	P7700764P85	R21724	. . . RESISTOR, fixed	1	
–234	RC20BF333J	R21726	. . . RESISTOR, fixed	1	
–235	RC20BF104J	R21763	. . . RESISTOR, fixed	1	
–236	RC20BF104J	R21761	. . . RESISTOR, fixed	1	
–237	RC20BF683J	R21778	. . . RESISTOR, fixed	1	
–238	RC20BF105J	R21767	. . . RESISTOR, fixed	1	
–239	RC42BF153J	R21768	. . . RESISTOR, fixed	1	
–240	RC20BF225J	R21773	. . . RESISTOR, fixed	1	
–241	RC20BF222J	R21776	. . . RESISTOR, fixed	1	
–242	RC20BF223J	R21774	. . . RESISTOR, fixed	1	
–243	CM35D472J	C21751	. . . CAPACITOR, fixed	1	
–244	RC20BF185J	R21780	. . . RESISTOR, fixed	1	
–245	RC20BF104J	R21728	. . . RESISTOR, fixed	1	
–246	RC20BF102J	R21789	. . . RESISTOR, fixed	1	
–247	ML7406581G1	L21708	. . . COIL, RF	1	
–248	RC30BF222J	R21737	. . . RESISTOR, fixed	1	
–249	RC20BF334J	R21732	. . . RESISTOR, fixed	1	
–250	RC20BF332J	R21740	. . . RESISTOR, fixed	1	
–251	RC20BF333J	R21734	. . . RESISTOR, fixed	1	
–252	RC20BF104J	R21736	. . . RESISTOR, fixed	1	
–253	RC20BF102J	R21803	. . . RESISTOR, fixed	1	
–254	RC20BF682J	R21798	. . . RESISTOR, fixed	1	
–255	RC20BF681J	R21802	. . . RESISTOR, fixed	1	
–256	RC20BF103J	R21788	. . . RESISTOR, fixed	1	

FIG. & INDEX NO.	PART NUMBER	REF SYMBOL	NOMENCLATURE 1 2 3 4 5 6 7	UNITS PER ASSY	APPLI-CATION
			IF AMPLIFIER AM–622/CPS–6B (Cont)		
107–257	RC20BF154J	R21766	. . . RESISTOR, fixed	1	
–258	RC30BF332J	R21743	. . . RESISTOR, fixed	1	
–259	RC20BF221J	R21796	. . . RESISTOR, fixed	1	
–260	RC20BF683J	R21756	. . . RESISTOR, fixed	1	
–261	RC20BF104J	R21757	. . . RESISTOR, fixed	1	
–262	RC20BF104J	R21752	. . . RESISTOR, fixed	1	
–263	RC20BF152J	R21801	. . . RESISTOR, fixed	1	
–264	RC20BF102J	R21760	. . . RESISTOR, fixed	1	
–265	RC20BF102J	R21759	. . . RESISTOR, fixed	1	
–266	RC20BF104J	R21758	. . . RESISTOR, fixed	1	
–267	RC20BF104J	R21754	. . . RESISTOR, fixed	1	
–268	RC20BF152J	R21755	. . . RESISTOR, fixed	1	
–269	RC20BF104J	R21753	. . . RESISTOR, fixed	1	
–270	RC20BF682J	R21750	. . . RESISTOR, fixed	1	
–271	RC20BF472J	R21751	. . . RESISTOR, fixed	1	
–272	RC20BF103J	R21729	. . . RESISTOR, fixed	1	
–273	RC20BF563J	R21730	. . . RESISTOR, fixed	1	
–274	RC20BF105J	R21731	. . . RESISTOR, fixed	1	
–275	CM35D472J	C21764	. . . CAPACITOR, fixed	1	
–276	RC20BF334J	R21733	. . . RESISTOR, fixed	1	
–277	ML7405220G5	L21712	. . . COIL, RF	1	
–278	RC20BF104J	R21738	. . . RESISTOR, fixed	1	
–279	RC20BF152J	R21741	. . . RESISTOR, fixed	1	
–280	RC20BF152J	R21739	. . . RESISTOR, fixed	1	
–281	RC20BF104J	R21742	. . . RESISTOR, fixed	1	
–282	CM35D472J	C21765	. . . CAPACITOR, fixed	1	
–283	RC20BF151J	R21745	. . . RESISTOR, fixed	1	
–284	RC20BF102J	R21795	. . . RESISTOR, fixed	1	
–285	K7115115P2	C21701	. . . CAPACITOR, fixed	1	
–286	RC20BF103J	R21703	. . . RESISTOR, fixed	1	
–287	ML7405220G5	L21709	. . . COIL, RF	1	
–288	K7115115P2	C21705	. . . CAPACITOR, fixed	1	
–289	RC20BF221J	R21706	. . . RESISTOR, fixed	1	
–290	RC20BF103J	R21707	. . . RESISTOR, fixed	1	
–291	P7702920P5	C21707	. . . CAPACITOR, fixed	1	
–292	RC20BF221J	R21710	. . . RESISTOR, fixed	1	
–293	ML7405220G5	L21710	. . . COIL, RF	1	
–294	K7115115P2	C21710	. . . CAPACITOR, fixed	1	
–295	RC20BF103J	R21711	. . . RESISTOR, fixed	1	
–296	P7702920P5	C21712	. . . CAPACITOR, fixed	1	
–297	RC20BF332J	R21712	. . . RESISTOR, fixed	1	
–298	ML7405220G5	L21711	. . . COIL, RF	1	
–299	RC20BF103J	R21715	. . . RESISTOR, fixed	1	
–300	P7702920P5	C21717	. . . CAPACITOR, fixed	1	
–301	RC20BF221J	R21714	. . . RESISTOR, fixed	1	
–302	RC20BF332J	R21716	. . . RESISTOR, fixed	1	
–303	K7115115P2	C21720	. . . CAPACITOR, fixed	1	
–304	RC20BF103J	R21719	. . . RESISTOR, fixed	1	
–305	P7702920P5	C21722	. . . CAPACITOR, fixed	1	
–306	ML7405220G5	L21713	. . . COIL, RF	1	
–307	RC20BF332J	R21720	. . . RESISTOR, fixed	1	
–308	K7115115P2	C21725	. . . CAPACITOR, fixed	1	
–309	RC20BF104J	R21748	. . . RESISTOR, fixed	1	
–310	ML7405220G5	L21714	. . . COIL, RF	1	
–311	ML7406581G1	L21707	. . . COIL, RF	1	
–312	P7702920P28	C21742	. . . CAPACITOR, fixed	1	
–313	P7700764P85	R21723	. . . RESISTOR, fixed	1	
–314	RC20BF682J	R21800	. . . RESISTOR, fixed	1	
–315	RC40BF472J	R21799	. . . RESISTOR, fixed	1	
–316	RC20BF223J	R21727	. . . RESISTOR, fixed	1	

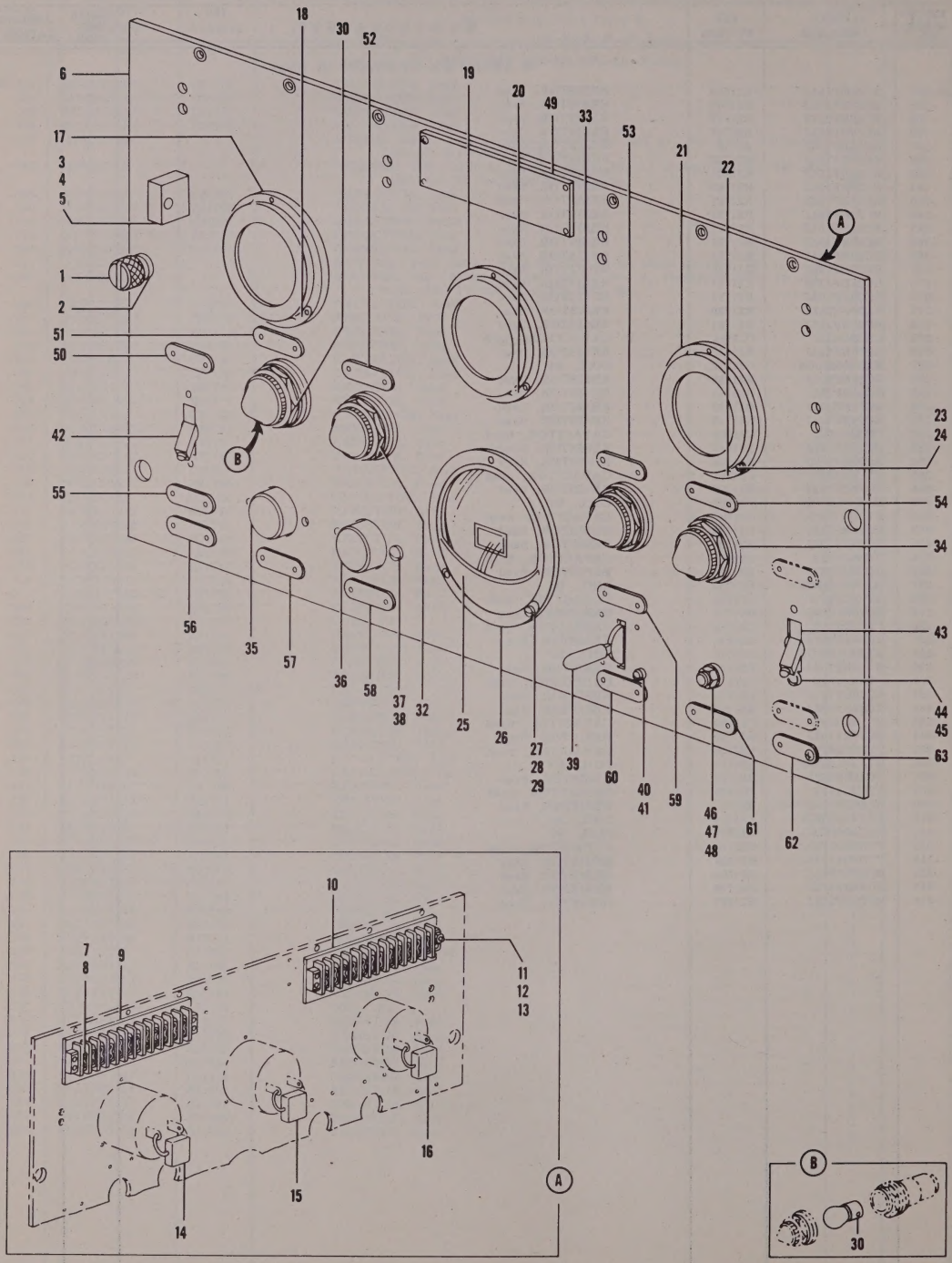

Figure 108. Control Panel SB–240/CPS–6B

FIG. & INDEX NO.	PART NUMBER	REF SYMBOL	NOMENCLATURE 1 2 3 4 5 6 7	UNITS PER ASSY	APPLI-CATION
			CONTROL PANEL SB–240/CPS–6B		
108–	ML7603827G1	—	. CONTROL PANEL SB–240/CPS–6B (See Figure 101–7 for next higher assembly)	Ref	
	ML7704223G1	—	. . PANEL	1	
–1	K7126123P2	—	. . . SCREW, captive	4	
–2	K7128235P2	—	. . . BUSHING	4	
–3	A7012796P1	—	. . . BLOCK, support	2	
–4	AN520B10R7	—	. . . SCREW, mach: Phillips drive; RH; brass, black oxidized; No. 10–32; 7/16 in lg (Att. Pt.)	4	
–5	AN936A10B	—	. . . WASHER, lock: bronze, tinned; round, No. 10; shakeproof-type, tw int teeth (Att. Pt.)	4	
–6	No Number	—	. . . PANEL (C7704223P2 and P4 assembled)	1	
–7	AN508–6–4	—	. . SCREW, mach: slot drive; RH; brass, tin pl; No. 6–32; 1/4 in lg	48	
–8	AN936A6B	—	. . WASHER, lock: bronze, tinned; round, No. 6; shakeproof-type, tw int teeth	48	
–9	MSX–12–141	TB21202	. . BOARD, terminal (Jones HB)	1	
–10	MSX–12–141	TB21201	. . BOARD, terminal (Jones HB)	1	
–11	AN515B8R12	—	. . SCREW, mach: Phillips drive; RH; brass, black oxidized; No. 8–32; 3/4 in lg (Att. Pt. for items 9 and 10)	8	
–12	AN936A8B	—	. . WASHER, lock: bronze, tinned; round, No. 8; shakeproof-type, tw int teeth (Att Pt. for items 9 and 10)	8	
–13	AN340–8	—	. . NUT, hex: steel, cad pl; No. 8–32 (Att. Pt. for items 9 and 10)	8	
–14	CM35D472J	C21201	. . CAPACITOR, fixed	1	
–15	CM35D472J	C21202	. . CAPACITOR, fixed	1	
–16	CM35D472J	C21203	. . CAPACITOR, fixed	1	
–17	MR26W500DCMA	M21203	. . METER, ammeter	1	
–18	NP151661D	—	. . PLATE, identification	1	
–19	MR26W100DCMA	M21202	. . METER, ammeter	1	
–20	NP144274A	—	. . PLATE, identification	1	
–21	MR26W150AFVV	M21201	. . METER, voltmeter	1	
–22	NP151661B	—	. . PLATE, identification	1	
–23	AN515B4R8	—	. . SCREW, mach: Phillips drive; RH; brass, black oxidized; No. 4–40; 1/2 in lg (Att. Pt. for items 17 thru 22)	9	
–24	AN936A4B	—	. . WASHER, lock: bronze, tinned; round, No. 4; shakeproof-type, tw int teeth (Att. Pt. for items 17 thru 22)	9	
–25	HM3ET	M21204	. . METER, time (Marion Elec Instru)	1	
–26	NP125298E	—	. . PLATE, identification	1	
–27	AN515B6R7	—	. . SCREW, mach: Phillips drive; RH; brass, black oxidized; No. 6–32; 7/16 in lg (Att. Pt. for items 25 and 26)	3	
–28	AN936A6B	—	. . WASHER, lock: bronze, tinned; round, No. 6; shakeproof-type, tw int teeth (Att. Pt. for items 25 and 26)	3	
–29	AN340–6	—	. . NUT, hex: steel, cad pl; No. 6–32 (Att. Pt. for items 25 and 26)	3	
–30	801002–511	XI21203	. . LIGHT, indicator (Dialco)	1	
–31	Coml	I21203	. . LAMP, incandescent: Mazda 6S6DC; 115 v, 6 w	1	
–32	801002–513	XI21202	. . LIGHT, indicator (Dialco)	1	
	Coml	I21202	. . LAMP, incandescent: Mazda 6S6DC; 115 v, 6 w (Ref item 31)	1	
–33	801002–514	XI21201	. . LIGHT, indicatoor (Dialco)	1	
	Coml	I21201	. . LAMP, incandescent: Mazda 6S6DC; 115 v, 6 w (Ref item 31)	1	
–34	801002–512	XI21204	. . LIGHT, indicator (Dialco)	1	
	Coml	I21204	. . LAMP, incandescent: Mazda 6S6DC; 115 v, 6 w (Ref item 31)	1	
–35	5729215G4	S21201	. . SWITCH, push (GE)	1	
–36	5729215G4	S21202	. . SWITCH, push (GE)	1	
–37	AN515B8R5	—	. . SCREW, mach: Phillips drive; RH; brass, black oxidized; No. 8–32; 5/16 in lg (Att. Pt. for items 35 and 36)	4	
–38	AN936A8B	—	. . WASHER, lock: bronze, tinned; round, No. 8; shakeproof-type, tw int teeth (Att. Pt. for items 35 and 36)	4	
–39	P7705502P2	S21203	. . SWITCH, toggle	1	
–40	AN515B4R5	—	. . SCREW, mach: Phillips drive; RH; brass, black oxidized; No. 4–40; 5/16 in lg (Att. Pt.)	4	
–41	AN936A4B	—	. . WASHER, lock: bronze, tinned; round, No. 4; shakeproof-type, tw int teeth (Att. Pt.)	4	
–42	C–6363–1–10	S21204	. . SWITCH, toggle: with plain tips (Spencer Thermo)	1	
–43	C–6363–1–5	S21205	. . SWITCH, toggle: with plain tips (Spencer Thermo)	1	
–44	AN515B8R7	—	. . SCREW, mach: Phillips drive; RH; brass, black oxidized; No. 8–32; 7/16 in lg (Att. Pt. for items 42 and 43)	4	
–45	AN936A8B	—	. . WASHER, lock: bronze, tinned; round, No. 8; shakeproof-type, tw int teeth (Att. Pt. for items 42 and 43)	4	
–46	K7109613P3	J21201	. . CONNECTOR, receptacle	1	
–47	K7870535P2	—	. . NUT, hex (Att. Pt.)	1	
–48	1920–2	—	. . WASHER, lock (Att. Pt.) (Shakeproof)	1	
–49	NP157561A	—	. . PLATE, identification	2	
–50	NP151500E	—	. . PLATE, identification	1	
–51	NP125984E	—	. . PLATE, identification	1	
–52	NP125984F	—	. . PLATE, identification	1	
–53	NP151500B	—	. . PLATE, identification	1	
–54	NP151500A	—	. . PLATE, identification	1	
–55	NP144269E	—	. . PLATE, identification	2	
–56	NP151500D	—	. . PLATE, identification	1	
–57	NP125984L	—	. . PLATE, identification	1	
–58	NP125984M	—	. . PLATE, identification	1	

FIG. & INDEX NO.	PART NUMBER	REF SYMBOL	1 2 3 4 5 6 7 NOMENCLATURE	UNITS PER ASSY	APPLI-CATION
			CONTROL PANEL SB-240/CPS-6B		
108-59	NP151494K	—	. . PLATE, identification	1	
-60	NP151494L	—	. . PLATE, identification	1	
-61	NP151500C	—	. . PLATE, identification	1	
-62	NP125984K	—	. . PLATE, identification	1	
-63	AN504C4R4	—	. . SCREW, self-tapping: Phillips drive; RH; SS; No. 4-40; 1/4 in lg (Att. Pt. for items 49 thru 62)	34	
			DUPLEXER CU-294/CPS-6B		
109-	ML7603859G1	E21003	. DUPLEXER CU-294/CPS-6B (See Figure 101-16 for next higher assembly)	Ref	
-1	ML7479372G3	E21006	. . STAGE MIXER (See Figure 110 for breakdown)	1	
-2	AN515-8R5	—	. . SCREW, mach: Phillips drive; RH; steel, cad pl; No. 8-32; 5/16 in lg (Att. Pt.)	2	
-3	AN936B8	—	. . WASHER, lock: bronze, tinned; round, No. 8; shakeproof-type, tw ext teeth (Att. Pt.)	2	
-4	1N21B	CR21003	. . CRYSTAL BLANK, quartz	1	
-5	K7003954P1	—	. . RESISTOR, fixed	1	
-6	B7407455P1	—	. . WAVE GUIDE SECTION	1	
-7	K7121957P1	—	. . GASKET	1	
-8	AN515-8R10	—	. . SCREW, mach: Phillips drive; RH; steel, cad pl; No. 8-32; 5/8 in lg (Att. Pt. for items 6 and 7)	8	
-9	AN936B8B	—	. . WASHER, lock: bronze, tinned; round, No. 8; shakeproof-type, tw ext teeth (Att. Pt. for items 6 and 7)	8	
-10	1185-2C	—	. . INSERT, threaded: 21/64 in lg (Att. Pt. for items 6 and 7)...(Heli-coil Corp)	8	
-11	K7121837P1	—	. . GASKET	1	
-12	PL7019476G1	—	. . CAP	14	
-13	A7012581P1	—	. . CAP	14	
-14	AN6227-8	—	. . PACKING	28	
-15	Z-1898	V21002	. . DUPLEXER (GE)	1	
-16	Z-1898	V21003	. . DUPLEXER (GE)	1	
-17	Z-1898	V21004	. . DUPLEXER (GE)	1	
-18	Z-1898	V21005	. . DUPLEXER (GE)	1	
-19	Z-1898	V21006	. . DUPLEXER (GE)	1	
-20	Z-1898	V21007	. . DUPLEXER (GE)	1	
-21	Z-1898	V21008	. . DUPLEXER (GE)	1	
-22	Z-1898	V21009	. . DUPLEXER (GE)	1	
-23	Z-1898	V21010	. . DUPLEXER (GE)	1	
-24	Z-1898	V21011	. . DUPLEXER (GE)	1	
-25	Z-1898	V21012	. . DUPLEXER (GE)	1	
-26	Z-1898	V21013	. . DUPLEXER (GE)	1	
-27	Z-1898	V21014	. . DUPLEXER (GE)	1	
-28	Z-1898	V21015	. . DUPLEXER (GE)	1	
-29	A7012543P1	—	. . HOLDER, duplexer	28	
-30	MT295-1	—	. . BUSHING (Metal Textile Co)	28	
-31	NP157554A	—	. . PLATE, identification	1	
-32	A7021710P1	—	. . PLATE, spacer	1	
-33	AN515B4R4	—	. . SCREW, mach: Phillips drive; RH; brass, black oxidized; No. 4-40; 1/4 in lg (Att. Pt. for items 31 and 32)	4	
-34	AN936A4B	—	. . WASHER, lock: bronze, tinned; round, No. 4; shakeproof-type, tw int teeth (Att. Pt. for items 31 and 32)	4	
-35	No Number	—	. . WAVE GUIDE SECTION (D7603858P1, K7129496P1, A7013938P1 and ML7603859P8, assembled)	1	

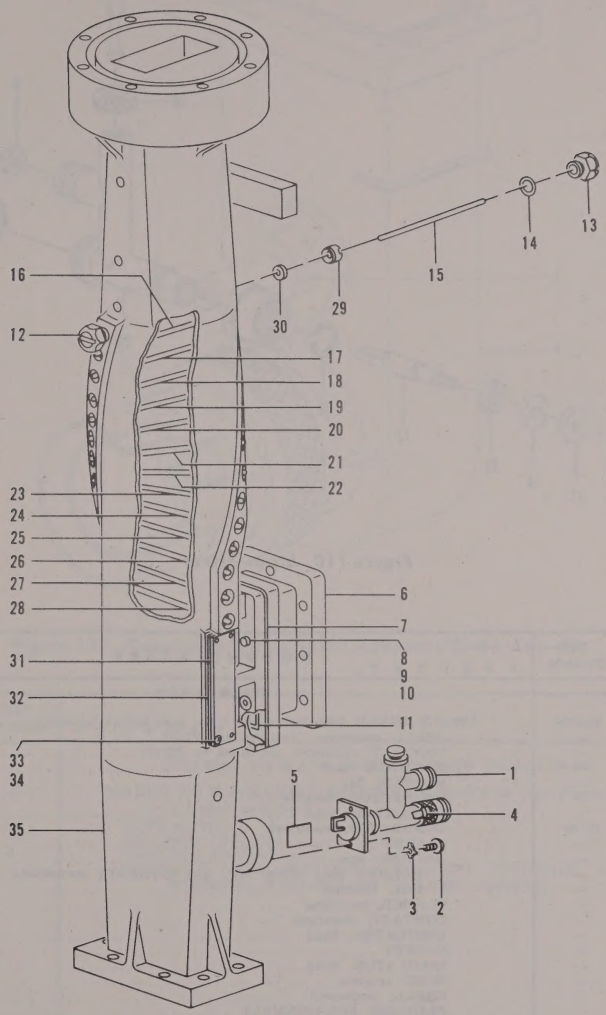

Figure 109. Duplexer CU–394/CPS–6B

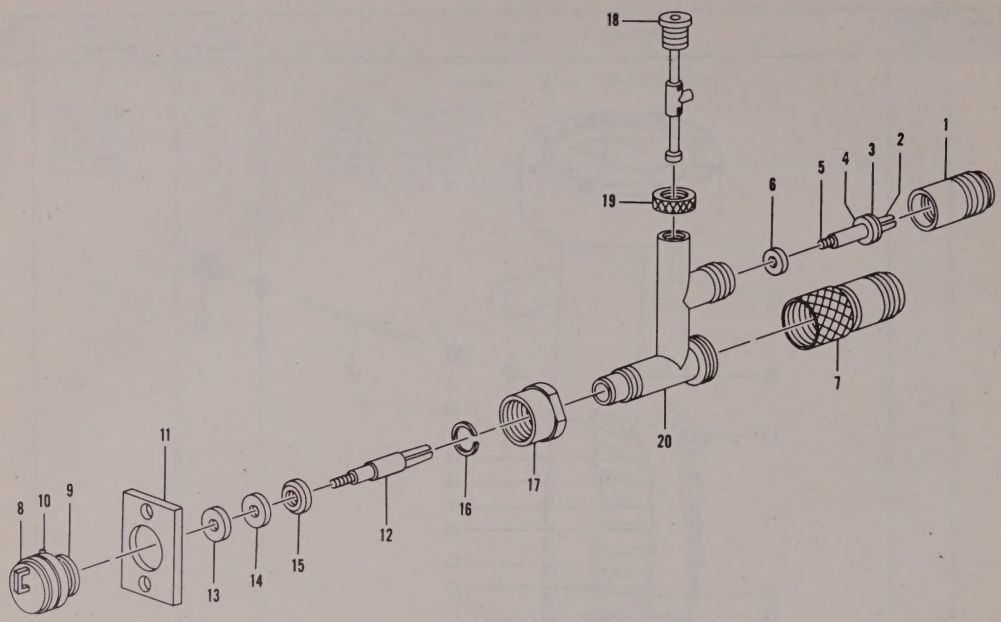

Figure 110. Stage Mixer

FIG. & INDEX NO.	PART NUMBER	REF SYMBOL	NOMENCLATURE (1 2 3 4 5 6 7)	UNITS PER ASSY	APPLI-CATION
			STAGE MIXER		
110–	ML7479372P1	E21006	. . STAGE MIXER (See Figure 109–1 for next higher assembly)	Ref	
–1	K7101575P1	—	. . . SHELL, connector (Included in J2710)	1	
–2	K7101576P1	—	. . . CONTACT, connector (Included in J2710)	1	
–3	K7101558P1	—	. . . RESISTOR, fixed	1	
–4	K7894291P1	—	. . . WASHER, flat	1	
–5	K7101577P1	—	. . . CONNECTOR, adapter	1	
–6	K7120345P1	—	. . . INSULATOR, bead	1	
–7	ML7101555G1	J2709	. . . CONNECTOR, receptacle	1	
–8	K7897765P1	—	. . . GASKET	1	
	ML7897781G2	—	. . . HOLDER, loop	1	
–9	No Number	—	. . . . HOLDER, loop (K7897761P1 and K7121808P1 assembled)	1	
–10	K7126791P1	—	. . . . PIN, locating	1	
–11	K7120348P1	—	. . . FLANGE, mounting	1	
–12	K7897766P1	—	. . . CONTACT, electrical	1	
–13	K7897767P1	—	. . . INSULATOR, bead	1	
–14	K7897758P1	—	. . . GASKET	1	
–15	K7897768P1	—	. . . INSULATOR, bead	1	
–16	K7120871P1	—	. . . RING, retainer	1	
–17	K7120347P1	—	. . . SHELL, connector	1	
–18	ML7894267G2	—	. . . PLUNGER SUBASSEMBLY	1	
–19	K7894288P1	—	. . . NUT, lock	1	
–20	No Number	—	. . . WAVE GUIDE SECTION (K7120346P1 and ML7120340G1, assembled)	1	

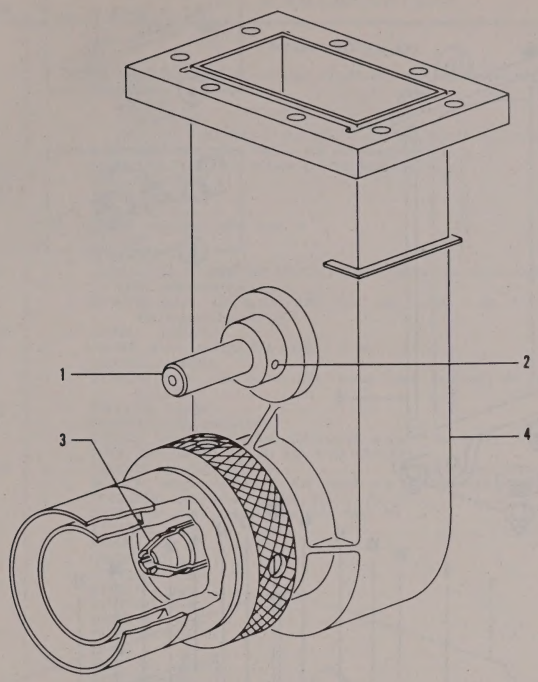

Figure 111. Coaxial to Wave Guide Adapter UG–84/CPS–6B

FIG. & INDEX NO.	PART NUMBER	REF SYMBOL	1 2 3 4 5 6 7 NOMENCLATURE	UNITS PER ASSY	APPLI-CATION
			COAXIAL TO WAVE GUIDE ADAPTER UG–84/CPS–6B		
111–	ML7703119G2	—	. COAXIAL TO WAVE GUIDE ADAPTER UG–84/CPS–6B (See Figure 101–39 for next higher assembly)	Ref	
–1	K7120832P2	—	. . POST, anchor	1	
–2	M7461888P35	—	. . PIN, taper (Att. Pt.)	1	
–3	M7479353P1	—	. . CONTACT, electrical	1	
–4	No Number	—	. . COUPLING, rigid (K7001285P1, K7004317P1, K7120301P2, K7120809P2, M7403803P1, M7404530P1 and P7703120P1, assembled)	1	

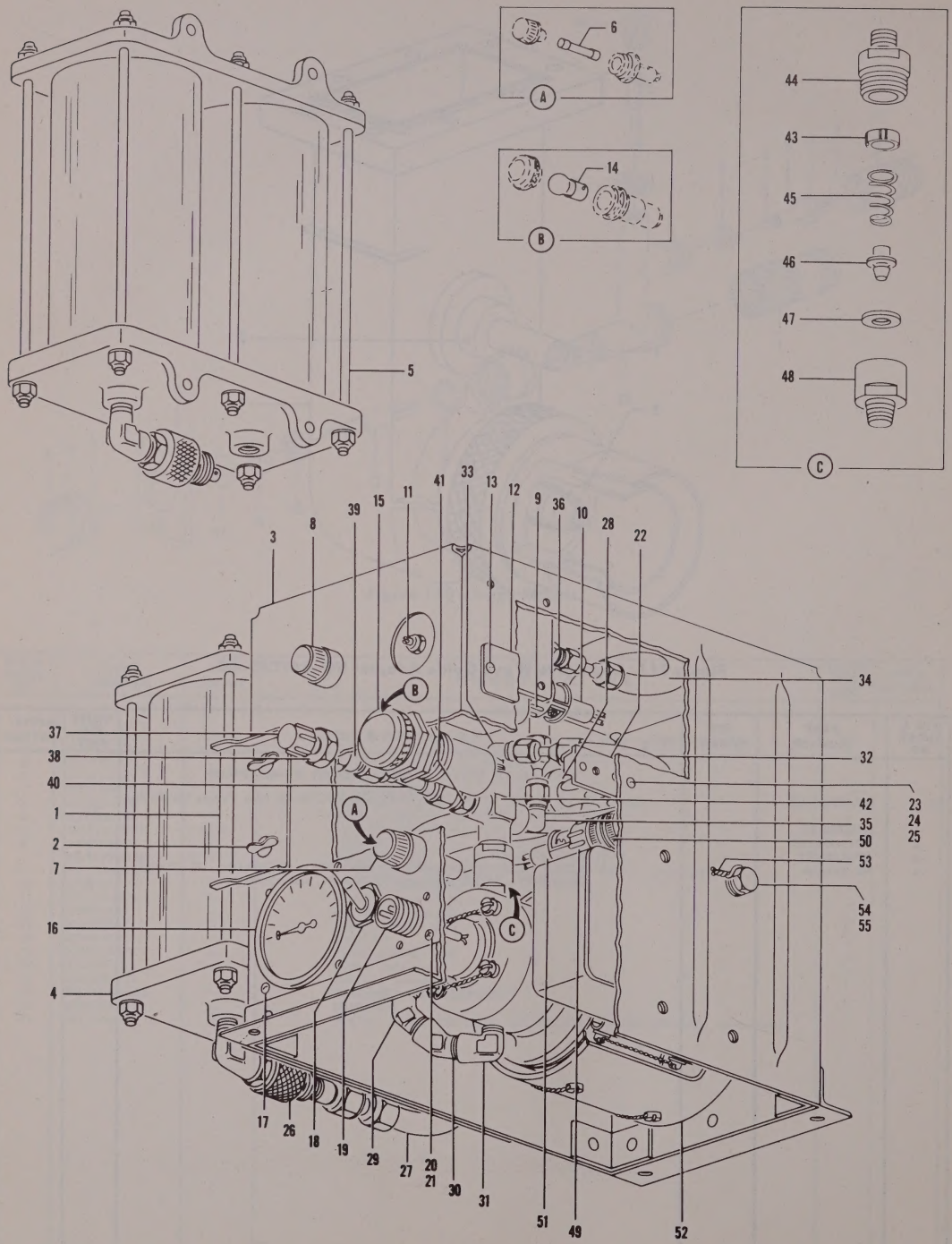

Figure 112. Pressurizing Kit

FIG. & INDEX NO.	PART NUMBER	REF SYMBOL	1 2 3 4 5 6 7 NOMENCLATURE	UNITS PER ASSY	APPLI-CATION
			PRESSURIZING KIT		
112–	RR9500B	—	. PRESSURIZING KIT (See Figure 101–58 for next higher assembly).....(Romec)	Ref	
	RG–9501	—	. . CHASSIS .....(Romec)	1	
–1	RG–9501–2	—	. . . CLAMP .....(Romec)	1	
–2	AWS–30	—	. . . FASTENER .....(Dzus)	2	
–3	No Number	—	. . . CHASSIS (RG–9501–1, RG–9501–3 and RG–9501–4 assembled).....(Romec)	1	
–4	RD–9505–1	—	. . DEHYDRATOR (See Figure 113 for breakdown).....(Romec)	1	
–5	RD–9505	—	. . DEHYDRATOR (See Figure 113 for breakdown).....(Romec)	1	
–6	HCM	XF22001	. . HOLDER, fuse .....(Buss)	1	
–7	ABS–1/16–30	F22001	. . FUSE, cartridge .....(Buss)	1	
–8	HCM	—	. . HOLDER, fuse .....(Buss)	1	
	ABS–1/16–30	—	. . FUSE, cartridge (Ref item 7) .....(Buss)	1	
–9	AN3057–4	—	. . CLAMP	1	
–10	RA–9506–2	—	. . MARKER, cable .....(Romec)	1	
–11	RB–9635–4	S22001	. . ABSOLUTE PRESSURE SWITCH (See Figure 114 for breakdown)..(Romec)	1	
–12	RA–9502	—	. . PLATE, identification .....(Romec)	1	
–13	AN515–6–6	—	. . SCREW, mach: slot drive; RH; steel, cad pl; No. 6–32; 3/8 in lg (Att. Pt. for items 11 and 12)	4	
–14	51101–111	XI22001	. . LIGHT, indicator .....(Dialco)	1	
–15	Coml	I22001	. . LAMP, glow: mazda 6S6; 115 v, 6 w.....	1	
–16	AN5771–3A	—	. . GAUGE, pressure	1	
–17	AN515B6–8	—	. . SCREW, mach: slot drive; RH; brass, black oxidized; No. 6–32; 1/2 in lg (Att. Pt.)	4	
–18	ST42A	S22002	. . SWITCH, toggle	1	
–19	AN3102–10SL4P	J22001	. . CONNECTOR, receptacle	1	
–20	AN515–4–6	—	. . SCREW, mach: slot drive; RH; steel, cad pl; No. 4–40; 3/8 in lg (Att. Pt.)	4	
–21	AN365–440	—	. . NUT, lock: steel, cad pl; No. 4–40 (Att. Pt.)	4	
–22	NAS–17–2–A	TB22001	. . BOARD, terminal.....(Northern Industrial Chemical)	1	
–23	AN515–4–6	—	. . SCREW, mach: slot drive; RH; steel, cad pl; No. 4–40; 3/8 in lg (Att. Pt.)	2	
–24	AN935–4L	—	. . WASHER, lock: steel, cad pl; No. 4 (Att. Pt.)	2	
–25	AN340–4	—	. . NUT, hex: steel, cad pl; No. 4–40 (Att. Pt.)	2	
–26	6–121	—	. . FITTING, pipe .....(Wiggins Oil Tool)	1	
–27	RA–8365–8	—	. . HOSE .....(Romec)	1	
–28	AN931–8S13	—	. . GROMMET	1	
–29	AN823–4D	—	. . FITTING, pipe	1	
–30	AN915–1D	—	. . FITTING, pipe	1	
–31	AN914–1D	—	. . FITTING, pipe	1	
–32	RA–8365–7	—	. . HOSE .....(Romec)	1	
–33	AN822–2D	—	. . FITTING, pipe	1	
–34	RA–8365–7	—	. . HOSE .....(Romec)	1	
–35	AN822–2D	—	. . FITTING, pipe	1	
–36	AN816–2D	—	. . FITTING, pipe	1	
–37	1604–167	—	. . CAP .....(White SS)	1	
–38	AN832–4D	—	. . FITTING, pipe	1	
–39	AN924–4D	—	. . FITTING, pipe	1	
–40	RB–9503	—	. . TUBING .....(Romec)	1	
–41	AN816–4D	—	. . FITTING, pipe	1	
–42	AN918–1D	—	. . FITTING, pipe	1	
	RA–8026B	—	. . VALVE, check .....(Romec)	1	
	RA–8125	—	. . . PLUG, machine thread .....(Romec)	1	
–43	RA–7933	—	. . . . GUIDE, valve .....(Romec)	1	
–44	RA–8127	—	. . . . PLUG, machine thread .....(Romec)	1	
–45	RA–7934	—	. . . . SPRING .....(Romec)	1	
–46	RA–7924	—	. . . . VALVE, air .....(Romec)	1	
–47	RA–7925	—	. . . . GASKET .....(Romec)	1	
–48	RA–8126	—	. . . . BODY, valve .....(Romec)	1	
–49	AN3057–4	—	. . CLAMP	1	
–50	AN3106A–10SL–4S	P22002	. . CONNECTOR, plug	1	
–51	RA–9506–1	—	. . MARKER, cable .....(Romec)	1	
–52	RG–8160–3	B22001	. . AIR COMPRESSOR HD–70/U (See Figure 115 for breakdown).....(Romec)	1	
–53	AN995C20	—	. . WIRE, mechanical (Att. Pt.)	2	
–54	AN74A3	—	. . BOLT, mach: hex head; steel, cad pl; 1/4 in–20; 15/32 in lg (Att. Pt.).....	4	
–55	AN960–416	—	. . WASHER, flat: steel, cad pl; 1/4 in (Att. Pt.)	4	

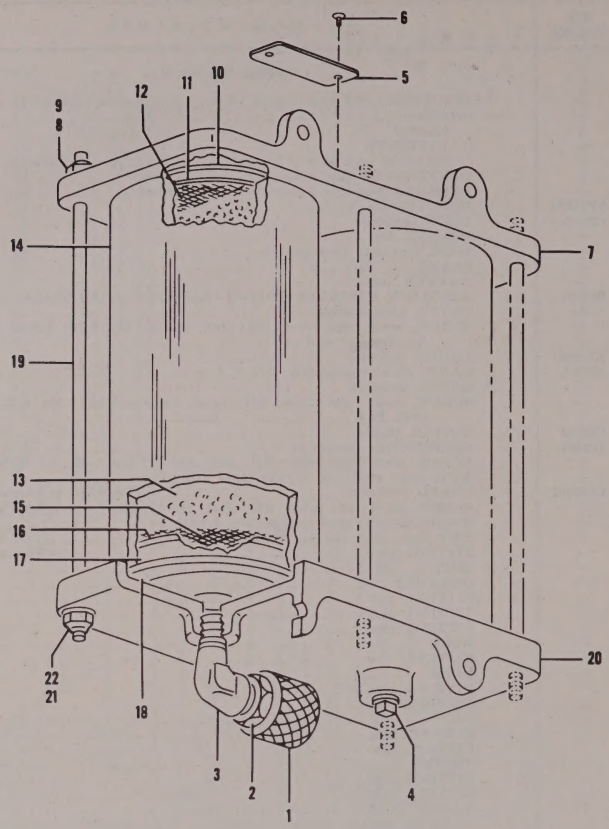

Figure 113. Dehydrator

FIG. & INDEX NO.	PART NUMBER	REF SYMBOL	NOMENCLATURE 1 2 3 4 5 6 7	UNITS PER ASSY	APPLI-CATION
			DEHYDRATOR		
			APPLICATION CODING		
			Application Code — Assembly		
			a — RD–9505–1		
			b — RD–9505		
113–	RD–9505–1	—	. . DEHYDRATOR (See Figure 112–4 for next higher assembly) (Romec)	Ref	a
113–	RD–9505	—	. . DEHYDRATOR (See Figure 112–5 for next higher assembly) (Romec)	Ref	b
–1	8–199	—	. . . CAP (Wiggins)	1	b
–2	6–146	—	. . . FITTING, pipe (Wiggins)	1	All
–3	AN914–1D	—	. . . FITTING, pipe	1	All
–4	AN913–1D	—	. . . FITTING, pipe	1	All
–5	RA–5575	—	. . . PLATE, identification (Romec)	1	All
–6	AN535–00–2	—	. . . SCREW, self-tapping: slot drive; RH; steel, cad pl; No. 00; 1/8 in lg (Att. Pt.)	2	All

FIG. & INDEX NO.	PART NUMBER	REF SYMBOL	1 2 3 4 5 6 7 NOMENCLATURE	UNITS PER ASSY	APPLI-CATION
			DEHYDRATOR (Cont)		
113–7	RB–8081–1	—	. . . COVER ....(Romec)	1	All
–8	AN363–1032	—	. . . NUT, lock: steel, cad pl; No. 10–32 (Att. Pt.)	6	All
–9	AN960–10	—	. . . WASHER, flat: steel, cad pl; No. 10 (Att. Pt.)	6	All
–10	RA–9662	—	. . . GASKET ....(Romec)	2	All
–11	RA–9661	—	. . . PAD, air cleaner ....(Romec)	2	All
–12	RA–8092	—	. . . CLEANER, air ....(Romec)	2	All
–13	RA–8093	—	. . . DESSICANT ....(Romec)	AR	All
–14	RB–9664	—	. . . TUBE, glass ....(Romec)	2	All
–15	RA–8092	—	. . . CLEANER, air ....(Romec)	2	All
–16	RA–9661	—	. . . PAD, air cleaner ....(Romec)	2	All
–17	RA–9666	—	. . . CLEANER, air ....(Romec)	2	All
–18	RA–9662	—	. . . GASKET ....(Romec)	2	All
–19	RA–8091	—	. . . STUD ....(Romec)	6	All
–20	AN363–1032	—	. . . NUT, lock: steel, cad pl; No. 10–32 (Att. Pt.)	6	All
–21	AN960–10	—	. . . WASHER, flat: steel, cad pl; No. 10 (Att. Pt.)	6	All
–22	RB–8082–1	—	. . . COVER ....(Romec)	1	All

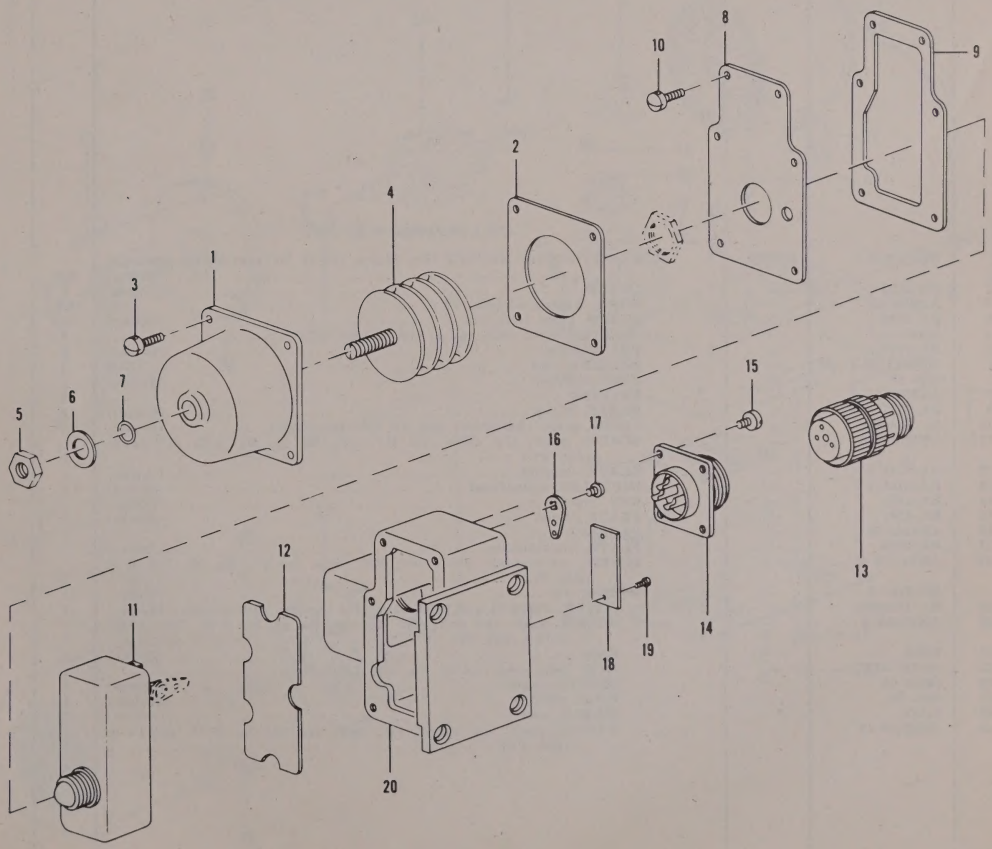

Figure 114. Absolute Pressure Switch

FIG. & INDEX NO.	PART NUMBER	REF SYMBOL	NOMENCLATURE 1 2 3 4 5 6 7	UNITS PER ASSY	APPLI-CATION
			ABSOLUTE PRESSURE SWITCH		
114–	RB–9635–4	S22001	. . ABSOLUTE PRESSURE SWITCH (See Figure 112–11 for next higher assembly) (Romec)	Ref	
–1	201–950	—	. . . COVER (Romec)	1	
–2	201–788	—	. . . GASKET (Romec)	1	
–3	AN500A6–7	—	. . . SCREW, mach: slot drive; Fil H; steel, cad pl; No. 6–32; 7/16 in lg (Att. Pt. for items 1 and 2)	4	
–4	201–948C	—	. . . BELLOWS (Romec)	1	
–5	AN316–4R	—	. . . NUT, check: steel, cad pl; 1/4 in–28; right hand thread (Att. Pt.)	1	
–6	202–168	—	. . . WASHER, flat (Att. Pt.) (Romec)	1	
–7	AN6227–5	—	. . . PACKING	1	
–8	202–066	—	. . . PLATE, spacer (Romec)	1	
–9	202–065	—	. . . GASKET (Romec)	1	
–10	AN500A6–5	—	. . . SCREW, mach: slot drive; Fil H; steel, cad pl; No. 6–32; 5/16 in lg (Att. Pt. for items 8 and 9)	2	
–11	201–786A	—	. . . SWITCH, sensitive (Romec)	1	
–12	202–108	—	. . . INSULATOR, plate (Romec)	1	
–13	AN3106–10SL3S	—	. . . CONNECTOR, plug	1	
–14	AN3102A–10SL3P	—	. . . CONNECTOR, receptacle	1	
–15	AN500A4–4	—	. . . SCREW, mach: slot drive; Fil H; steel, cad pl; No. 4/40; 1/4 in lg (Att. Pt.)	4	
–16	2102–04–00	—	. . . TERMINAL, lug (Shakeproof)	3	
–17	AN500B4–3	—	. . . SCREW, mach: slot drive; Fil H; brass; No. 4–40; 3/16 in lg (Att. Pt.)	1	
–18	201–949	—	. . . PLATE, identification (Romec)	1	
–19	AN535–00–2	—	. . . SCREW, self-tapping: slot drive; RH; steel, cad pl; No. 00; 1/8 in lg (Att. Pt.)	2	
–20	202–052A	—	. . . HOUSING (Romec)	1	
			AIR COMPRESSOR HD–70/U		
115–	RG–8160–3	B22001	. . AIR COMPRESSOR HD–70/U (See Figure 112–52 for next higher assembly) (Romec)	Ref	
–1	RB–8170	—	. . . COVER (Romec)	1	
–2	AN995C20	—	. . . WIRE, mechanical (Att. Pt.)	AR	
–3	RA–8179	—	. . . SCREW, mach (Att. Pt.) (Romec)	4	
–4	AN935–8	—	. . . WASHER, lock: steel, cad pl; No. 8 (Att. Pt.)	4	
–5	RA–8169	—	. . . PIN, locating (Romec)	2	
–6	77036X1EP–3	—	. . . BEARING, ball (ND)	1	
–7	5100–23	—	. . . RING, retainer (Waldes)	1	
–8	AN6227–25	—	. . . PACKING	1	
–9	RA–8167	—	. . . PLATE, thrust (Romec)	1	
–10	No Number	—	. . . LINER, pump (RB–8166–1 and RA–8168 assembled) (Romec)	1	
–11	AN500–8–14	—	. . . SCREW, mach: slot drive; Fil H; steel, cad pl; No. 8–32; 7/8 in lg (Att. Pt.)	2	
–12	RA–8164–1	—	. . . BLADE, impeller (Romec)	4	
–13	RA–8163–1	—	. . . IMPELLER, centrifugal (Romec)	1	
–14	RA–8171	—	. . . KEY, mach (Romec)	1	
–15	RA–8167	—	. . . PLATE, thrust (Romec)	1	
–16	AN6227–25	—	. . . PACKING	1	
–17	RA–5575	—	. . . PLATE, identification (Romec)	1	
–18	AN535–00–2	—	. . . SCREW, self-tapping: slot drive; RH; steel, cad pl; No. 00; 1/8 in lg (Att. Pt.)	2	
	RD–8161–2	—	. . . MOTOR, AC (Romec)	1	
–19	No Number	—	. . . . COVER (79739–03 and 79745–03 riveted together with 4 rivets) (Romec)	1	
–20	AN500A6–3	—	. . . . SCREW, mach: slot drive; Fil H; steel, cad pl; No. 6–32; 3/16 in lg; drilled (Att. Pt.)	6	
–21	78470	—	. . . . FAN (Romec)	1	
–22	AN365–832	—	. . . . NUT, lock: steel, cad pl; No. 8–32 (Att. Pt.)	1	
–23	36412–68	—	. . . . SLEEVE, spacer (Romec)	1	
–24	5001–86	—	. . . . RING, retainer (Waldes)	1	
–25	81562	—	. . . . SHIELD, end (Romec)	1	
–26	AN505–6–12	—	. . . . SCREW, mach: slot drive; FH; steel, cad pl; No. 6–32; 3/4 in lg (Att. Pt.)	3	

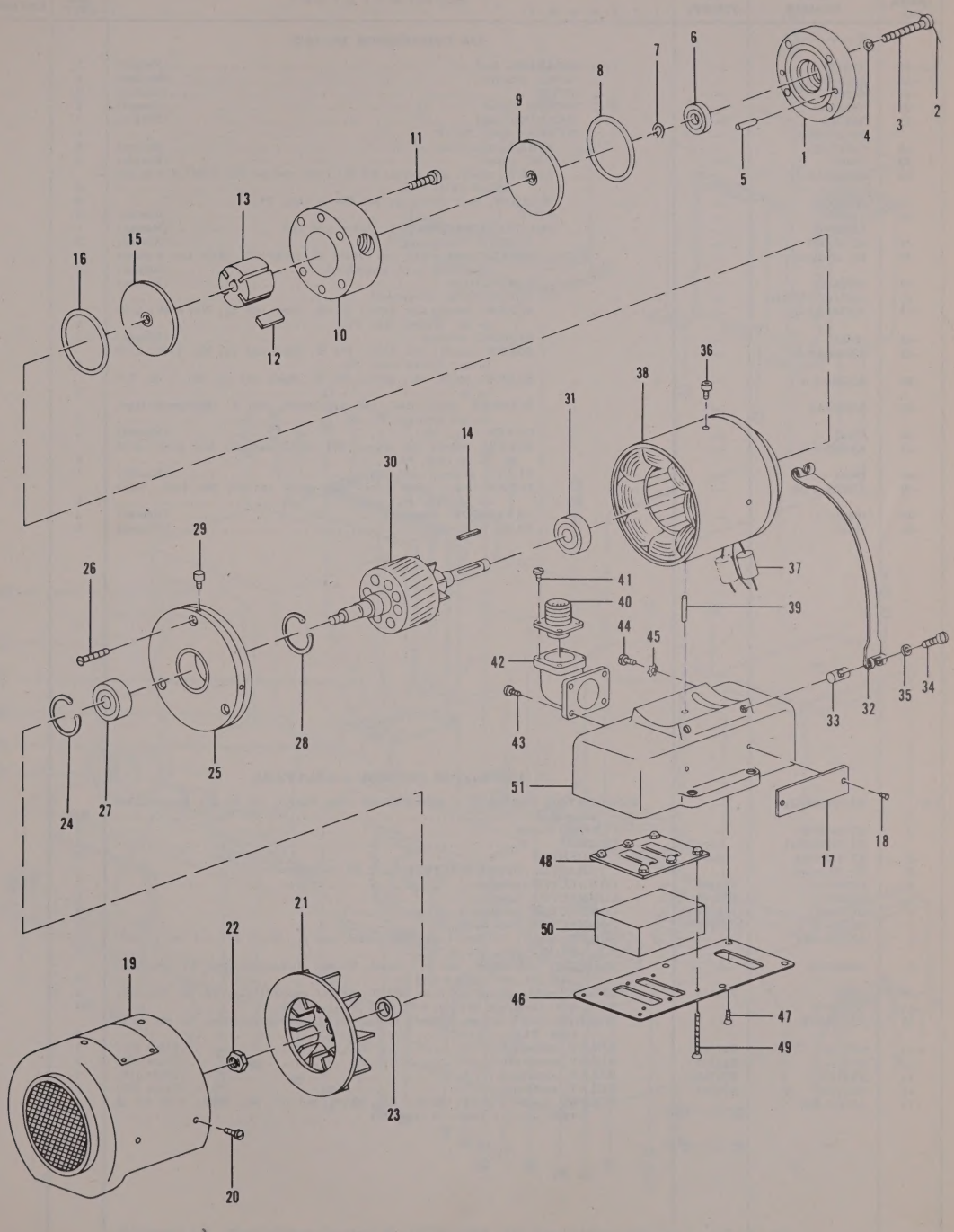

Figure 115. Air Compressor HD–70/U

FIG. & INDEX NO.	PART NUMBER	REF SYMBOL	NOMENCLATURE 1 2 3 4 5 6 7	UNITS PER ASSY	APPLI-CATION
			AIR COMPRESSOR HD–70/U		
115–27	37KDD	—	. . . . BEARING, ball ....(Fafnir)	1	
–28	5000–86	—	. . . . RING, retainer ....(Waldes)	1	
–29	81557	—	. . . . STUD ....(Romec)	3	
–30	79344–01–1	—	. . . . ROTOR, motor ....(Romec)	1	
–31	39KDD	—	. . . . BEARING, ball ....(Fafnir)	1	
	No Number	—	. . . . STATOR AND BASE	1	
–32	78147–03	—	. . . . . STRAP, mounting ....(Romec)	2	
–33	79400	—	. . . . . PIN, dowel ....(Romec)	4	
–34	AN500A8–12	—	. . . . . SCREW, mach: slot drive; Fil H; steel, cad pl; No. 8–32; 3/4 in lg; drilled (Att. Pt.)	4	
–35	AN960–8	—	. . . . . WASHER, flat: steel, cad pl; No. 8 (Att. Pt.)	4	
–36	81557	—	. . . . . STUD ....(Romec)	3	
	84598–02	—	. . . . . SHIELD SUBASSEMBLY, stator and end ....(Romec)	1	
–37	36198–107	—	. . . . . SLEEVE, insulating ....(Romec)	2	
–38	No Number	—	. . . . . SHIELD, stator and end (79404–02, 24035–122, 79178 and 8 pieces of AN505–6–14, assembled) ....(Romec)	1	
–39	29828–22	—	. . . . . PIN, locating ....(Romec)	1	
–40	AN3102–10SL4P	—	. . . . . CONNECTOR, receptacle	1	
–41	AN500A4–5	—	. . . . . SCREW, mach: slot drive; Fil H; steel, cad pl; No. 4–40; 5/16 in lg; drilled (Att. Pt.)	4	
–42	77666	—	. . . . . FITTING, conduit ....(Romec)	1	
–43	AN500A4–5	—	. . . . . SCREW, mach: slot drive; Fil H; steel, cad pl; No. 4–40; 5/16 in lg; drilled (Att. Pt.)	4	
–44	AN500–8–6	—	. . . . . SCREW, mach: slot drive; Fil H; steel, cad pl; No. 8–32; 3/8 in lg	1	
–45	AN936A8	—	. . . . . WASHER, lock: steel, cad pl; round, No. 8; shakeproof-type, tw int teeth	1	
–46	81545	—	. . . . . COVER ....(Romec)	1	
–47	AN505–4–5	—	. . . . . SCREW, mach: slot drive; FH; steel, cad pl; No. 4–40; 5/16 in lg (Att. Pt.)	6	
–48	79681	—	. . . . . PLATE, anchor (Att. Pt.) ....(Romec)	1	
–49	AN505–4–20	—	. . . . . SCREW, mach: slot drive; FH; steel, cad pl; No. 4–40; 1-1/4 in lg (Att. Pt.)	6	
–50	79661–11	—	. . . . . CAPACITOR, fixed ....(Romec)	1	
–51	81543	—	. . . . . BASE ....(Romec)	1	
			MODULATOR CONTROL C–1036/CPS–6B		
116–	ML7603849G1	—	. MODULATOR CONTROL C–1036/CPS–6B (See Figure 101–62 for next higher assembly)	Ref	
–1	K7126123P1	—	. . SCREW, thumb	3	
	ML7603863G1	—	. . CHASSIS	1	
–2	K7128235P5	—	. . . BUSHING	3	
–3	No Number	—	. . . CHASSIS (D7603863P2, P6, P7 and P8, assembled)	1	
–4	UG306/U	E21103	. . CONNECTOR, adapter	1	
–5	UG306/U	E21108	. . CONNECTOR, adapter	1	
–6	UG290/U	J21108	. . CONNECTOR, receptacle	1	
–7	UG290/U	J21103	. . CONNECTOR, receptacle	1	
–8	AN520–3R4	—	. . SCREW, mach: Phillips drive; RH; steel, cad pl; No. 3–56; 1/4 in lg (Att. Pt. for items 6 and 7)	8	
–9	AN936A3	—	. . WASHER, lock: steel, cad pl; round, No. 3; shakeproof-type, tw int teeth (Att. Pt. for items 6 and 7)	8	
–10	D6493	E21101	. . RELAY, motor driven (Includes B21101, S21101 and S21102)..(A. W. Haydon)	1	
–11	AN340–8	—	. . NUT, hex: steel, cad pl; No. 8–32 (Att. Pt.)	4	
–12	AN936B8B	—	. . WASHER, lock: bronze, tinned; round, No. 8, shakeproof-type, tw ext teeth (Att. Pt.)	4	
–13	SG8046	K21101	. . RELAY, armature ....(Clare CP)	1	
–14	SG8045	K21102	. . RELAY, armature ....(Clare CP)	1	
–15	SK11007	K21103	. . RELAY, armature ....(Clare CP)	1	
–16	SK11007	K21104	. . RELAY, armature ....(Clare CP)	1	
–17	AN515–6R5	—	. . SCREW, mach: Phillips drive; RH; steel, cad pl; No. 6–32; 5/16 in lg (Att. Pt. for items 13 thru 16)	16	

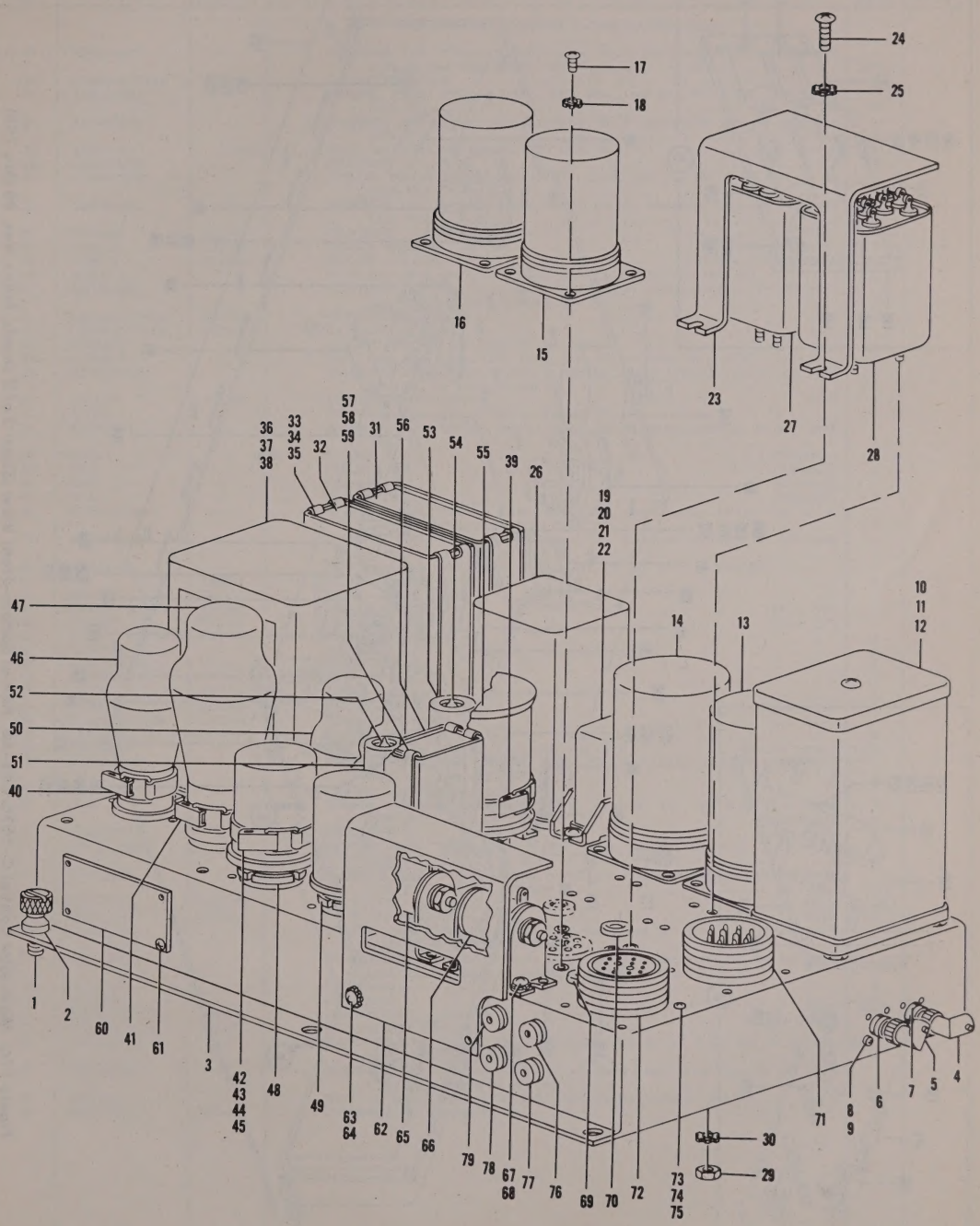

Figure 116. Modulator Control C–1036/CPS–6B, Front View (Sheet 1 of 2 sheets, Index Nos. 1 thru 79)

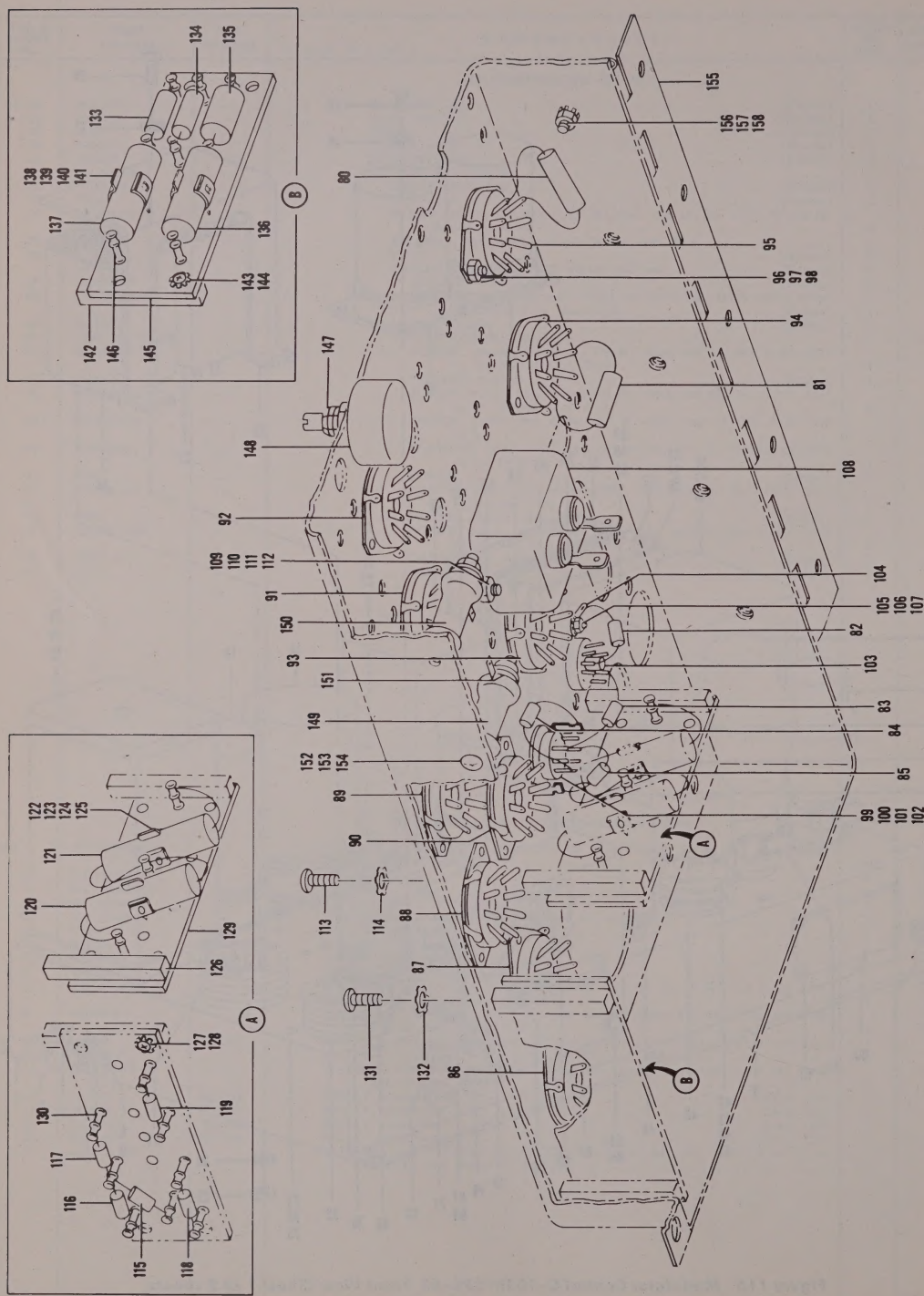

Figure 116. Modulator Control C–1036/CPS–6B, Partial Bottom–Front View (Sheet 2 of 2 sheets, Index Nos. 80 thru 158)

FIG. & INDEX NO.	PART NUMBER	REF SYMBOL	NOMENCLATURE 1 2 3 4 5 6 7	UNITS PER ASSY	APPLI-CATION
			MODULATOR CONTROL C–1036/CPS–6B (Cont)		
116–18	AN936B6B	—	. . WASHER, lock: bronze, tinned; round, No. 8, shakeproof-type, tw ext teeth (Att. Pt. for items 13 thru 16)	16	
–19	CP65B1FE105K	C21106	. . CAPACITOR, fixed	1	
–20	AN515–8R5	—	. . SCREW, mach: Phillips drive; RH; steel, cad pl; No. 8–32; 5/16 in lg (Att. Pt.)	2	
–21	AN936B8B	—	. . WASHER, lock: bronze, tinned; round, No. 8; shakeproof-type, tw ext teeth (Att. Pt.)	2	
–22	AN340–8	—	. . NUT, hex: steel, cad pl; No. 8–32 (Att. Pt.)	2	
–23	B7410572P1	—	. . BRACKET	1	
–24	AN515–8R10	—	. . SCREW, mach: Phillips drive; RH; steel, cad pl; No. 8–32; 5/8 in lg (Att. Pt.)	2	
–25	AN936B8B	—	. . WASHER, lock: bronze, tinned; round, No. 8; shakeproof-type, tw ext teeth (Att. Pt.)	2	
–26	7481554	L21101	. . REACTOR (GE)	1	
–27	20389–8	K21105	. . RELAY, armature (Phillips Control Corp)	1	
–28	20389–8	K21106	. . RELAY, armature (Phillips Control Corp)	1	
–29	AN340–6	—	. . NUT, hex: steel, cad pl; No. 6–32 (Att. Pt. for items 26 thru 28)	12	
–30	AN936B6B	—	. . WASHER, lock: bronze, tinned; round, No. 6; shakeproof-type, tw ext teeth (Att. Pt. for items 26 thru 28)	12	
–31	CP70B1FF106K	C21102	. . CAPACITOR, fixed	1	
–32	CP70B1FF106K	C21103	. . CAPACITOR, fixed	1	
–33	CP07SC4	—	. . CLAMP (Att. Pt. for items 31 and 32)	4	
–34	AN345–10	—	. . NUT, hex: steel, cad pl; No. 10–32 (Att. Pt. for items 31 and 32)	4	
–35	AN936B10B	—	. . WASHER, lock: bronze, tinned; round, No. 10; shakeproof-type, tw ext teeth (Att. Pt. for items 31 and 32)	4	
–36	7481553	T21101	. . TRANSFORMER, power (GE)	1	
–37	AN340–8	—	. . NUT, hex: steel, cad pl; No. 8–32 (Att. Pt.)	4	
–38	AN936B8B	—	. . WASHER, lock: bronze, tinned; round, No. 8, shakeproof-type, tw ext teeth (Att. Pt.)	4	
–39	926G–1	—	. . CLAMP (Birtcher)	1	
–40	926A	—	. . CLAMP (Birtcher)	2	
–41	926C	—	. . CLAMP (Birtcher)	1	
–42	926D	—	. . CLAMP (Birtcher)	2	
–43	AN520–10R5	—	. . SCREW, mach: Phillips drive; RH; steel, cad pl; No. 10–32; 5/16 in lg (Att. Pt. for items 39 thru 42)	7	
–44	AN936B10B	—	. . WASHER, lock: bronze, tinned; round, No. 10; shakeproof-type, tw ext teeth (Att. Pt. for items 39 thru 42)	7	
–45	AN345–10	—	. . NUT, hex: steel, cad pl; No. 10–32 (Att. Pt. for items 39 thru 42)	7	
–46	0D3	V21104	. . TUBE, electron	1	
–47	5R4GY	V21103	. . TUBE, electron	1	
–48	SK5123	K21108	. . RELAY, armature (Clare CP)	1	
–49	SK5123	K21109	. . RELAY, armature (Clare CP)	1	
–50	0D3	V21105	. . TUBE, electron	1	
–51	TSF0T101	—	. . SHIELD, tube	1	
–52	5726/6AL5W	V21101	. . TUBE, electron	1	
–53	TS103P01	—	. . SHIELD, tube	1	
–54	12AU7	V21102	. . TUBE, electron	1	
–55	B0HX–26	K21107	. . RELAY, armature (Allied Cont)	1	
–56	CP70B1FF205K	C21109	. . CAPACITOR, fixed	1	
–57	CP07SA3	—	. . CLAMP (Att. Pt.)	2	
–58	AN345–10	—	. . NUT, hex: steel, cad pl; No. 10–32 (Att. Pt.)	2	
–59	AN936B10B	—	. . WASHER, lock: bronze, tinned; round, No. 10; shakeproof-type, tw ext teeth (Att. Pt.)	2	
–60	NP157561C	—	. . PLATE, identification	1	
–61	Coml	—	. . SCREW, self-tapping: Phillips drive; Bind H; SS; No. 4–40; 1/4 in lg (Att. Pt.) (Shakeproof)	4	
–62	A7020446P1	—	. . BRACKET	1	
–63	AN515–8R5	—	. . SCREW, mach: Phillips drive; RH; steel, cad pl; No. 8–32; 5/16 in lg (Att. Pt.)	2	
–64	AN936B8B	—	. . WASHER, lock: bronze, tinned; round, No. 8; shakeproof-type, tw ext teeth (Att. Pt.)	2	
–65	6RS5FB40	CR21102	. . RECTIFIER, metallic (GE)	1	
–66	6RS5FB40	CR21101	. . RECTIFIER, metallic (GE)	1	
–67	AN515–4R5	—	. . SCREW, mach: Phillips drive; RH; steel, cad pl; No. 4–40; 5/16 in lg (Att. Pt. for items 65 and 66)	8	
–68	AN936B4B	—	. . WASHER, lock: bronze, tinned; round, No. 8; shakeproof-type, tw ext teeth (Att. Pt. for items 65 and 66)	8	
–69	B2R53P3	—	. . GROMMET	1	
–70	B2R53P5	—	. . GROMMET	2	
–71	AN3102–28–2P	J21101	. . CONNECTOR, receptacle	1	
–72	AN3102–28–2S	J21102	. . CONNECTOR, receptacle	1	
–73	AN515–6R6	—	. . SCREW, mach: Phillips drive; RH; steel, cad pl; No. 6–32; 3/8 in lg (Att. Pt. for items 71 and 72)	8	
–74	AN936B6B	—	. . WASHER, lock: bronze, tinned; round, No. 6; shakeproof-type, tw ext teeth (Att. Pt. for items 71 and 72)	8	
–75	AN340–6	—	. . NUT, hex: steel, cad pl; No. 6–32 (Att. Pt. for items 71 and 72)	8	
–76	K7108488P1	J21104	. . CONNECTOR, receptacle	1	

FIG. & INDEX NO.	PART NUMBER	REF SYMBOL	NOMENCLATURE 1 2 3 4 5 6 7	UNITS PER ASSY	APPLI-CATION
			MODULATOR CONTROL C–1036/CPS–6B (Cont)		
116–77	K7108488P1	J21105	. . CONNECTOR, receptacle	1	
–78	K7108488P1	J21106	. . CONNECTOR, receptacle	1	
–79	K7108488P1	J21107	. . CONNECTOR, receptacle	1	
–80	RU4C102K	R21101	. . RESISTOR, fixed	1	
–81	RU4B2R2K	R21102	. . RESISTOR, fixed	1	
–82	RC20BF105J	R21106	. . RESISTOR, fixed	1	
–83	RC20BF105J	R21105	. . RESISTOR, fixed	1	
–84	RC20BF680K	R21103	. . RESISTOR, fixed	1	
–85	RC20BF105J	R21104	. . RESISTOR, fixed	1	
–86	TSB8T101	XV21104	. . SOCKET, tube	1	
–87	TSB8T101	XV21103	. . SOCKET, tube	1	
–88	TSB8T101	XK21108	. . SOCKET, tube	1	
–89	TSB8T101	XK21109	. . SOCKET, tube	1	
–90	TSB8T101	XV21105	. . SOCKET, tube	1	
–91	TSB8T101	XK21104	. . SOCKET, tube	1	
–92	TSB8T101	XK21103	. . SOCKET, tube	1	
–93	TSB8T101	XK21107	. . SOCKET, tube	1	
–94	TSB8T101	XK21101	. . SOCKET, tube	1	
–95	TSB8T101	XK21102	. . SOCKET, tube	1	
–96	AN515–6R5	—	. . SCREW, mach: Phillips drive; RH; steel, cad pl; No. 6–32; 5/16 in lg (Att. Pt. for items 86 thru 95)	20	
–97	AN936B6B	—	. . WASHER, lock: bronze, tinned; round, No. 6; shakeproof-type, tw ext teeth (Att. Pt. for items 86 thru 95)	20	
–98	AN340–6	—	. . NUT, hex: steel, cad pl; No. 8–32 (Att. Pt. for items 86 thru 95)	20	
–99	TS102C01	XV21101	. . SOCKET, tube	1	
–100	AN515–4R4	—	. . SCREW, mach: Phillips drive; RH; steel, cad pl; No. 4–40; 1/4 in lg (Att. Pt.)	2	
–101	AN936B4B	—	. . WASHER, lock: bronze, tinned; round, No. 4; shakeproof-type, tw ext teeth (Att. Pt.)	2	
–102	1060	—	. . NUT, anchor (Att. Pt.) (Cinch)	1	
–103	TS103P01	XV21102	. . SOCKET, tube	1	
–104	K7878455P1	—	. . TERMINAL, lug	1	
–105	AN515–4R5	—	. . SCREW, mach: Phillips drive; RH; steel, cad pl; No. 4–40; 5/16 in lg (Att. Pt. for items 103 and 104)	2	
–106	AN936B4B	—	. . WASHER, lock: bronze, tinned; round, No. 4; shakeproof-type, tw ext teeth (Att. Pt. for items 103 and 104)	2	
–107	AN340–4	—	. . NUT, hex: steel, cad pl; No. 4–40 (Att. Pt. for items 103 and 104)	2	
–108	CP54B6FF504V	C21101	. . CAPACITOR, fixed	1	
–109	AN515–6R7	—	. . SCREW, mach: Phillips drive; RH; steel, cad pl; No. 6–32; 7/16 in lg (Att. Pt.)	2	
–110	1205	—	. . BUSHING (Att. Pt.) (Amer Rad Hdwe)	4	
–111	AN936B6B	—	. . WASHER, lock: bronze, tinned; round, No. 6; shakeproof-type, tw ext teeth (Att. Pt.)	2	
–112	AN340–6	—	. . NUT, hex: steel, cad pl; No. 6–32 (Att. Pt.)	2	
	ML7012382G1	—	. . CAPACITOR-RESISTOR ASSEMBLY	1	
–113	AN515–8R7	—	. . SCREW, mach: Phillips drive; RH; steel, cad pl; No. 8–32; 7/16 in lg (Att. Pt.)	2	
–114	AN936B8B	—	. . WASHER, lock: bronze, tinned; round, No. 8; shakeproof-type, tw ext teeth (Att. Pt.)	2	
–115	RC20BF681J	R21107	. . . RESISTOR, fixed	1	
–116	RC20BF681J	R21108	. . . RESISTOR, fixed	1	
–117	RC20BF104K	R21109	. . . RESISTOR, fixed	1	
–118	RC20BF104K	R21110	. . . RESISTOR, fixed	1	
–119	RC20BF225K	R21112	. . . RESISTOR, fixed	1	
–120	CP26A1EF103V	C21107	. . . CAPACITOR, fixed	1	
–121	CP26A1EF103V	C21108	. . . CAPACITOR, fixed	1	
	ML7012380G1	—	. . . BOARD, terminal	1	
–122	500–500	—	. . . . CLIP (Prestole Corp)	2	
–123	AN515–4R5	—	. . . . SCREW, mach: Phillips drive; RH; steel, cad pl; No. 4–40; 5/16 in lg (Att. Pt.)	2	
–124	AN936B6B	—	. . . . WASHER, lock: bronze, tinned; round, No. 4; shakeproof-type, tw ext teeth (Att. Pt.)	2	
–125	AN340–6	—	. . . . NUT, hex: steel, cad pl; No. 4–40 (Att. Pt.)	2	
–126	K7126106P14	—	. . . . POST, supporting	2	
–127	AN515–8R7	—	. . . . SCREW, mach: Phillips drive; RH; steel, cad pl; No. 8–32; 7/16 in lg (Att. Pt.)	4	
–128	AN936B6B	—	. . . . WASHER, lock: bronze, tinned; round, No. 8; shakeproof-type, tw ext teeth (Att. Pt.)	4	
–129	A7012378P1	—	. . . . PANEL	1	
–130	M7475333P3	—	. . . . TERMINAL, stud	11	
	ML7012383G1	—	. . CAPACITOR-RESISTOR ASSEMBLY	1	
–131	AN515–8R7	—	. . SCREW, mach: Phillips drive; RH; steel, cad pl; No. 8–32; 7/16 in lg (Att. Pt.)	2	
–132	AN936B8B	—	. . WASHER, lock: bronze, tinned; round, No. 8; shakeproof-type, tw ext teeth (Att. Pt.)	2	
–133	RC42BF332J	R21113	. . . RESISTOR, fixed	1	
–134	RC42BF332J	R21114	. . . RESISTOR, fixed	1	

FIG. & INDEX NO.	PART NUMBER	REF SYMBOL	NOMENCLATURE 1 2 3 4 5 6 7	UNITS PER ASSY	APPLI-CATION
			MODULATOR CONTROL C–1036/CPS–6B (Cont)		
116–135	RC42BF222J	R21115	. . . RESISTOR, fixed	1	
–136	CP26A1EF103V	C21105	. . . CAPACITOR, fixed	1	
–137	CP26A1EF103V	C21104	. . . CAPACITOR, fixed	1	
	ML7012381G1	—	. . . BOARD, terminal	1	
–138	500–500	—	. . . . CLIP (Prestole Corp)	2	
–139	AN515–4R5	—	. . . . SCREW, mach: Phillips drive; RH; steel, cad pl; No. 4–40; 5/16 in lg (Att. Pt.)	2	
–140	AN936B4B	—	. . . . WASHER, lock: bronze, tinned; round, No. 4; shakeproof-type, tw ext teeth (Att. Pt.)	2	
–141	AN340–4	—	. . . . NUT, hex: steel, cad pl; No. 4–40 (Att. Pt.)	2	
–142	K7126106P14	—	. . . . POST, supporting	2	
–143	AN515–8R7	—	. . . . SCREW, mach: Phillips drive; RH; steel, cad pl; No. 8–32; 7/16 in lg (Att. Pt.)	4	
–144	AN936B8B	—	. . . . WASHER, lock: bronze, tinned; round, No. 8; shakeproof-type, tw ext teeth (Att. Pt.)	4	
–145	A7012379P1	—	. . . . PANEL	1	
–146	M7475333P3	—	. . . . TERMINAL, stud	8	
–147	10061	—	. . COLLET (Millen)	1	
–148	RA20A2SD8R0AK	R21118	. . RESISTOR, variable	1	
–149	RW31G401	R21119	. . RESISTOR, fixed	1	
–150	RW31G401	R21111	. . RESISTOR, fixed	1	
–151	K7874555P17	—	. . WASHER, flat	4	
–152	AN515–8R32	—	. . SCREW, mach: Phillips drive; RH; steel, cad pl; No. 8–32; 2 in lg (Att. Pt. for items 149, 150 and 151)	2	
–153	Coml	—	. . WASHER, flat: brass, cad pl; round, 0.188 in ID, 0.500 in OD, 0.040 in thk (Att. Pt. for items 149, 150 and 151) (Wrought Washer)	4	
–154	K7861714P4	—	. . NUT, lock (Att. Pt. for items 149, 150 and 151)	2	
–155	SS–975A	—	. . HINGE (Bronson HD)	1	
–156	AN515–8R5	—	. . SCREW, mach: Phillips drive; RH; steel, cad pl; No. 8–32; 5/16 in lg (Att. Pt.)	5	
–157	AN936B8B	—	. . WASHER, lock: bronze, tinned; round, No. 8; shakeproof-type, tw ext teeth (Att. Pt.)	5	
–158	AN340–8	—	. . NUT, hex: steel, cad pl; No. 8–32 (Att. Pt.)	5	

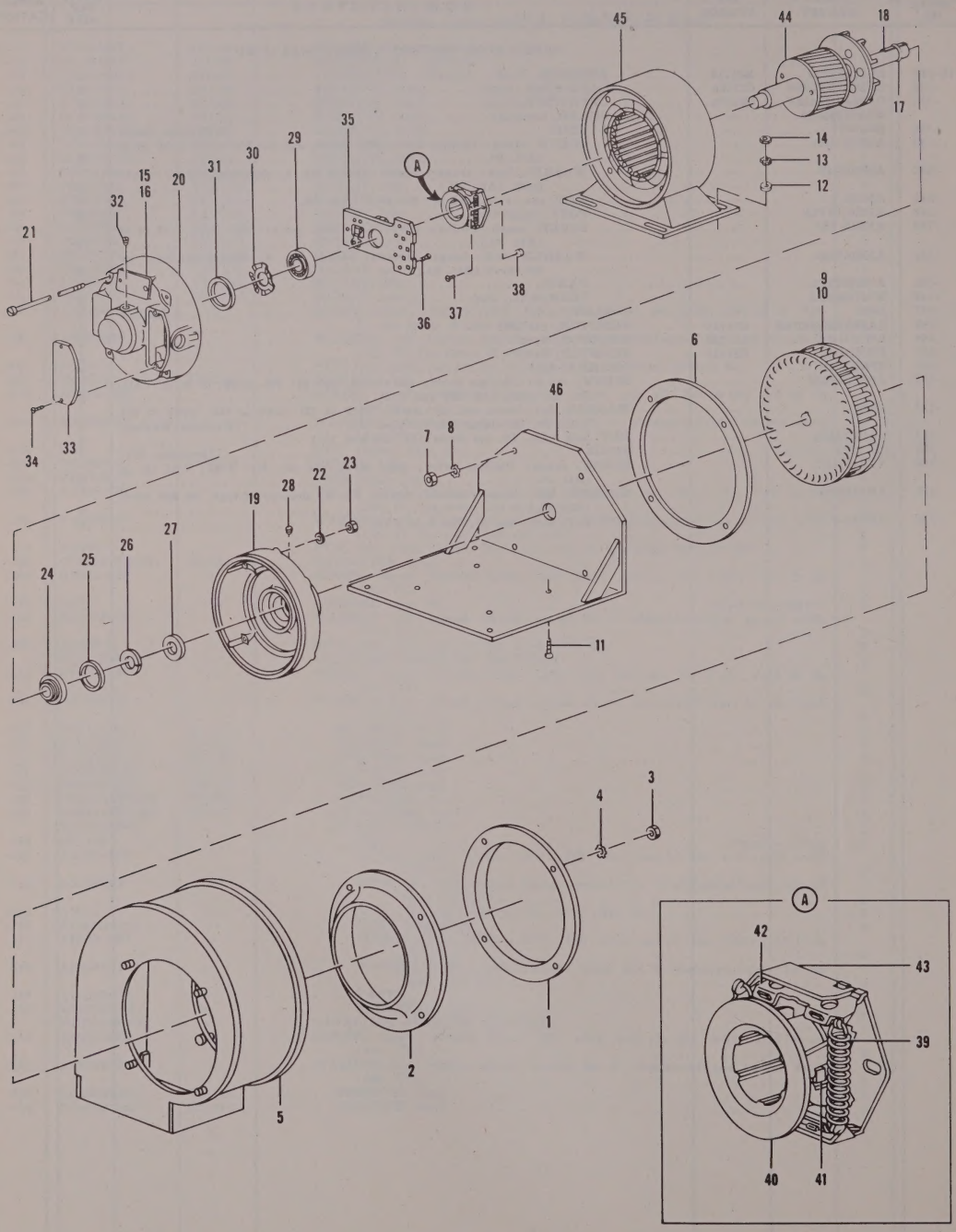

Figure 117. Blower

FIG. & INDEX NO.	PART NUMBER	REF SYMBOL	NOMENCLATURE 1 2 3 4 5 6 7	UNITS PER ASSY	APPLI-CATION
			BLOWER		
117–	B7411339P1	B21001	. BLOWER (See Figure 101–71 for next higher assembly)	Ref	
–1	26P87	—	. . FITTING, duct (Amer Blower)	1	
–2	26P86	—	. . FITTING, duct (Amer Blower)	1	
–3	AN340–416	—	. . NUT, hex: steel, cad pl; 1/4 in–20 (Att. Pt. for items 1 and 2)	4	
–4	AN936B416	—	. . WASHER, lock: steel, cad pl; round, 1/4 in; shakeproof-type, tw ext teeth (Att. Pt. for items 1 and 2)	4	
–5	56–SA–85	—	. . HOUSING (Amer Blower)	1	
–6	H101631P8	—	. . GASKET (Amer Blower)	1	
–7	AN340–416	—	. . NUT, hex: steel, cad pl; 1/4 in–20 (Att. Pt. for items 5 and 6)	4	
–8	AN936B416	—	. . WASHER, lock: steel, cad pl; round, 1/4 in; shakeproof-type, tw ext teeth (Att. Pt. for items 5 and 6)	4	
–9	No Number	—	. . IMPELLER, centrifugal (57–SA–723 and 57–P–274 riveted together with 9 rivets) (Amer Blower)	1	
–10	Coml	—	. . SCREW, set: Allen drive; headless; steel, cad pl; 3/8 in–16; 1/4 in lg; cup point (Att. Pt.) (Allen Mfg)	2	
	5K65EC140	—	. . MOTOR, AC	1	
–11	AN505–616–16	—	. . SCREW, mach: slot drive; FH; steel, cad pl; 3/8 in–16; 1 in lg (Att. Pt.)	4	
–12	AN960–616	—	. . WASHER, flat: steel, cad pl; 3/8 in (Att. Pt.)	4	
–13	AN936B616	—	. . WASHER, lock: steel, cad pl; round, 3/8 in; shakeproof-type, tw ext teeth (Att. Pt.)	4	
–14	AN340–616	—	. . NUT, hex: steel, cad pl; 3/8 in–16 (Att. Pt.)	4	
–15	NP58914	—	. . . PLATE, identification (GE)	1	
–16	K5828716AAP2	—	. . . PIN, escutcheon (Att. Pt.) (GE)	2	
–17	K5826927AA	—	. . . RING, retainer (GE)	1	
–18	K5826928AAP18	—	. . . KEY (GE)	1	
–19	P4265888LAP3	—	. . . SHIELD, end (GE)	1	
–20	P8111235BGP2	—	. . . SHIELD, end (GE)	1	
–21	K8124216ABP48	—	. . . SCREW, mach (Att. Pt. for items 19 and 20) (GE)	4	
–22	K5859370AAP10	—	. . . WASHER, flat (Att. Pt. for items 19 and 20) (GE)	4	
–23	AN340–416	—	. . . NUT, hex: steel, cad pl; 1/4 in–20 (Att. Pt. for items 19 and 20)	4	
	K8138268AGG7	—	. . . SHIELD SUBASSEMBLY, end (GE)	1	
–24	K5855279ACP5	—	. . . . BEARING, ball (GE)	1	
–25	K5855415AA	—	. . . . SHIM (GE)	AR	
–26	K5855416AAP1	—	. . . . WASHER, "C" (GE)	1	
–27	K5859706AAP1	—	. . . . PACKING (GE)	1	
–28	K8104500AAP1	—	. . . . PLUG, mach (GE)	1	
	K8138269ABG11	—	. . . SHIELD SUBASSEMBLY, end (GE)	1	
–29	K5855279ACP5	—	. . . . BEARING, ball (GE)	1	
–30	K5859944AAP1	—	. . . . WASHER, spring (GE)	1	
–31	K5855415AA	—	. . . . SHIM (GE)	AR	
–32	K8104500AAP1	—	. . . . PLUG, mach (GE)	1	
–33	K8109375AAP1	—	. . . . COVER (GE)	1	
–34	AN515–6–4	—	. . . . SCREW, mach: slot drive; RH; steel, cad pl; No. 6–32; 1/4 in lg (Att. Pt.)	2	
–35	K8160261AAG4	—	. . . SWITCH, centrifugal	1	
–36	AN504–6–6	—	. . . SCREW, self-tapping: slot drive; RH; steel, cad pl; No. 6–32; 1/4 in lg (Att. Pt.)	3	
	K8705461AAG1	—	. . . MECHANISM, centrifugal switch (GE)	1	
–37	AN520–6–7	—	. . . SCREW, mach: slot drive; RH; steel, cad pl; No. 6–32; 7/16 in lg (Att. Pt.)	2	
–38	K5828825AAP11	—	. . . WASHER, flat (GE)	2	
–39	K8705493AA	—	. . . . SPRING (GE)	2	
–40	M8144066AAP1	—	. . . . COLLAR, shaft (GE)	1	
–41	M8144069AAP2	—	. . . . WEIGHT, governor (GE)	2	
–42	M8144068AAP2	—	. . . . PIVOT (GE)	2	
–43	M8144067AAP1	—	. . . . PLATE, back (GE)	1	
–44	No Number	—	. . . ROTOR, motor (K5859761AAG6 and K8719337CP2 assembled) (GE)	1	
–45	No Number	—	. . . STATOR, motor (K8719915APG1 and K8719992AAG43 assembled) (GE)	1	
–46	H101631P7	—	. . BRACKET (Amer Blower)	1	

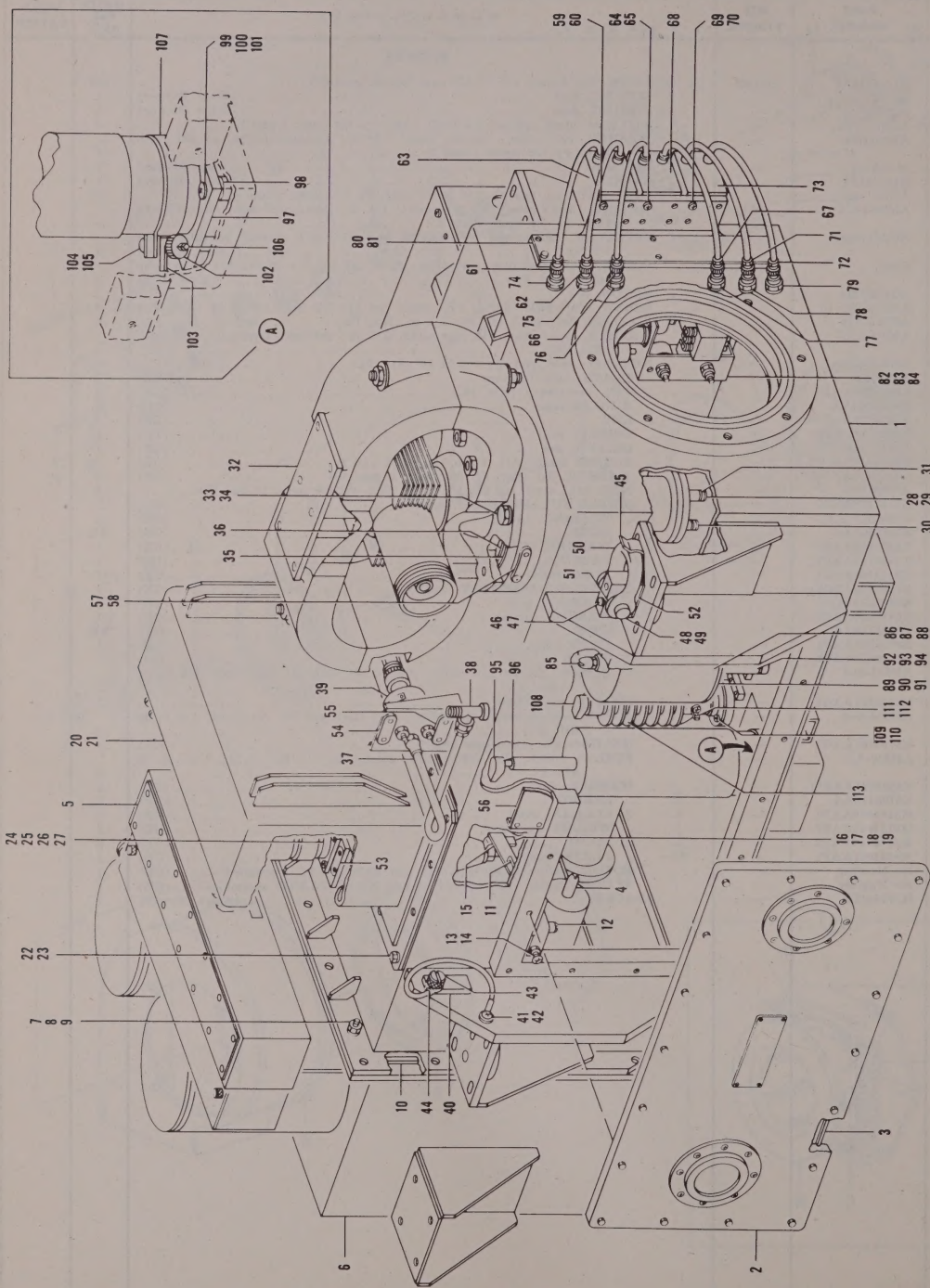

Figure 118. Radar Transmitter T–332/CPS–6B, Front View (Sheet 1 of 3 sheets, Index Nos. 1 thru 113)

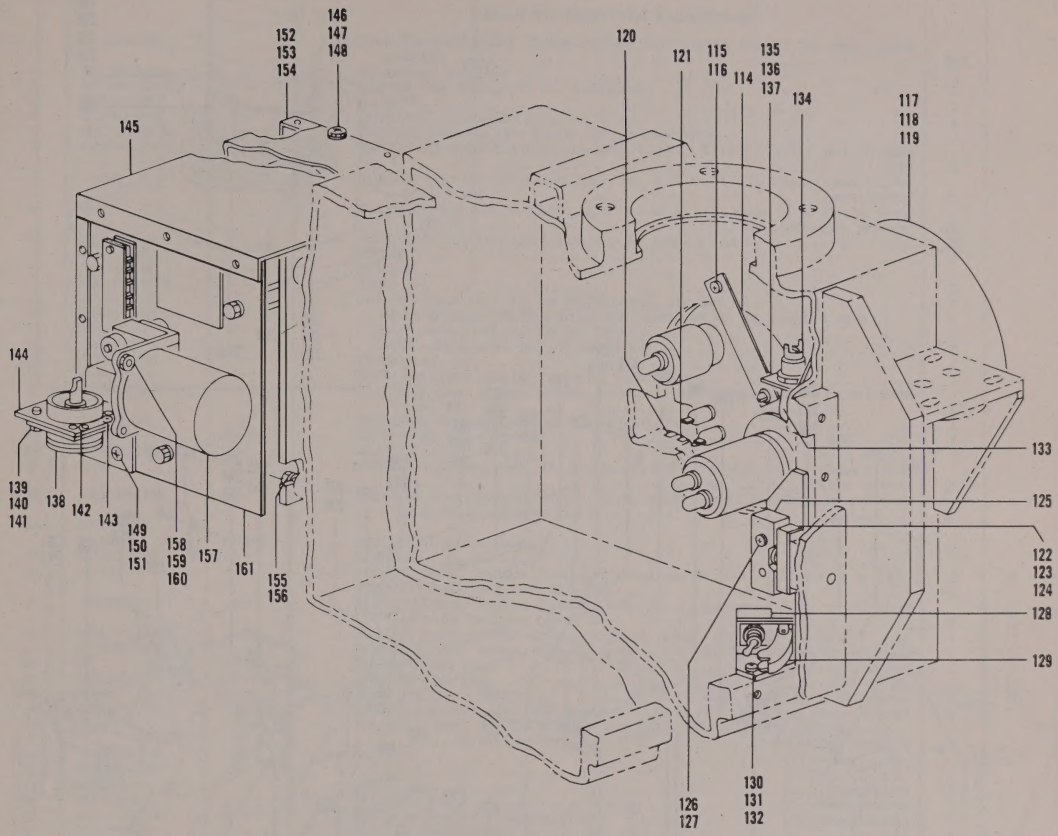

Figure 118. Radar Transmitter T–332/CPS–6B, Partial Front View (Sheet 2 of 3 sheets, Index Nos. 114 thru 161)

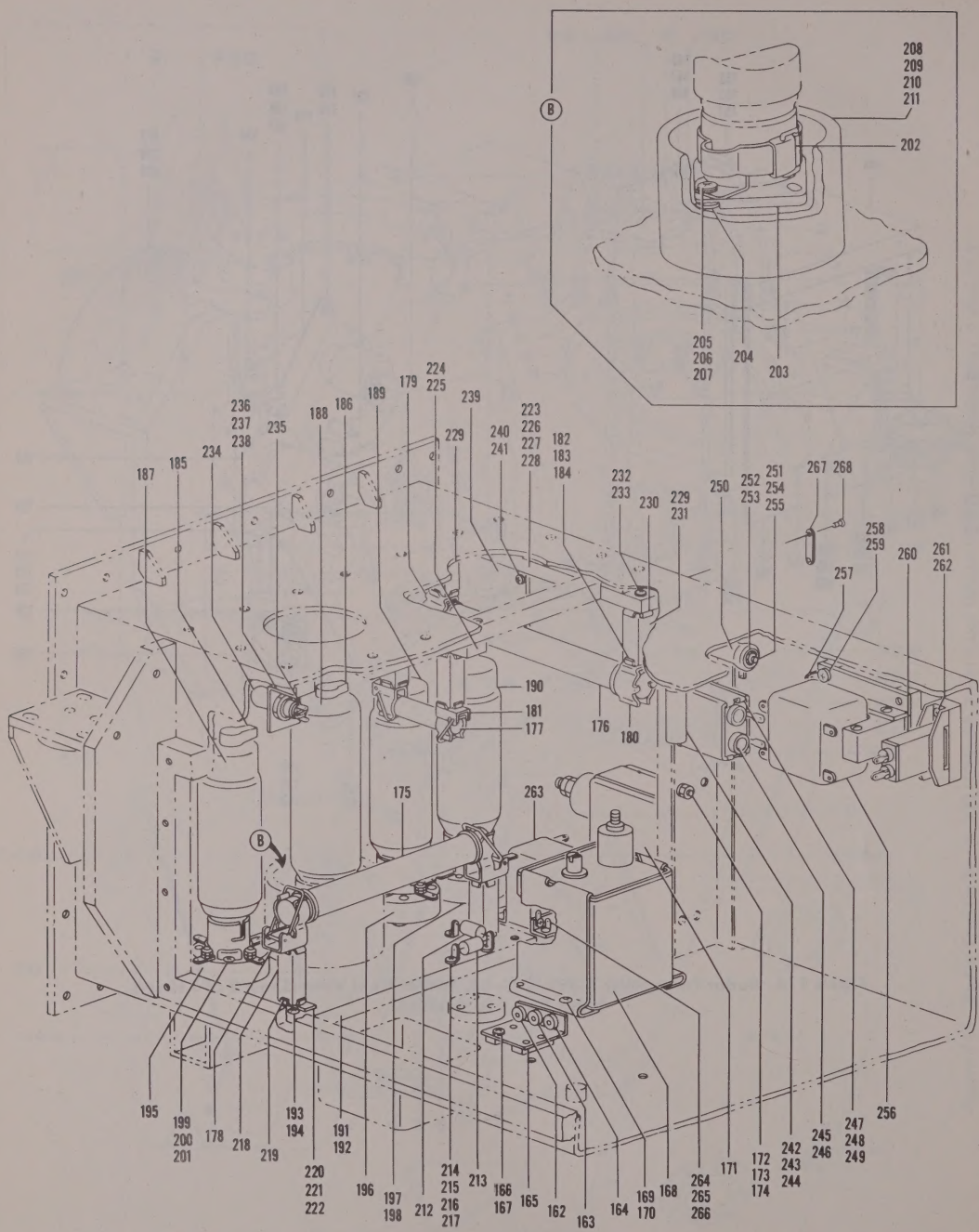

Figure 118. Radar Transmitter T–332/CPS–6B, Partial Front View (Sheet 3 of 3 sheets, Index Nos. 162 thru 268)

FIG. & INDEX NO.	PART NUMBER	REF SYMBOL	NOMENCLATURE 1 2 3 4 5 6 7	UNITS PER ASSY	APPLI-CATION
			RADAR TRANSMITTER T–332/CPS–6B		
118–	ML7300892G1	—	. RADAR TRANSMITTER T–332/CPS–6B (See Figure 101–116 for next higher assembly)	Ref	
–1	ML7300942G1	—	. . CHAMBER, pressure	1	
–2	ML7408777G1	—	. . COVER (See Figure 119 for breakdown)	1	
–3	K7008020P1	—	. . GASKET	1	
–4	K7006893P1	—	. . CONTACT, electrical	8	
–5	ML7407599G1	—	. . FILTER, low pass (See Figure 120 for breakdown)	1	
–6	DL9268593G3	Z21409	. . RECTIFIER-MODULATOR (Includes L21401, L21402, T21401 and T21402) (GE)	1	
–7	Coml	—	. . SCREW, cap: slot drive; hex head; SS; 5/16 in–18; 1-1/4 in lg (Att. Pt. for items 5 and 6) (Amer Screw)	22	
–8	Coml	—	. . WASHER, lock: SS; 5/16 in; split ring-type; light series (Att. Pt. for items 5 and 6) (Wrought Washer)	22	
–9	AN340C516	—	. . NUT, hex: SS; 5/16 in–18 (Att. Pt. for items 5 and 6)	22	
–10	B7411344P1	—	. . GASKET	1	
–11	A7014058P1	—	. . SPRING	1	
	ML7014056G1	—	. . ARM	1	
–12	A7014055P1	—	. . SCREW, mach (Att. Pt. for ML7014056G1 and item 11)	1	
–13	AN520–10R16	—	. . . SCREW, mach: Phillips drive; RH; steel, cad pl; No. 10–32; 1 in lg	1	
–14	AN340–10	—	. . . NUT, hex: steel, cad pl; No. 10–32	2	
–15	No Number	—	. . . ARM (A7014056P2 and P3 assembled)	1	
–16	A7014057P1	—	. . TERMINAL, lug	1	
–17	AN340–616	—	. . NUT, hex: steel, cad pl; 3/8 in–16 (Att. Pt.)	1	
–18	AN936B616B	—	. . WASHER, lock: bronze, tinned; round, 3/8 in; shakeproof-type, tw ext teeth (Att. Pt.)	1	
–19	AN960–616	—	. . WASHER, flat: steel, cad pl; 3/8 in (Att. Pt.)	1	
–20	14F363	Z21401	. . NETWORK, pulse forming (GE)	1	
–21	M7483317P2	—	. . GASKET	1	
–22	Coml	—	. . SCREW, cap: hex head; SS; 1/4 in–20; 5/8 in lg (Att. Pt. for items 20 and 21) (Amer Screw)	18	
–23	AN936B416B	—	. . WASHER, lock: bronze, tinned; round, 1/4 in; shakeproof-type, tw ext teeth (Att. Pt. for items 20 and 21)	18	
–24	AN3102PR–28–19P	J21407	. . CONNECTOR, receptacle	1	
–25	K7001232P1	—	. . GASKET	1	
–26	AN515–6R6	—	. . SCREW, mach: Phillips drive; RH; steel, cad pl; No. 6–32; 3/8 in lg (Att. Pt. for items 24 and 25)	4	
–27	AN936B6B	—	. . WASHER, lock: bronze, tinned; round, No. 6; shakeproof-type, tw ext teeth (Att. Pt. for items 24 and 25)	4	
–28	AN515–416R6	—	. . SCREW, mach: Phillips drive; RH; steel, cad pl; 1/4 in–20; 3/8 in lg	2	
–29	AN936B416B	—	. . WASHER, lock: bronze, tinned; round, 1/4 in; shakeproof-type, tw ext teeth	2	
–30	397	P21416	. . CONNECTOR, plug (Birnbach)	1	
–31	397	P21417	. . CONNECTOR, plug (Birnbach)	1	
–32	QK254	V21406	. . TUBE, electron (Raytheon)	1	
–33	Coml	—	. . SCREW, cap: hex head; SS; 3/8 in–16; 1 in lg (Att. Pt.) (Amer Screw)	4	
–34	Coml	—	. . WASHER, lock: SS; 3/8 in; split ring-type; light series (Att. Pt.) (Wrought Washer)	4	
–35	B7408766P17	—	. . GASKET	1	
–36	AN6230–33	—	. . PACKING	1	
–37	168FT	—	. . HOSE (Imperbrass)	1	
–38	001–75004	—	. . FITTING, pipe (Weatherhead)	1	
–39	3144–1–A–440	S21402	. . SWITCH, pressure (Includes 21411) (Eclipse-Pioneer)	1	
–40	A7016628P1	—	. . PLATE, identification	1	
	PL7016627G1	—	. . LEAD, electrical	1	
–41	AN520B10R10	—	. . SCREW, mach: Phillips drive; RH; brass, black, oxidized; No. 10–32; 5/8 in lg (Att. Pt.)	1	
–42	AN936A10B	—	. . WASHER, lock: bronze, tinned; round, No. 10; shakeproof-type, tw int teeth (Att. Pt.)	1	
–43	K7126123P2	—	. . SCREW, thumb (Att. Pt. for PL7016627G1 and item 40)	1	
–44	7–33458	—	. . . TERMINAL, lug (Amphenol)	2	
–45	K7877956P1	—	. . CLIP	4	
	ML7001373G1	—	. . SHACKLE	4	
–46	AN515C516–18	—	. . SCREW, mach: slot drive; RH; SS; 5/16 in–18; 1-1/8 in lg (Att. Pt. for ML7001373G1 and item 45)	8	
–47	Coml	—	. . WASHER, lock: SS; 5/16 in; split ring-type; light series (Att. Pt. for ML7001373G1 and item 45) (Wrought Washer)	8	
–48	K7001373P2	—	. . . PIN, dowel	1	
–49	Coml	—	. . . SCREW, set: Bristo six-spline drive; headless; steel, cad pl; No. 10–32; 3/16 in lg; cup point (Att. Pt.) (Bristolco)	1	
–50	K7877959	—	. . . SHACKLE	1	
–51	K7877957	—	. . . WASHER, spring	2	
–52	K7001365P1	—	. . . BLOCK, support	1	
–53	NP154448E	—	. . PLATE, identification	1	
–54	NP154448F	—	. . PLATE, identification	1	
–55	NP154448B	—	. . PLATE, identification	1	
–56	NP157562C	—	. . PLATE, identification	1	
–57	NP154448C	—	. . PLATE, identification	1	

FIG. & INDEX NO.	PART NUMBER	REF SYMBOL	NOMENCLATURE 1 2 3 4 5 6 7	UNITS PER ASSY	APPLI-CATION
			RADAR TRANSMITTER T–332/CPS–6B (Cont)		
118–58	Coml	—	. . SCREW, self-tapping: Phillips drive; Bind H; SS, tinned; No. 4–40; 3/16 in lg (Att. Pt. for items 53 thru 57) ....(Shakeproof)	12	
	ML7407535G1	Z21412	. . FILTER, low pass	1	
–59	AN515–8R5	—	. . SCREW, mach: Phillips drive; RH; steel, cad pl; No. 8–32; 5/16 in lg (Att. Pt.)	4	
–60	AN936B8B	—	. . WASHER, lock: bronze, tinned; round, No. 8; shakeproof-type, tw ext teeth (Att. Pt.)	4	
–61	UG260/U	P21409	. . . CONNECTOR, plug	1	
–62	UG260/U	P21408	. . . CONNECTOR, plug	1	
–63	No Number	—	. . . FILTER, low pass (B7407535P2 thru P13, P16, P17, P20, P23 thru 26, J21401 and J21402, assembled)	1	
	ML7407535G2	Z21413	. . FILTER, low pass	1	
–64	AN515–8R5	—	. . SCREW, mach: Phillips drive; RH; steel, cad pl; No. 8–32; 5/16 in lg (Att. Pt.)	4	
–65	AN936B8B	—	. . WASHER, lock: bronze, tinned; round, No. 8; shakeproof-type, tw ext teeth (Att. Pt.)	4	
–66	UG260/U	P21406	. . . CONNECTOR, plug	1	
–67	UG260/U	P21405	. . . CONNECTOR, plug	1	
–68	No Number	—	. . . FILTER, low pass (B7407535P2 thru P15, P21, P23 thru P26, J21403 and J21404, assembled)	1	
	ML7407535G3	Z21414	. . FILTER, low pass	1	
–69	AN515–8R5	—	. . SCREW, mach: Phillips drive; RH; steel, cad pl; No. 8–32; 5/16 in lg (Att. Pt.)	4	
–70	AN936B8B	—	. . WASHER, lock: bronze, tinned; round, No. 8; shakeproof-type, tw ext teeth (Att. Pt.)	4	
–71	UG260/U	P21413	. . . CONNECTOR, plug	1	
–72	UG260/U	P21412	. . . CONNECTOR, plug	1	
–73	No Number	—	. . . FILTER, low pass (B7407535P2 thru P13, P18, P19, P22 thru P26, J21414 and J21415, assembled)	1	
–74	UG254A/U	J21409	. . CONNECTOR, receptacle	1	
–75	UG254A/U	J21408	. . CONNECTOR, receptacle	1	
–76	UG254A/U	J21406	. . CONNECTOR, receptacle	1	
–77	UG254A/U	J21405	. . CONNECTOR, receptacle	1	
–78	UG254A/U	J21413	. . CONNECTOR, receptacle	1	
–79	UG254A/U	J21412	. . CONNECTOR, receptacle	1	
–80	NP154449A	—	. . PLATE, identification	1	
–81	Coml	—	. . SCREW, self-tapping: Phillips drive; Bind H; SS, tinned; No. 4–40; 3/16 in lg (Att. Pt.) ....(Shakeproof)	6	
–82	ML7407565G1	—	. . TRIGGER UNIT (See Figure 121 for breakdown)	1	
–83	AN520–10R7	—	. . SCREW, mach: Phillips drive; RH; steel, cad pl; No. 10–32; 7/16 in lg (Att. Pt.)	4	
–84	AN936B10B	—	. . WASHER, lock: bronze, tinned; round, No. 10; shakeproof-type, tw ext teeth (Att. Pt.)	4	
–85	K7004203P1	—	. . CONTACT, electrical	3	
–86	ML7704271G1	—	. . TRANSFORMER SUBASSEMBLY, power (See Figure 122 for breakdown)	1	
–87	AN515–416R6	—	. . SCREW, mach: Phillips drive; RH; steel, cad pl; 1/4 in–20; 3/8 in lg (Att. Pt.)	3	
–88	AN936B416B	—	. . WASHER, lock: bronze, tinned; round, 1/4 in; shakeproof-type, tw ext teeth (Att. Pt.)	3	
–89	A7013911P1	—	. . PLATE, mounting	1	
–90	A7874555P20	—	. . WASHER, flat	3	
–91	AN510–10R6	—	. . SCREW, mach: Phillips drive; FH; steel, cad pl; No. 10–32; 3/8 in lg (Att. Pt. for items 89 and 90)	3	
–92	K7106955P4	—	. . INSULATOR, stand off	3	
–93	A7874555P20	—	. . WASHER, flat	3	
–94	Coml	—	. . STUD: brass, cad pl; No. 10–32; 5/8 in lg; threaded full lg (Att. Pt. for items 92 and 93) ....(Amer Screw)	3	
–95	SPP–9	—	. . CLIP ....(Natl Co)	1	
–96	5949	V21405	. . TUBE, electron	1	
–97	K33405	XV21405	. . SOCKET, tube ....(Mallen)	1	
–98	A7874555P20	—	. . WASHER, flat	4	
	ML7408783G1	—	. . CLAMP	1	
–99	AN515–8R12	—	. . SCREW, mach: Phillips drive; RH; steel, cad pl; No. 8–32; 3/4 in lg (Att. Pt. for ML7408783G1 and items 97 and 98)	4	
–100	AN936B8B	—	. . WASHER, lock: bronze, tinned; round, No. 8; shakeproof-type, tw ext teeth (Att. Pt. for ML7408783G1 and items 97 and 98)	4	
–101	AN960–8	—	. . WASHER, flat: steel, cad pl; No. 8 (Att. Pt. for items 97 and 98)	2	
–102	K7117621P1	—	. . . NUT, thumb	1	
–103	K7117622P1	—	. . . LEVER	1	
–104	K7899998P1	—	. . . COLLAR, locking	1	
–105	M7472146P42	—	. . . PIN, grooved (Att. Pt.)	1	
–106	K7004108P1	—	. . . STUD	1	
–107	B7408783P2	—	. . . CLAMP	1	
–108	SPP–3	—	. . CLIP ....(Natl Co)	1	
	ML7407554G1	L21403	. . COIL, RF	1	
–109	AN515–6R6	—	. . SCREW, mach: Phillips drive; RH; steel, cad pl; No. 6–32; 3/8 in lg (Att. Pt.)	3	

FIG. & INDEX NO.	PART NUMBER	REF SYMBOL	1 2 3 4 5 6 7 NOMENCLATURE	UNITS PER ASSY	APPLI-CATION
			RADAR TRANSMITTER T–332/CPS–6B (Cont)		
118–110	AN936B6B	—	. . WASHER, lock: bronze, tinned; round, No. 6; shakeproof-type, tw ext teeth (Att. Pt.)	3	
–111	A7135118P2	—	. . . TERMINAL, lug	1	
–112	AN515–8R4	—	. . . SCREW, mach: Phillips drive; RH; steel, cad pl; No. 8–32; 1/4 in lg (Att. Pt.)	1	
–113	No Number	—	. . . COIL, RF (A7010862P1, A7010863P1, A7010864P1, B7407554P2 and P8, assembled)	1	
–114	E7300892P59	—	. . STRAP, connector	1	
–115	AN520–10R5	—	. . SCREW, mach: Phillips drive; RH; steel, cad pl; No. 10–32; 5/16 in lg (Att. Pt.)	1	
–116	AN936B10B	—	. . WASHER, lock: bronze, tinned; round, No. 10; shakeproof-type, tw ext teeth (Att. Pt.)	1	
–117	C7707213P1	T21406	. . TRANSFORMER, pulse	1	
–118	Coml	—	. . SCREW, cap: hex head; SS; 5/16 in–18; 3/4 in lg (Att. Pt.)..(Amer Screw)	8	
–119	Coml	—	. . WASHER, lock: SS; 5/16 in; split ring-type; light series (Att. Pt.) (Wrought Washer)	8	
–120	B7408766P18	—	. . GASKET	1	
–121	AN6230–43	—	. . PACKING	1	
–122	ML7460330G4	S21401	. . SWITCH, interlock	1	
–123	AN515–6R12	—	. . SCREW, mach: Phillips drive; RH; steel, cad pl; No. 6–32; 3/4 in lg (Att. Pt.)	2	
–124	AN936B6B	—	. . WASHER, lock: bronze, tinned; round, No. 6; shakeproof-type, tw ext teeth (Att. Pt.)	2	
–125	AN515–6R18	—	. . SCREW, mach: Phillips drive; RH; steel, cad pl; No. 6–32; 1-1/8 in lg (Att. Pt.)	2	
–126	AN936B6B	—	. . WASHER, lock: bronze, tinned; round, No. 6; shakeproof-type, tw ext teeth (Att. Pt.)	2	
–127	AN340–6	—	. . NUT, hex: steel, cad pl; No. 6–32 (Att. Pt.)	2	
–128	ST52N	S21406	. . SWITCH, toggle	1	
–129	AN3028–1	—	. . GUARD	1	
–130	A7010215P1	—	. . BRACKET	1	
–131	AN515–8R7	—	. . SCREW, mach: Phillips drive; RH; steel, cad pl; No. 8–32; 7/16 in lg (Att. Pt.)	2	
–132	AN936B8B	—	. . WASHER, lock: bronze, tinned; round, No. 8; shakeproof-type, tw ext teeth (Att. Pt.)	2	
–133	Coml	I21402	. . LAMP, incandescent: Mazda 6S6, 115 v, 6 w	1	
–134	AG–132	XI21402	. . HOLDER, lamp (Culver-Stearns)	1	
–135	A7014073P2	—	. . BRACKET	1	
–136	AN515–6R5	—	. . SCREW, mach: Phillips drive; RH; steel, cad pl; No. 6–32; 5/16 in lg (Att. Pt.)	2	
–137	AN936B6B	—	. . WASHER, lock: bronze, tinned; round, No. 6; shakeproof-type, tw ext teeth (Att. Pt.)	2	
–138	AN3102–28–20S	J21418	. . CONNECTOR, receptacle	1	
–139	AN515–6R7	—	. . SCREW, mach: Phillips drive; RH; steel, cad pl; No. 10–32; 7/16 in lg (Att. Pt.)	4	
–140	AN936B6B	—	. . WASHER, lock: bronze, tinned; round, No. 6; shakeproof-type, tw ext teeth (Att. Pt.)	4	
–141	AN340–6	—	. . NUT, hex: steel, cad pl; No. 6–32 (Att. Pt.)	4	
–142	NP151704L	—	. . PLATE, identification	1	
–143	Coml	—	. . SCREW, self-tapping: Phillips drive; Bind H; SS, tinned; No. 4–40; 3/16 in lg (Att. Pt.) (Shakeproof)	2	
–144	A7014216P1	—	. . BRACKET	1	
–145	T7600940P1	—	. . COVER	1	
–146	AN515–6R5	—	. . SCREW, mach: Phillips drive; RH; steel, cad pl; No. 6–32; 5/16 in lg (Att. Pt.)	15	
–147	AN936B6B	—	. . WASHER, lock: bronze, tinned; round, No. 6; shakeproof-type, tw ext teeth (Att. Pt.)	15	
–148	AN960–6	—	. . WASHER, flat: steel, cad pl; No. 6 (Att. Pt.)	9	
–149	AN515–6R10	—	. . SCREW, mach: Phillips drive; RH; steel, cad pl; No. 6–32; 5/8 in lg (Att. Pt. for items 144 and 145)	2	
–150	AN936B6B	—	. . WASHER, lock: bronze, tinned; round, No. 6; shakeproof-type, tw ext teeth (Att. Pt. for items 144 and 145)	2	
–151	AN340–6	—	. . NUT, hex: steel, cad pl; No. 6–32 (Att. Pt. for items 144 and 145)	2	
–152	P7702835P1	—	. . BRACKET	1	
–153	AN515–8R7	—	. . SCREW, mach: Phillips drive; RH; steel, cad pl; No. 8–32; 7/16 in lg (Att. Pt.)	2	
–154	AN936B8B	—	. . WASHER, lock: bronze, tinned; round, No. 8; shakeproof-type, tw ext teeth (Att. Pt.)	2	
	P7771664	E21401	. . TRANSFORMER, variable power	1	
–155	Coml	—	. . SCREW, mach: hex head; SS; 1/4 in–20; 5/8 in lg (Att. Pt.)..(Amer Screw)	4	
–156	Coml	—	. . WASHER, lock: SS; 1/4 in; split ring-type; light series (Att. Pt.) (Wrought Washer)	4	
–157	10–A5	B21401	. . . MOTOR, DC: 28 v, 0.8 to 1.1 amp (Eisemann)	1	
–158	AN520–10R12	—	. . . SCREW, mach: Phillips drive; RH; steel, cad pl; No. 10–32; 3/4 in lg (Att. Pt.)	3	
–159	AN936B10B	—	. . . WASHER, lock: bronze, tinned; round, No. 10; shakeproof-type, tw ext teeth (Att. Pt.)	3	

FIG. & INDEX NO.	PART NUMBER	REF SYMBOL	NOMENCLATURE 1 2 3 4 5 6 7	UNITS PER ASSY	APPLI-CATION
			RADAR TRANSMITTER T-332/CPS-6B (Cont)		
118–160	AN345–10	—	. . . NUT, hex: steel, cad pl; No. 10–32 (Att. Pt.)	3	
–161	S961	—	. . . TRANSFORMER, variable power (Includes S21404, S21405, TB21402 and T21408) (Superior Elec)	1	
–162	K7108488P1	J21419	. . CONNECTOR, receptacle	1	
–163	K7108488P1	J21420	. . CONNECTOR, receptacle	1	
–164	K7108488P1	J21421	. . CONNECTOR, receptacle	1	
–165	A7013917P1	—	. . BRACKET	1	
–166	AN515–6R5	—	. . SCREW, mach: Phillips drive; RH; steel, cad pl; No. 6–32; 5/16 in lg (Att. Pt.)	4	
–167	AN936B6B	—	. . WASHER, lock: bronze, tinned; round, No. 6; shakeproof-type, tw ext teeth (Att. Pt.)	4	
–168	26F828	C21401	. . CAPACITOR, fixed (GE)	1	
–169	AN515–416R14	—	. . SCREW, mach: Phillips drive; RH; steel, cad pl; 1/4 in–20; 7/8 in lg (Att. Pt.)	4	
–170	AN936B416B	—	. . WASHER, lock: bronze, tinned; round, 1/4 in; shakeproof-type, tw ext teeth (Att. Pt.)	4	
–171	26F752	C21402	. . CAPACITOR, fixed (GE)	1	
–172	AN515–416R14	—	. . SCREW, mach: Phillips drive; RH; steel, cad pl; 1/4 in–20; 7/8 in lg (Att. Pt.)	4	
–173	AN936B416B	—	. . WASHER, lock: bronze, tinned; round, 1/4 in; shakeproof-type, tw ext teeth (Att. Pt.)	4	
–174	AN340–416	—	. . NUT, hex: steel, cad pl; 1/4 in–20; (Att. Pt.)	4	
–175	M7480938P22	R21401	. . RESISTOR, fixed	1	
–176	M7482618P2	R21402	. . RESISTOR, fixed	1	
–177	RW15G101	R21413	. . RESISTOR, fixed	1	
–178	K–17–7A	—	. . CLIP (Trumbull)	2	
–179	ML7132758G1	—	. . CLIP	1	
–180	ML7132759G1	—	. . CLIP	1	
–181	K–12–3A	—	. . CLIP (Trumbull)	2	
–182	K7107772P1	—	. . CLIP	6	
–183	AN520–10R8	—	. . SCREW, mach: Phillips drive; RH; steel, cad pl; No. 10–32; 1/2 in lg (Att. Pt. for items 178 thrugh 182)	6	
–184	AN936B10B	—	. . WASHER, lock: bronze, tinned; round, No. 10; shakeproof-type, tw ext teeth (Att. Pt. for items 178 thrugh 182)	6	
–185	SPP–9	—	. . CLIP (Natl Co)	3	
–186	SPP–3	—	. . CLIP (Natl Co)	1	
–187	8020	V21403	. . TUBE, electron	1	
–188	576	V21404	. . TUBE, electron	1	
–189	8020	V21402	. . TUBE, electron	1	
–190	8020	V21401	. . TUBE, electron	1	
–191	C7705010P1	—	. . PLATE, mounting	1	
–192	A7874555P20	—	. . WASHER, flat	6	
–193	AN515–416R12	—	. . SCREW, mach: Phillips drive; RH; steel, cad pl; 1/4 in–20; 3/4 in lg (Att. Pt. for items 191 and 192)	6	
–194	AN936B416B	—	. . WASHER, lock: bronze, tinned; round, 1/4 in; shakeproof-type, tw ext teeth (Att. PtE. for items 191 and 192)	6	
–195	123–209–14	XV21403	. . SOCKET, tube (Johnson EF)	1	
–196	123–209–14	XV21402	. . SOCKET, tube (Johnson EF)	1	
–197	123–209–14	XV21401	. . SOCKET, tube (Johnson EF)	1	
–198	A7874555P20	—	. . WASHER, flat	12	
–199	AN520–10R20	—	. . SCREW, mach: Phillips drive; RH; steel, cad pl; No. 10–32; 1-1/4 in lg (Att. Pt. for items 195 thru 198)	12	
–200	AN936B10B	—	. . WASHER, lock: bronze, tinned; round, No. 10; shakeproof-type, tw ext teeth (Att. Pt. for items 195 thru 198)	12	
–201	AN345–10	—	. . NUT, hex: steel, cad pl; No. 10–32 (Att. Pt. for items 195 thru 198)	12	
–202	851587	—	. . CLAMP (Waterfield)	1	
–203	122–244–7	XV21404	. . SOCKET, tube (Johnson EF)	1	
–204	A7874555P20	—	. . WASHER, flat	4	
–205	AN515–6R12	—	. . SCREW, mach: Phillips drive; RH; steel, cad pl; No. 6–32; 3/4 in lg (Att. Pt. for items 202, 203, and 204)	4	
–206	AN936B6B	—	. . WASHER, lock: bronze, tinned; round, No. 6; shakeproof-type, tw ext teeth (Att. Pt. for items 202, 203, and 204)	4	
–207	AN960–6	—	. . WASHER, flat: steel, cad pl; No. 6 (Att. Pt. for items 202, 203, and 204)	4	
–208	B7410000P1	—	. . MOUNTING, socket	1	
–209	A7874555P20	—	. . WASHER, flat	4	
–210	AN520–10R10	—	. . SCREW, mach: Phillips drive; RH; steel, cad pl; No. 10–32; 5/8 in lg (Att. Pt. for items 208 and 209)	4	
–211	AN936B10B	—	. . WASHER, lock: bronze, tinned; round, No. 10; shakeproof-type, tw ext teeth (Att. Pt. for items 208 and 209)	4	
–212	RC42BF471J	R21406	. . RESISTOR, fixed	1	
–213	RC42BF473J	R21414	. . RESISTOR, fixed	1	
–214	K7878455P2	—	. . TERMINAL, lug	3	
–215	AN515–6R12	—	. . SCREW, mach: Phillips drive; RH; steel, cad pl; No. 6–32; 3/4 in lg (Att. Pt.)	3	
–216	AN936B6B	—	. . WASHER, lock: bronze, tinned; round, No. 6; shakeproof-type, tw ext teeth (Att. Pt.)	3	
–217	AN340–6	—	. . NUT, hex: steel, cad pl; No. 6–32 (Att. Pt.)	3	

FIG. & INDEX NO.	PART NUMBER	REF SYMBOL	NOMENCLATURE 1 2 3 4 5 6 7	UNITS PER ASSY	APPLI-CATION
			RADAR TRANSMITTER T–332/CPS–6B (Cont)		
118–218	NS4W1216	—	. . INSULATOR, standoff	2	
–219	K7107772P1	—	. . CLIP	2	
–220	NP72549G	—	. . PLATE, identification	1	
–221	AN520–10R10	—	. . SCREW, mach: Phillips drive; RH; steel, cad pl; No. 10–32; 5/8 in lg (Att. Pt. for items 218, 219, and 220)	2	
–222	AN936B10B	—	. . WASHER, lock: bronze, tinned; round, No. 10; shakeproof-type, tw ext teeth (Att. Pt. for items 218, 219, and 220)	2	
–223	A7015123P1	—	. . PLATE, mounting	1	
–224	A7015122P1	—	. . PLATE, mounting	1	
–225	E7300892P132	—	. . WASHER, flat	1	
–226	A7874555P20	—	. . WASHER, flat	2	
–227	AN515–416R12	—	. . SCREW, mach: Phillips drive; RH; steel, cad pl; 1/4 in–20; 3/4 in lg (Att. Pt. for items 223 thru 226)	4	
–228	AN936B416B	—	. . WASHER, lock: bronze, tinned; round, 1/4 in; shakeproof-type, tw ext teeth (Att. Pt. for items 223 thru 226)	4	
–229	NS4W1216	—	. . INSULATOR, standoff	4	
–230	K7107772P1	—	. . CLIP	4	
–231	NP72549G	—	. . PLATE, identification	2	
–232	AN520–10R10	—	. . SCREW, mach: Phillips drive; RH; steel, cad pl; No. 10–32; 5/8 in lg (Att. Pt. for items 229, 230 and 231)	4	
–233	AN936B10B	—	. . WASHER, lock: bronze, tinned; round, No. 10; shakeproof-type, tw ext teeth (Att. Pt. for items 229, 230 and 231)	4	
–234	Coml	I21401	. . LAMP, incandescent: Mazda 6S6, 115 v, 6 w	1	
–235	AG–132	XI21401	. . HOLDER, lamp (Culver-Stearns)	1	
–236	A7014073P1	—	. . MOUNTING, bracket	1	
–237	AN515–6R5	—	. . SCREW, mach: Phillips drive; RH; steel, cad pl; No. 6–32; 5/16 in lg (Att. Pt.)	2	
–238	AN936B6B	—	. . WASHER, lock: bronze, tinned; round, No. 6; shakeproof-type, tw ext teeth (Att. Pt.)	2	
–239	K7006860P1	—	. . INSULATOR, plate	2	
–240	AN515–4R5	—	. . SCREW, mach: Phillips drive; RH; steel, cad pl; No. 4–40; 5/16 in lg (Att. Pt.)	4	
–241	AN936B4B	—	. . WASHER, lock: bronze, tinned; round, No. 4; shakeproof-type, tw ext teeth (Att. Pt.)	4	
–242	K7106955P4	—	. . INSULATOR, standoff	1	
–243	A7874555P20	—	. . WASHER, flat	1	
–244	Coml	—	. . STUD: brass, cad pl; No. 10–32; 5/8 in lg; threaded full lg (Att. Pt. for items 242 and 243) (Amer Screw)	1	
–245	CP70B1FG105K	C21405	. . CAPACITOR, fixed	1	
–246	K7875350P1	—	. . TERMINAL, lug	1	
–247	CP07SA2	—	. . CLAMP (Att. Pt. for items 245 and 246)	2	
–248	AN345–10	—	. . NUT, hex: steel, cad pl; No. 10–32 (Att. Pt. for items 245 and 246)	2	
–249	AN936B10B	—	. . WASHER, lock: bronze, tinned; round, No. 10; shakeproof-type, tw ext teeth (Att. Pt. for items 245 and 246)	2	
–250	RW34F103	R21405	. . RESISTOR, fixed	1	
–251	Coml	—	. . STUD: brass, cad pl; No. 8–32; 3-3/4 in lg; threaded full lg (Att. Pt.) (Amer Screw)	1	
–252	2515.13–5	—	. . WASHER, extruded (Att. Pt.) (WL)	2	
–253	2.6–20	—	. . WASHER, flat (Att. Pt.) (WL)	2	
–254	AN936B8B	—	. . WASHER, lock: bronze, tinned; round, No. 8; shakeproof-type, tw ext teeth (Att. Pt.)	2	
–255	AN340–8	—	. . NUT, hex: steel, cad pl; No. 8–32 (Att. Pt.)	2	
–256	7481511	T21404	. . TRANSFORMER, power (GE)	1	
–257	K7875350P1	—	. . TERMINAL, lug	1	
–258	AN520–10R8	—	. . SCREW, mach: Phillips drive; RH; steel, cad pl; No. 10–32; 1/2 in lg (Att. Pt. for items 256 and 257)	4	
–259	AN936B10B	—	. . WASHER, lock: bronze, tinned; round, No. 10; shakeproof-type, tw ext teeth (Att. Pt. for items 256 and 257)	4	
–260	CP63B1FF105K	C21404	. . CAPACITOR, fixed	1	
–261	AN515–6R6	—	. . SCREW, mach: Phillips drive; RH; steel, cad pl; No. 6–32; 3/8 in lg (Att. Pt.)	2	
–262	AN936B6B	—	. . WASHER, lock: bronze, tinned; round, No. 6; shakeproof-type, tw ext teeth (Att. Pt.)	2	
–263	Z–16131	T21403	. . TRANSFORMER, power (GE)	1	
–264	K7878455P2	—	. . TERMINAL, lug	1	
–265	AN515–6R5	—	. . SCREW, mach: Phillips drive; RH; steel, cad pl; No. 6–32; 5/8 in lg (Att. Pt. for items 263 and 264)	4	
–266	AN936B6B	—	. . WASHER, lock: bronze, tinned; round, No. 6; shakeproof-type, tw ext teeth (Att. Pt. for items 263 and 264)	4	
–267	NP154448A	—	. . PLATE, identification	1	
–268	Coml	—	. . SCREW, self-tapping: Phillips drive; Bind H; SS, tinned; No. 4–40; 3/16 in lg (Att. Pt.) (Shakeproof)	2	

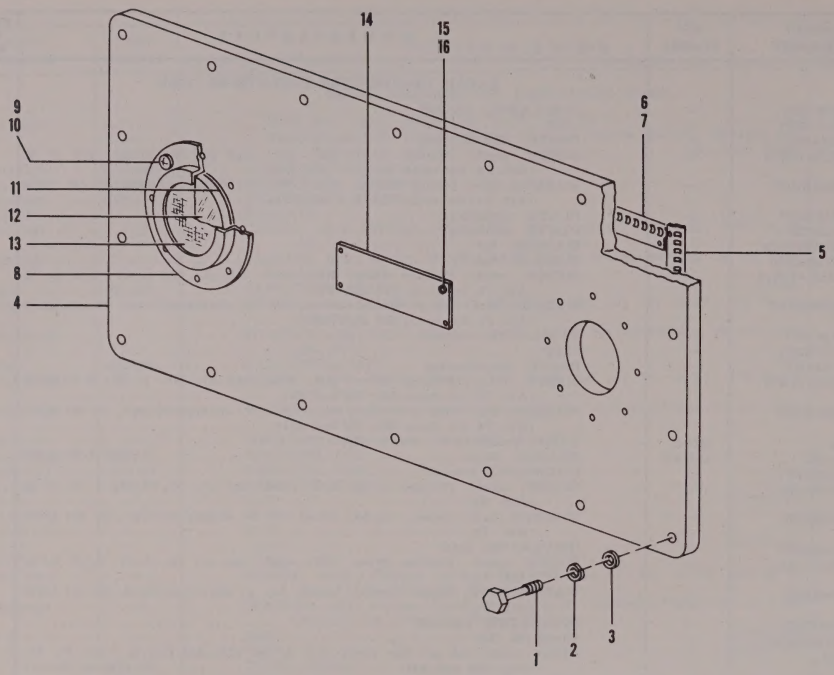

Figure 119. Cover

FIG. & INDEX NO.	PART NUMBER	REF SYMBOL	1 2 3 4 5 6 7 NOMENCLATURE	UNITS PER ASSY	APPLI-CATION
			COVER		
119–	ML7408777G1	—	. . COVER (See Figure 118–2 for next higher assembly)	Ref	
–1	K7001202P2	—	. . . SCREW, thumb	18	
–2	Coml	—	. . . WASHER, lock: SS; 1/4 in; light series (Wrought Washer)	18	
–3	AN6227–5	—	. . . PACKING	18	
–4	ML7408774G1	—	. . . COVER	1	
–5	K7007243P9	—	. . . CONTACT, electrical	2	
–6	K7007243P6	—	. . . CONTACT, electrical	4	
–7	AN515–2R4	—	. . . SCREW, mach: Phillips drive; RH; steel, cad pl; No. 2–56; 1/4 in lg (Att. Pt. for items 5 and 6)	34	
–8	K7001374P1	—	. . . BEZEL	2	
–9	AN520–10R6	—	. . . SCREW, mach: Phillips drive; RH; steel, cad pl; No. 10–32; 3/8 in lg (Att. Pt.)	16	
–10	AN936A10B	—	. . . WASHER, lock: bronze, tinned; round, No. 10; shakeproof-type, tw int teeth (Att. Pt.)	16	
–11	K7001201P1	—	. . . GASKET	2	
–12	K7001200P1	—	. . . DISK, window	2	
–13	K7008025P1	—	. . . CLOTH, wire	2	
–14	NP136201	—	. . . PLATE, identification	1	
–15	Coml	—	. . . SCREW, self-tapping: Phillips drive; pan head; SS; No. 4–40; 3/16 in lg (Att. Pt.) (Shakeproof)	4	
–16	AN936A4B	—	. . . WASHER, lock: bronze, tinned; round, No. 4; shakeproof-type, tw int teeth (Att. Pt.)	4	

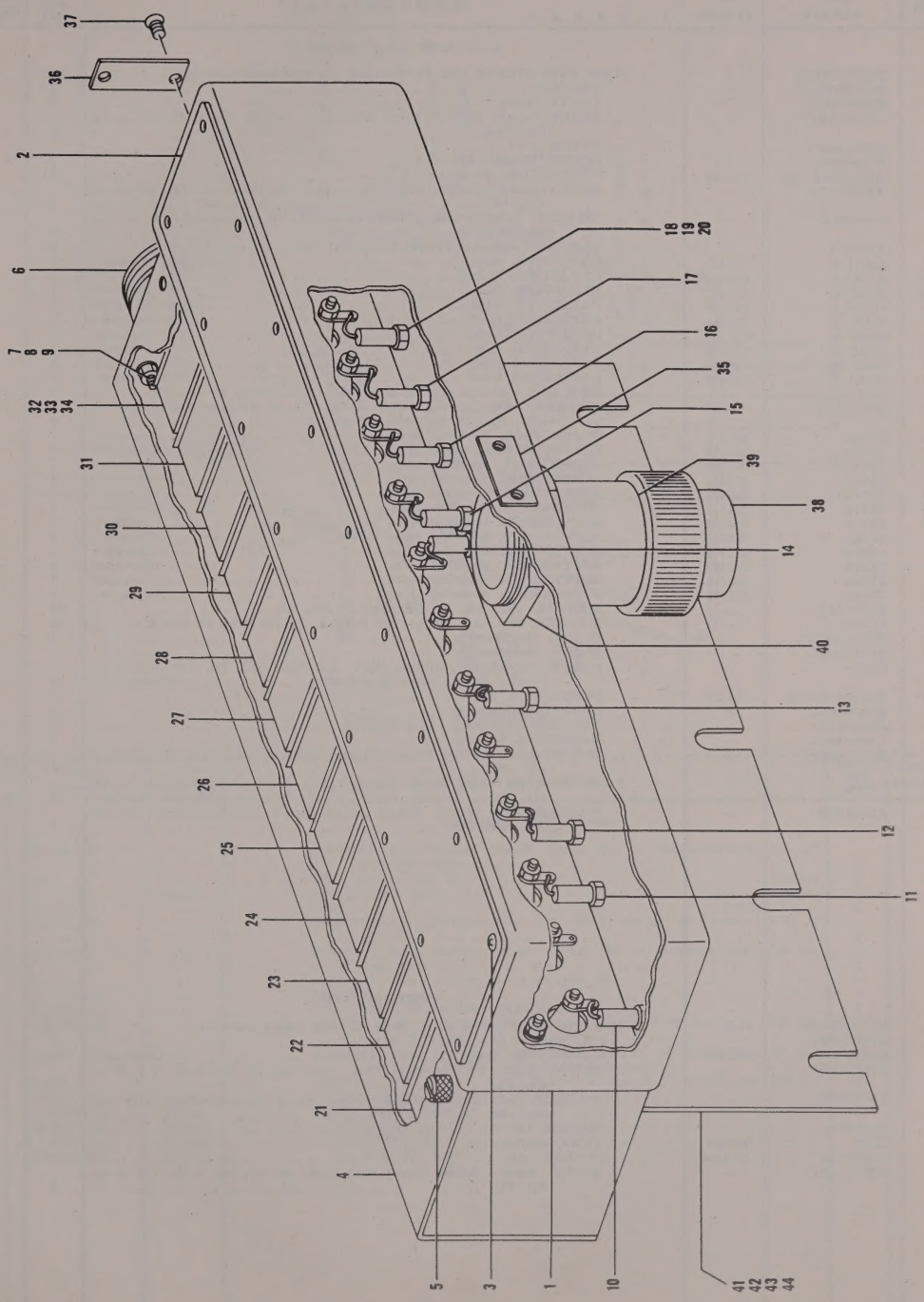

Figure 120. Low Pass Filter

FIG. & INDEX NO.	PART NUMBER	REF SYMBOL	NOMENCLATURE 1 2 3 4 5 6 7	UNITS PER ASSY	APPLI-CATION
			LOW PASS FILTER		
120–	ML7407599G1	—	. . LOW PASS FILTER (See Figure 118–5 for next higher assembly)	Ref	
–1	ML7408788G1	—	. . . CABINET	1	
–2	K7007951P1	—	. . . PLATE, cover	1	
–3	AN515–6R10	—	. . . SCREW, mach: Phillips drive; RH; steel, cad pl; No. 6–32; 5/8 in lg (Att. Pt.)	18	
–4	K7007950P1	—	. . . COVER	1	
–5	K7126808P1	—	. . . SCREW, thumb (Att. Pt.)	5	
–6	AN3102–28–19P	J21410	. . . CONNECTOR, receptacle	1	
–7	AN515–4R6	—	. . . SCREW, mach: Phillips drive; RH; steel, cad pl; No. 4–40; 3/8 in lg (Att. Pt.)	4	
–8	AN936A4B	—	. . . WASHER, lock: bronze, tinned; round, No. 4; shakeproof-type, tw int teeth (Att. Pt.)	4	
–9	AN340–4	—	. . . NUT, hex: steel, cad pl; No. 4–40 (Att. Pt.)	4	
–10	323HI–K	C21414	. . . CAPACITOR, fixed (Erie Resistor)	1	
–11	323HI–K	C21412	. . . CAPACITOR, fixed (Erie Resistor)	1	
–12	323HI–K	C21411	. . . CAPACITOR, fixed (Erie Resistor)	1	
–13	323HI–K	C21410	. . . CAPACITOR, fixed (Erie Resistor)	1	
–14	323HI–K	C21418	. . . CAPACITOR, fixed (Erie Resistor)	1	
–15	323HI–K	C21417	. . . CAPACITOR, fixed (Erie Resistor)	1	
–16	323HI–K	C21416	. . . CAPACITOR, fixed (Erie Resistor)	1	
–17	323HI–K	C21413	. . . CAPACITOR, fixed (Erie Resistor)	1	
–18	323HI–K	C21415	. . . CAPACITOR, fixed (Erie Resistor)	1	
–19	AN340–6	—	. . . NUT, hex: steel, cad pl; No. 6–32 (Att. Pt. for items 10 thru 18)	9	
–20	AN936A6B	—	. . . WASHER, lock: bronze, tinned; round, No. 6; shakeproof-type, tw int teeth (Att. Pt. for items 10 thru 18)	9	
–21	JX65A	Z21411	. . . SUPPRESSOR, electrical noise (Sprague)	1	
–22	JX65A	Z21415	. . . SUPPRESSOR, electrical noise (Sprague)	1	
–23	JX65A	Z21406	. . . SUPPRESSOR, electrical noise (Sprague)	1	
–24	JX65A	Z21416	. . . SUPPRESSOR, electrical noise (Sprague)	1	
–25	JX65A	Z21407	. . . SUPPRESSOR, electrical noise (Sprague)	1	
–26	JX65A	Z21417	. . . SUPPRESSOR, electrical noise (Sprague)	1	
–27	JX65A	Z21408	. . . SUPPRESSOR, electrical noise (Sprague)	1	
–28	JX65A	Z21410	. . . SUPPRESSOR, electrical noise (Sprague)	1	
–29	JX65A	Z21404	. . . SUPPRESSOR, electrical noise (Sprague)	1	
–30	JX65A	Z21403	. . . SUPPRESSOR, electrical noise (Sprague)	1	
–31	JX65A	Z21402	. . . SUPPRESSOR, electrical noise (Sprague)	1	
–32	JX65A	Z21405	. . . SUPPRESSOR, electrical noise (Sprague)	1	
–33	K7008196P1	—	. . . WASHER, flat (Att. Pt. for items 21 thru 32)	24	
–34	945–6P	—	. . . WASHER, flat: steel, cad pl; 3/8 in (Att. Pt. for items 21 thru 32)	12	
–35	NP154448DP7	—	. . . PLATE, identification	1	
–36	NP151704K	—	. . . PLATE, identification	1	
–37	Coml	—	. . . SCREW, self-tapping: Phillips drive; pan head; SS; No. 4–40; 1/4 in lg (Att. Pt. for items 35 and 36) (Shakeproof)	4	
–38	AN3106–28–19S	P21407	. . . CONNECTOR, plug	1	
–39	K7007968P1	—	. . . ADAPTER, connector	1	
–40	AN3066–20	—	. . . NUT, lock (Att. Pt.)	2	
–41	A7013899P1	—	. . . MOUNTING, bracket	1	
–42	AN515–8R4	—	. . . SCREW, mach: Phillips drive; pan head; steel, cad pl; No. 8–32; 1/4 in lg (Att. Pt.)	3	
–43	Coml	—	. . . WASHER, flat: brass, cad pl; round, 0.188 in ID, 0.500 in OD, 0.040 in thk (Att. Pt.) (Wrought Washer)	3	
–44	AN936B8B	—	. . . WASHER, lock: bronze, tinned; round, No. 8; shakeproof-type, tw ext teeth (Att. Pt.)	3	
			TRIGGER UNIT		
121–	ML7407565G1	—	. . TRIGGER UNIT (See Figure 118–82 for next higher assembly)	Ref	
–1	B7407564P1	—	. . . CHASSIS	1	
–2	DA045–001	C21409	. . . CAPACITOR, fixed (Centralab)	1	
–3	AN515–6R4	—	. . . SCREW, mach: Phillips drive; RH; steel, cad pl; No. 6–32; 1/4 in lg (Att. Pt.)	1	
–4	AN936B6B	—	. . . WASHER, lock: bronze, tinned; round No. 6; shakeproof-type; tw ext teeth (Att. Pt.)	1	
–5	TSF0T102	—	. . . SHIELD, tube	1	
–6	2D21	V21407	. . . TUBE, electron	1	
–7	TSE7T102	XV21407	. . . SOCKET, tube	1	
–8	AN515–4R4	—	. . . SCREW, mach: Phillips drive; RH; steel, cad pl; No. 4–40; 1/4 in lg (Att. Pt.)	2	

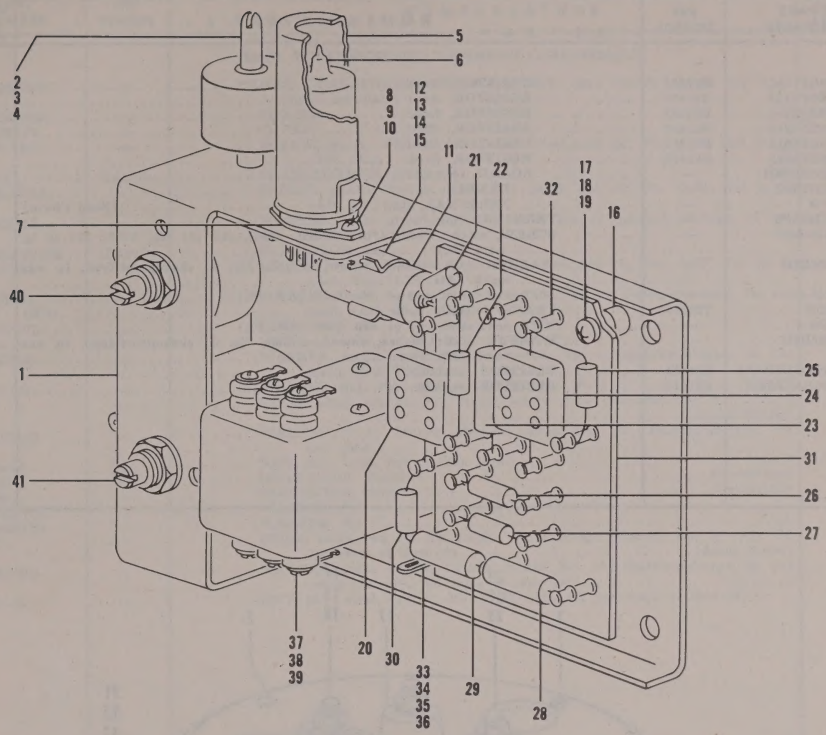

Figure 121. Trigger Unit

FIG. & INDEX NO.	PART NUMBER	REF SYMBOL	1 2 3 4 5 6 7 NOMENCLATURE	UNITS PER ASSY	APPLI-CATION
			TRIGGER UNIT (Cont)		
121–9	AN936B4B	—	. . . WASHER, lock: bronze, tinned; round, No. 4; shakeproof-type, tw ext teeth (Att. Pt.)	2	
–10	1060	—	. . . NUT, anchor (Att. Pt.) (Cinch)	1	
–11	191P10404	C21408	. . . CAPACITOR, fixed (Sprague)	1	
–12	500–800	—	. . . CLIP (Prestole Corp)	1	
–13	AN515–4R4	—	. . . SCREW, mach: Phillips drive; RH; steel, cad pl; No. 4–40; 1/4 in lg (Att. Pt.)	1	
–14	AN936B4B	—	. . . WASHER, lock: bronze, tinned; round, No. 4; shakeproof-type, tw ext teeth (Att. Pt.)	1	
–15	AN340–4	—	. . . NUT, hex: steel, cad pl; No. 4–40 (Att. Pt.)	1	
–16	B7407565P6	—	. . . SLEEVE, spacer	3	
	ML7012754G1	—	. . . CAPACITOR-RESISTOR ASSEMBLY	1	
–17	AN515–6R12	—	. . . SCREW, mach: Phillips drive; steel, cad pl; No. 6–32; 3/4 in lg (Att. Pt. for ML7012754G1 and item 16)	3	
–18	AN936B6B	—	. . . WASHER, lock: bronze, tinned; round, No. 6; shakeproof-type, tw ext teeth (Att. Pt. for ML7012754G1 and item 16)	3	
–19	AN340–6	—	. . . NUT, hex: steel, cad pl; No. 6–32 (Att. Pt. for ML7012754G1 and item 16)	3	
–20	CM30D102K	C21407	. . . . CAPACITOR, fixed	1	
–21	RC20BF103J	R21416	. . . . RESISTOR, fixed	1	
–22	RC20BF152J	R21411	. . . . RESISTOR, fixed	1	
–23	RC42BF104J	R21409	. . . . RESISTOR, fixed	1	
–24	CM35B103K	C21406	. . . . CAPACITOR, fixed	1	

FIG. & INDEX NO.	PART NUMBER	REF SYMBOL	NOMENCLATURE 1 2 3 4 5 6 7	UNITS PER ASSY	APPLI-CATION
			TRIGGER UNIT (Cont)		
121–25	RC20BF102J	R21404	. . . . RESISTOR, fixed	1	
–26	RC20BF473J	R21407	. . . . RESISTOR, fixed	1	
–27	RC20BF330J	R21408	. . . . RESISTOR, fixed	1	
–28	RC30BF221J	R21417	. . . . RESISTOR, fixed	1	
–29	RC30BF101J	R21415	. . . . RESISTOR, fixed	1	
–30	RC20BF102J	R21410	. . . . RESISTOR, fixed	1	
	ML7012753G1	—	. . . . BOARD, terminal	1	
–31	A7012753P2	—	. . . . . PANEL	1	
–32	T100–3	—	. . . . . TERMINAL, stud (Bead Chain)	16	
–33	K7878455P2	—	. . . TERMINAL, lug	1	
–34	AN515–6R6	—	. . . SCREW, mach: Phillips drive; RH; steel, cad pl; No. 6–32; 3/8 in lg (Att. Pt.)	1	
–35	AN936B6B	—	. . . WASHER, lock: bronze, tinned; round, No. 6; shakeproof-type, tw ext teeth (Att. Pt.)	1	
–36	AN340–6	—	. . . NUT, hex: steel, cad pl; No. 6–32 (Att. Pt.)	1	
–37	7483200	T21407	. . . TRANSFORMER, pulse (GE)	1	
–38	AN340–6	—	. . . NUT, hex: steel, cad pl; No. 6–32 (Att. Pt.)	2	
–39	AN936B6B	—	. . . WASHER, lock: bronze, tinned; round, No. 6; shakeproof-type, tw ext teeth (Att. Pt.)	2	
–40	RA20A25D8R0AK	R21403	. . . RESISTOR, variable	1	
–41	RP101SA2R5KK	R21412	. . . RESISTOR, variable	1	

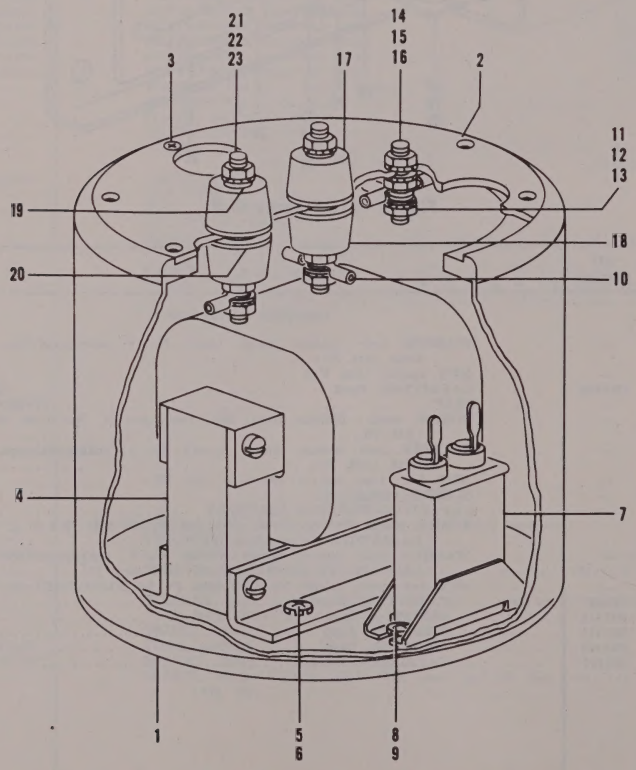

Figure 122. Power Transformer Subassembly

FIG. & INDEX NO.	PART NUMBER	REF SYMBOL	NOMENCLATURE 1 2 3 4 5 6 7	UNITS PER ASSY	APPLI-CATION
			POWER TRANSFORMER SUBASSEMBLY		
122–	ML7704271G1	—	. . POWER TRANSFORMER SUBASSEMBLY (See Figure 118–86 for next higher assembly)	Ref	
–1	ML7704270G1	—	. . . CHASSIS	1	
–2	A7011989P1	—	. . . COVER	1	
–3	AN505–4R6	—	. . . SCREW, mach: Phillips drive; FH; steel, cad pl; No. 4–40; 3/8 in lg (Att. Pt.)	8	
–4	7406968	T21405	. . . TRANSFORMER, power (GE)	1	
–5	AN520–10R6	—	. . . SCREW, mach: Phillips drive; RH; steel, cad pl; No. 10–32; 3/8 in lg (Att. Pt.)	4	
–6	AN936B10B	—	. . . WASHER, lock: bronze, tinned; round, No. 10; shakeproof-type, tw ext teeth (Att. Pt.)	4	
–7	CP63B1FE105K	C21403	. . . CAPACITOR, fixed	1	
–8	AN515–6R4	—	. . . SCREW, mach: Phillips drive; RH; steel, cad pl; No. 6–32; 1/4 in lg (Att. Pt.)	2	
–9	AN936B6B	—	. . . WASHER, lock: bronze, tinned; round, No. 6; shakeproof-type, tw ext teeth (Att. Pt.)	2	
–10	K7891270P3	—	. . . TERMINAL, lug	6	
–11	AN345–10	—	. . . NUT, hex: steel, cad pl; No. 10–32 (Att. Pt.)	3	
–12	AN936B6B	—	. . . WASHER, lock: bronze, tinned; round, No. 6; shakeproof-type, tw ext teeth (Att. Pt.)	3	
–13	AN960–10	—	. . . WASHER, flat: steel, cad pl; No. 10 (Att. Pt.)	3	
–14	Coml	—	. . . STUD: brass, cad pl; No. 10–32; 1-1/16 in lg; threaded full lg (Amer Screw)	1	
–15	AN936B10B	—	. . . WASHER, lock: bronze, tinned; round, No. 10; shakeproof-type, tw ext teeth	2	
–16	AN345–10	—	. . . NUT, hex: steel, cad pl; No. 10–32	2	
–17	1430–00	—	. . . INSULATOR, feedthru (Genceraco)	2	
–18	1431–00	—	. . . INSULATOR, feedthru (Genceraco)	2	
–19	K7874555P33	—	. . . WASHER, flat	4	
–20	K7874555P24	—	. . . WASHER, flat	4	
–21	Coml	—	. . . STUD: brass, cad pl; No. 10–32; 2-3/16 in lg; threaded full lg (Att. Pt. for items 17 thru 20) (Amer Screw)	2	
–22	AN936B10B	—	. . . WASHER, lock: bronze, tinned; round, No. 10; shakeproof-type, tw ext teeth (Att. Pt. for items 17 thru 20)	2	
–23	AN345–10	—	. . . NUT, hex: steel, cad pl; No. 10–32 (Att. Pt. for items 17 thru 20)	4	
			RF OSCILLATOR O–166/CPS–6B		
123–	ML7704491G1	—	. RF OSCILLATOR O–166/CPS–6B (See Figure 101–131 for next higher assembly)	Ref	
–1	ML7603285G1	—	. . CHASSIS	1	
–2	ML7407643G1	—	. . COVER	1	
–3	A7009936	—	. . SCREW, thumb (Att. Pt.)	4	
–4	TS102U02	—	. . SHIELD, tube	1	
–5	6AH6	V21301	. . TUBE, electron	1	
–6	TS102U01	—	. . SHIELD, tube	2	
–7	5726/6AL5W	V21302	. . TUBE, electron	1	
–8	5725/6AS6W	V21304	. . TUBE, electron	1	
–9	TS102P01	XV21301	. . SOCKET, tube	1	
–10	TS102P01	XV21302	. . SOCKET, tube	1	
–11	TS102P01	XV21304	. . SOCKET, tube	1	
–12	AN515–4R4	—	. . SCREW, mach: Phillips drive; RH; steel, cad pl; No. 4–40; 1/4 in lg (Att. Pt. for items 9, 10 and 11)	6	
–13	AN936B4B	—	. . WASHER, lock: bronze, tinned; round, No. 4; shakeproof-type, tw ext teeth (Att. Pt. for items 9, 10 and 11)	6	
–14	1060	—	. . NUT, anchor (Att. Pt. for items 9, 10 and 11) (Cinch)	3	
–15	TS103U02	—	. . SHIELD, tube	1	
–16	12AX7	V21303	. . TUBE, electron	1	
–17	TS103P01	XV21303	. . SOCKET, tube	1	
–18	AN515–4R4	—	. . SCREW, mach: Phillips drive; RH; steel, cad pl; No. 4–40; 1/4 in lg (Att. Pt.)	2	
–19	AN936B4B	—	. . WASHER, lock: bronze, tinned; round, No. 4; shakeproof-type, tw ext teeth (Att. Pt.)	2	

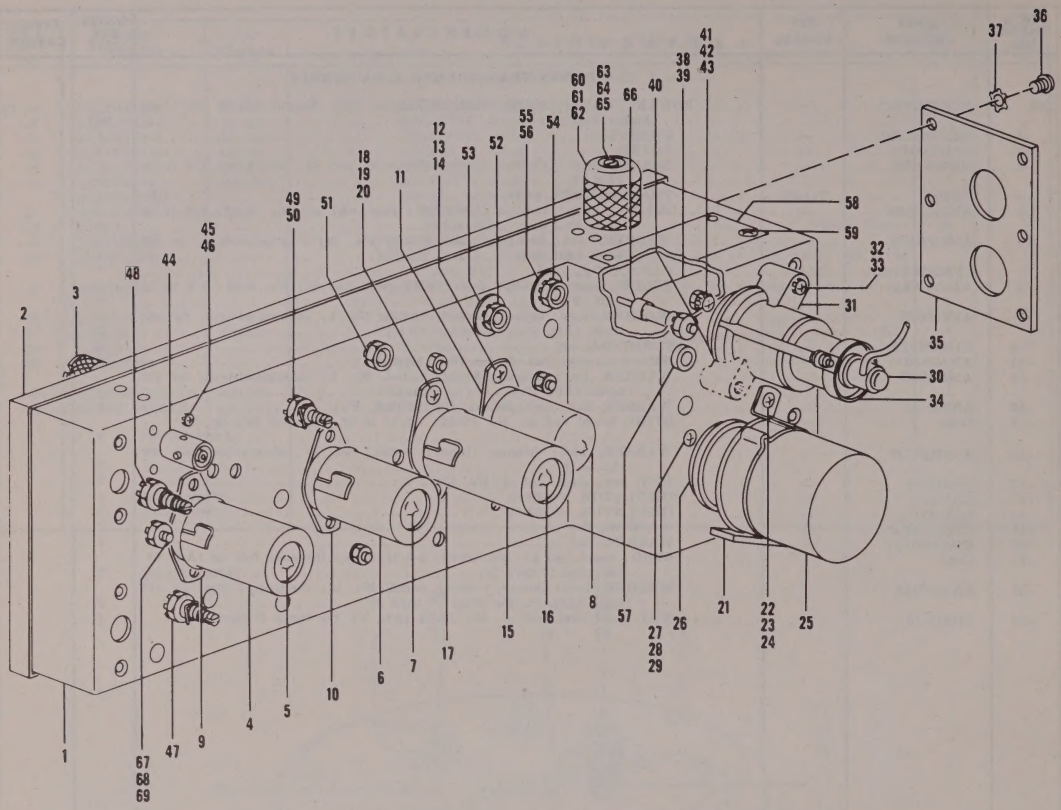

Figure 123. RF Oscillator O–166/CPS–6B, Front View (Sheet 1 of 3 sheets, Index Nos. 1 thru 69)

FIG. & INDEX NO.	PART NUMBER	REF SYMBOL	NOMENCLATURE 1 2 3 4 5 6 7	UNITS PER ASSY	APPLI-CATION
			RF OSCILLATOR O–166/CPS–6B (Cont)		
123–20	AN340–4	—	. . NUT, hex: steel, cad pl; No. 4–40 (Att. Pt.)	2	
–21	926D	—	. . CLAMP (Birtcher)	1	
–22	AN515–8R5	—	. . SCREW, mach: Phillips drive; RH; steel, cad pl; No. 8–32; 5/16 in lg (Att. Pt.)	1	
–23	AN936B8B	—	. . WASHER, lock: bronze, tinned; round, No. 8; shakeproof-type, tw ext teeth (Att. Pt.)	1	
–24	AN340–8	—	. . NUT, hex: steel, cad pl; No. 8–32 (Att. Pt.)	1	
–25	SK5123	K21301	. . RELAY, solenoid (Clare CP)	1	
–26	TS101P01	XK21301	. . SOCKET, tube	1	
–27	AN515–6R6	—	. . SCREW, mach: Phillips drive; RH; steel, cad pl; No. 6–32; 3/8 in lg (Att. Pt.)	2	
–28	AN936B6B	—	. . WASHER, lock: bronze, tinned; round, No. 6; shakeproof-type, tw ext teeth (Att. Pt.)	2	
–29	AN340–6	—	. . NUT, hex: steel, cad pl; No. 6–32 (Att. Pt.)	2	
–30	905L	—	. . CLIP (Alden)	1	

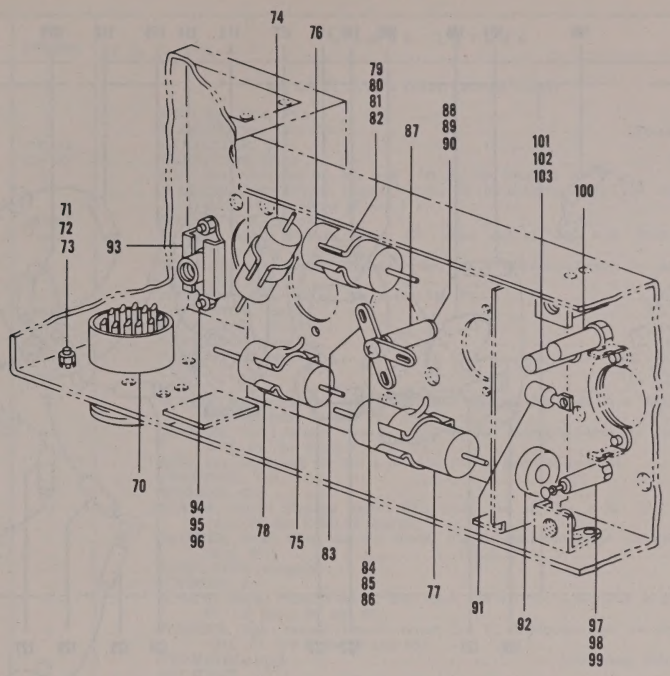

Figure 123. RF Oscillator O–166/CPS–6B, Partial Rear View (Sheet 2 of 3 sheets, Index Nos. 70 thru 103)

FIG. & INDEX NO.	PART NUMBER	REF SYMBOL	NOMENCLATURE 1 2 3 4 5 6 7	UNITS PER ASSY	APPLI-CATION
			RF OSCILLATOR O–166/CPS–6B (Cont)		
123–31	K7129462P1	—	. . CLAMP	2	
–32	AN515–4R12	—	. . SCREW, mach: Phillips drive; RH; steel, cad pl; No. 4–40; 3/4 in lg (Att. Pt.)	2	
–33	AN936B4B	—	. . WASHER, lock: bronze, tinned; round, No. 4; shakeproof-type, tw ext teeth (Att. Pt.)	2	
–34	726–C	V21305	. . TUBE, electron	1	
–35	A7010185P1	—	. . PLATE, mounting	1	
–36	AN515–4R5	—	. . SCREW, mach: Phillips drive; RH; steel, cad pl; No. 4–40; 5/16 in lg (Att. Pt.)	7	
–37	AN936B4B	—	. . WASHER, lock: bronze, tinned; round, No. 4; shakeproof-type, tw ext teeth (Att. Pt.)	7	
–38	UG355/U	E21301	. . CONNECTOR, adapter (Includes J21302 and J21303)	1	
–39	1928	—	. . WASHER, lock (Att. Pt.) (Shakeproof)	2	
–40	9932	XV21305	. . SOCKET, tube (Cinch)	1	
–41	AN515–6R4	—	. . SCREW, mach: Phillips drive; RH; steel, cad pl; No. 6–32; 1/4 in lg (Att. Pt.)	2	
–42	AN936B6B	—	. . WASHER, lock: bronze, tinned; round, No. 6; shakeproof-type, tw ext teeth (Att. Pt.)	2	
–43	AN340–6	—	. . NUT, hex: steel, cad pl; No. 6–32 (Att. Pt.)	2	
–44	UG290/U	J21301	. . CONNECTOR, receptacle	1	
–45	AN520–3R4	—	. . SCREW, mach: Phillips drive; RH; steel, cad pl; No. 3–56; 1/4 in lg (Att. Pt.)	4	
–46	1103	—	. . WASHER, lock (Att. Pt.) (Shakeproof)	4	
–47	ML7006629G1	L21301	. . COIL, RF	1	

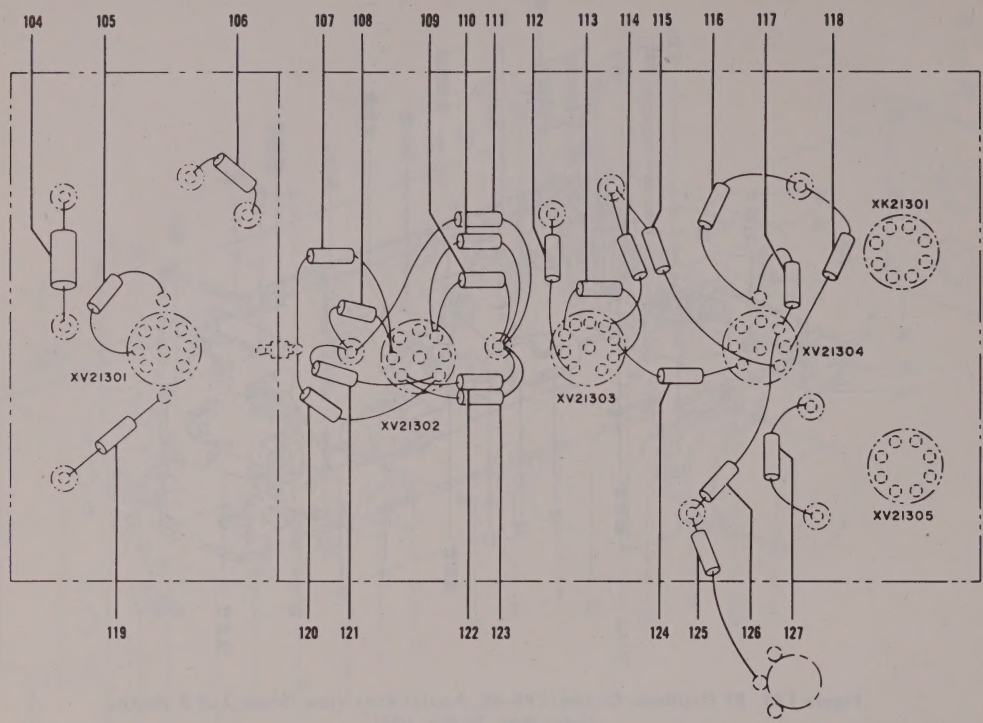

Figure 123. RF Oscillator O–166/CPS–6B, Rear View (Sheet 3 of 3 Sheets, Index Nos. 104 thru 127)

FIG. & INDEX NO.	PART NUMBER	REF SYMBOL	NOMENCLATURE 1 2 3 4 5 6 7	UNITS PER ASSY	APPLI-CATION
			RF OSCILLATOR O–166/CPS–6B (Cont)		
123–48	ML7407667G1	L21305	. . TRANSFORMER, variable RF	1	
–49	14238	L21303	. . COIL, inductor (Sickles FW)	1	
–50	AN936B416B	—	. . WASHER, lock: bronze, tinned; round, 1/4 in; shakeproof-type, tw ext teeth (Att. Pt. for items 47, 48 and 49)	3	
–51	D207	J21305	. . CONNECTOR, receptacle (IPC)	1	
–52	D207	J21306	. . CONNECTOR, receptacle (IPC)	1	
–53	A7012401P2	—	. . DISK, indicator	1	
–54	D207	J21307	. . CONNECTOR, receptacle (IPC)	1	
–55	A7012401P1	—	. . DISK, indicator	1	
–56	AN936B416B	—	. . WASHER, lock: bronze, tinned; round, 1/4 in; shakeproof-type, tw ext teeth (Att. Pt. for items 51 thru 55)	3	
–57	M2R53P1	—	. . GROMMET	1	
–58	NP157564B	—	. . PLATE, identification	1	
–59	Coml	—	. . SCREW, self-tapping: Phillips drive; RH; steel, cad pl; No. 4–40; 1/4 in lg (Att. Pt.) (Shakeproof)	4	
–60	M7481469P1	—	. . NUT, lock	1	
–61	10061	—	. . COLLET (Millen)	1	
–62	1920–2	—	. . WASHER, lock (Att. Pt.) (Shakeproof)	1	
–63	P7770835P33	R21320	. . RESISTOR, variable	1	

FIG. & INDEX NO.	PART NUMBER	REF SYMBOL	1 2 3 4 5 6 7 NOMENCLATURE	UNITS PER ASSY	APPLI-CATION
			RF OSCILLATOR O–166/CPS–6B (Cont)		
123–64	K7870535P2	—	. . NUT, hex (Att. Pt.)	1	
–65	1920–2	—	. . WASHER, lock (Att. Pt.) (Shakeproof)	1	
–66	324–04H1–K	C21313	. . CAPACITOR, fixed (Erie)	1	
–67	324–04H1–K	C21302	. . CAPACITOR, fixed (Erie)	1	
–68	AN340–6	—	. . NUT, hex: steel, cad pl; No. 6–32 (Att. Pt. for items 66 and 67)	2	
–69	AN936B6B	—	. . WASHER, lock: bronze, tinned; round, No. 6; shakeproof-type, tw ext teeth (Att. Pt. for items 66 and 67)	2	
–70	AN3102–22–19P	J21304	. . CONNECTOR, receptacle	1	
–71	AN515–4R5	—	. . SCREW, mach: Phillips drive; RH; steel, cad pl; No. 4–40; 5/16 in lg (Att. Pt.)	4	
–72	AN936B4B	—	. . WASHER, lock: bronze, tinned; round, No. 4; shakeproof-type, tw ext teeth (Att. Pt.)	4	
–73	AN340–4	—	. . NUT, hex: steel, cad pl; No. 4–40 (Att. Pt.)	4	
–74	CP26A1EF103V	C21311	. . CAPACITOR, fixed	1	
–75	CP26A1EF103V	C21310	. . CAPACITOR, fixed	1	
–76	CP26A1EF503K	C21309	. . CAPACITOR, fixed	1	
–77	CP26A1EF104K	C21314	. . CAPACITOR, fixed	1	
–78	TH15	—	. . CLIP (Mallory)	2	
–79	TH17	—	. . CLIP (Mallory)	2	
–80	AN515–4R4	—	. . SCREW, mach: Phillips drive; RH; steel, cad pl; No. 4–40; 1/4 in lg (Att. Pt. for items 78 and 79)	4	
–81	AN936B4B	—	. . WASHER, lock: bronze, tinned; round, No. 4; shakeproof-type, tw ext teeth (Att. Pt. for items 78 and 79)	4	
–82	AN340–4	—	. . NUT, hex: steel, cad pl; No. 4–40 (Att. Pt. for items 78 and 79)	4	
–83	A7135118P2	—	. . TERMINAL, lug	3	
–84	K7872455P1	—	. . WASHER, flat	1	
–85	AN515–6R5	—	. . SCREW, mach: Phillips drive; RH; steel, cad pl; No. 6–32; 5/16 in lg (Att. Pt. for items 83 and 84)	1	
–86	AN936B6	—	. . WASHER, lock: steel, cad pl; round, No. 6; shakeproof-type, tw ext teeth (Att. Pt.)	1	
–87	M7462416P1	—	. . INSULATOR, standoff	1	
–88	K7872445P1	—	. . WASHER, flat	1	
–89	AN515–6R5	—	. . SCREW, mach: Phillips drive; RH; steel, cad pl; No. 6–32; 5/16 in lg (Att. Pt. for items 87 and 88)	1	
–90	AN939B6B	—	. . WASHER, lock: bronze, tinned; round, No. 6; shakeproof-type, tw ext teeth (Att. Pt. for items 87 and 88)	1	
–91	BC–80W–PP	—	. . TERMINAL, stud (Electrical Industries)	1	
–92	M2R53P3	—	. . GROMMET	1	
–93	A7010681P1	—	. . NUT, anchor	4	
–94	AN505–4R5	—	. . SCREW, mach: Phillips drive; FH; steel, cad pl; No. 4–40; 5/16 in lg (Att. Pt.)	8	
–95	AN936B4B	—	. . WASHER, lock: bronze, tinned; round, No. 4; shakeproof-type, tw ext teeth (Att. Pt.)	8	
–96	AN340–4	—	. . NUT, hex: steel, cad pl; No. 4–40 (Att. Pt.)	8	
–97	780	—	. . TERMINAL, stud (Winchester Electronics)	10	
–98	AN515–6R4	—	. . SCREW, mach: Phillips drive; RH; steel, cad pl; No. 6; 1/4 in lg (Att. Pt.)	10	
–99	AN936B6B	—	. . WASHER, lock: bronze, tinned; round, No. 6; shakeproof-type, tw ext teeth (Att. Pt.)	10	
–100	2336	C21303	. . CAPACITOR, fixed (Erie)	1	
–101	2336	C21304	. . CAPACITOR, fixed (Erie)	1	
–102	AN515–4R3	—	. . SCREW, mach: Phillips drive; RH; steel, cad pl; No. 4–40; 3/16 in lg (Att. Pt. for items 100 and 101)	2	
–103	AN936B4B	—	. . WASHER, lock: bronze, tinned; round, No. 4; shakeproof-type, tw ext teeth (Att. Pt. for items 100 and 101)	2	
–104	ML7406581G1	L21304	. . COIL, RF	1	
–105	RC20BF680J	R21317	. . RESISTOR, fixed	1	
–106	RC20BF221J	R21302	. . RESISTOR, fixed	1	
–107	CC21CJ100C	C21306	. . CAPACITOR, fixed	1	
–108	RC20BF334J	R21304	. . RESISTOR, fixed	1	
–109	RC20BF104J	R21305	. . RESISTOR, fixed	1	
–110	CM20C330J	C21307	. . CAPACITOR, fixed	1	
–111	ML7406581G1	L21302	. . COIL, RF	1	
–112	RC20BF223J	R21307	. . RESISTOR, fixed	1	
–113	RC20BF681J	R21308	. . RESISTOR, fixed	1	
–114	RC20BF685J	R21309	. . RESISTOR, fixed	1	
–115	RC20BF225J	R21314	. . RESISTOR, fixed	1	
–116	RC20BF103J	R21313	. . RESISTOR, fixed	1	
–117	RC20BF105J	R21311	. . RESISTOR, fixed	1	
–118	RC20BF105J	R21312	. . RESISTOR, fixed	1	
–119	CM20C270J	C21301	. . CAPACITOR, fixed	1	
–120	CC21CK050C	C21305	. . CAPACITOR, fixed	1	
–121	RC20BF334J	R21303	. . RESISTOR, fixed	1	
–122	CM20B100K	C21308	. . CAPACITOR, fixed	1	
–123	RC20BF104J	R21306	. . RESISTOR, fixed	1	
–124	RC20BF225J	R21310	. . RESISTOR, fixed	1	
–125	RC20BF105J	R21319	. . RESISTOR, fixed	1	
–126	RC20BF225J	R21318	. . RESISTOR, fixed	1	
–127	RC20BF471J	R21316	. . RESISTOR, fixed	1	

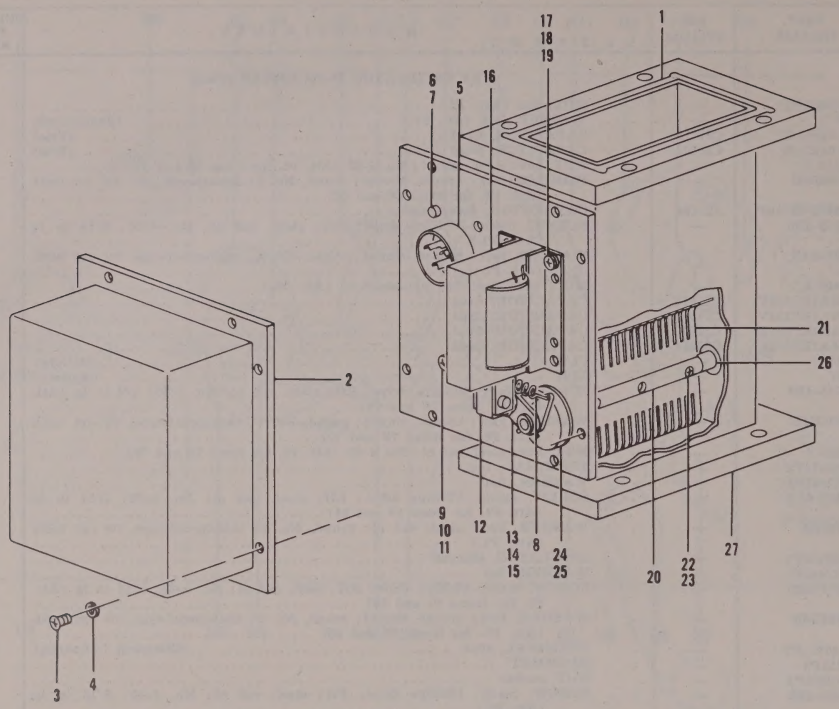

Figure 124. Shutter Wave Guide SA–320/CPS–6B

FIG. & INDEX NO.	PART NUMBER	REF SYMBOL	1 2 3 4 5 6 7 NOMENCLATURE	UNITS PER ASSY	APPLI-CATION
			SHUTTER WAVE GUIDE SA–320/CPS–6B		
124–	C1912–110B	E21004	. SHUTTER WAVE GUIDE SA–320/CPS–6B (See Figure 101–151 for next higher assembly) ..... (Terpening)	Ref	
–1	A1056–89	—	. . GASKET ..... (Terpening)	2	
–2	A1912–107	—	. . COVER ..... (Terpening)	1	
–3	Coml	—	. . SCREW, mach: Phillips drive; Fil H; steel, cad pl; No. 4–40; 1/4 in lg (Att. Pt.) ..... (Amer Screw)	8	
–4	AN935–4L	—	. . WASHER, lock: steel, cad pl; No. 4 (Att. Pt.)	8	
–5	AN3102–16–10P	J21011	. . CONNECTOR, receptacle	1	
–6	Coml	—	. . SCREW, mach: Phillips drive; Fil H; steel, cad pl; No. 4–40; 1/4 in lg (Att. Pt.) ..... (Amer Screw)	4	
–7	AN935–4L	—	. . WASHER, lock: steel, cad pl; No. 4 (Att. Pt.)	4	
–8	A1509–21	—	. . SPRING ..... (Terpening)	1	
–9	AN515–6R4	—	. . SCREW, mach: Phillips drive; RH; steel, cad pl; No. 6–32; 1/4 in lg (Att. Pt.)	1	
–10	AN936B6B	—	. . WASHER, lock: bronze, tinned; round, No. 6; shakeproof-type, tw ext teeth (Att. Pt.)	1	
–11	Coml	—	. . WASHER, flat: brass, cad pl; 0.147 in ID, 5/16 in OD, 0.028 in thk (Att. Pt.) ..... (Wrought Washer)	1	
–12	A1509–102	—	. . ARMATURE, relay ..... (Terpening)	1	
–13	A1509–104	—	. . ARM ..... (Terpening)	1	
–14	AN385A70–3	—	. . PIN, taper: SS; 7/0; 3/8 in lg (Att. Pt.)	1	

FIG. & INDEX NO.	PART NUMBER	REF SYMBOL	1 2 3 4 5 6 7 NOMENCLATURE	UNITS PER ASSY	APPLI-CATION
			SHUTTER WAVEGUIDE SA–320/CPS–6B (Cont)		
124–15	Coml	—	. . SCREW, set: Bristo-six spline drive; headless; steel, cad pl; No. 4–40; 1/8 in lg; cup point (Att. Pt.) .....(Bristolco)	1	
–16	A1509–15	K21001	. . SOLENOID ..... (Terpening)	1	
–17	Coml	—	. . SCREW, mach: Phillips drive; Fil H; steel, cad pl; No. 6–32; 5/16 in lg (Att. Pt.) .....(Amer Screw)	4	
–18	AN935–6L	—	. . WASHER, lock: steel, cad pl; No. 6 (Att. Pt.)	4	
–19	Coml	—	. . WASHER, flat: brass, cad pl; 0.147 in ID, 5/16 in OD, 0.028 in thk (Att. Pt.) .....(Wrought Washer)	4	
–20	A1334–10	—	. . PLATE, retainer .....(Terpening)	1	
–21	A1334–45	—	. . SHUTTER, wave guide .....(Terpening)	1	
–22	Coml	—	. . SCREW, mach: Phillips drive; Fil H; steel, cad pl; No. 4–40; 3/16 in lg (Att. Pt. for items 20 and 21) .....(Amer Screw)	3	
–23	AN935–4L	—	. . WASHER, lock: steel, cad pl; No. 4 (Att. Pt. for items 20 and 21)	3	
–24	A1509–25	—	. . COLLAR, shaft .....(Terpening)	1	
–25	Coml	—	. . SCREW, set: Bristo-six spline drive; headless; No. 4–40; 1/8 in lg; cup point (Att. Pt.) .....(Bristolco)	1	
–26	A1334–9	—	. . SHAFT ..... (Terpening)	1	
–27	C1912–108A	—	. . WAVE GUIDE SECTION .....(Terpening)	1	

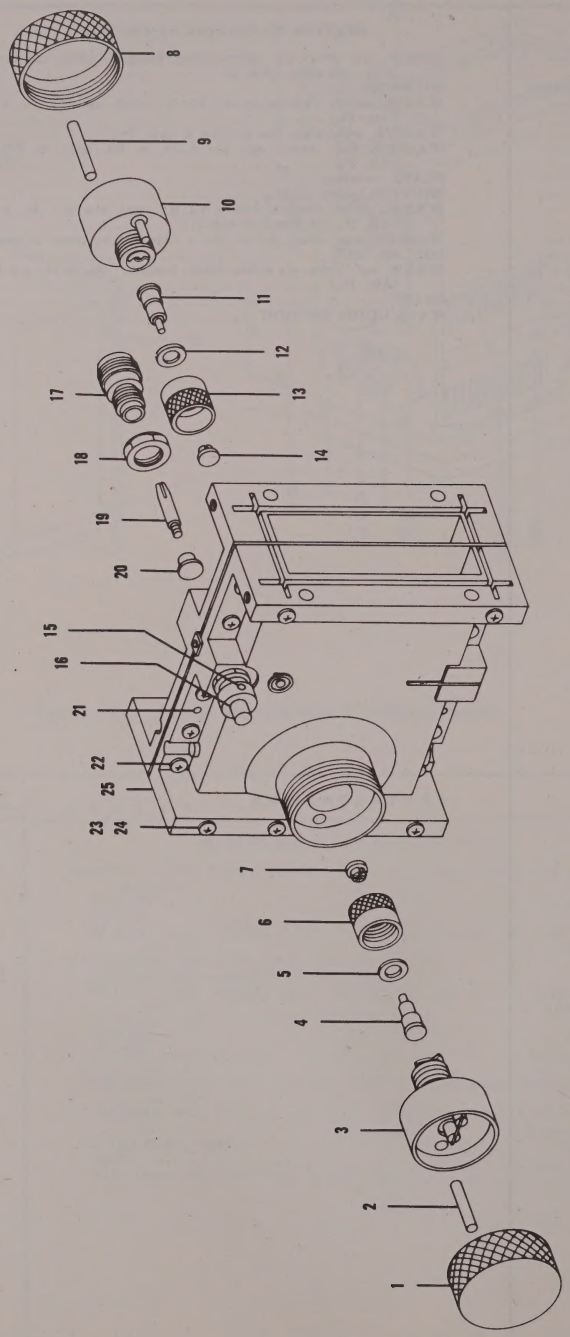

Figure 125. Frequency Mixer Stage CV–218/CPS–6B

FIG. & INDEX NO.	PART NUMBER	REF SYMBOL	NOMENCLATURE 1 2 3 4 5 6 7	UNITS PER ASSY	APPLI-CATION
			FREQUENCY MIXER STAGE CV–218/CPS–6B		
125–	ML7603811G1	—	. FREQUENCY MIXER STAGE CV–218/CPS–6B (See Figure 101–164 for next higher assembly)	Ref	
–1	A7009750P1	—	. . CAP	1	
–2	A7009746P1	—	. . PIN, locating	1	
–3	No Number	—	. . CARRIER, crystal (B7407472P1, K7894294P1, A7009748P1, A7009753P1, A7009752P1, A7009754P1, A7009745P1, A7009749P1 and D7603811P37, assembled)	1	
–4	1N21C	CR21501	. . CRYSTAL BLANK, quartz	1	
–5	A7009756P1	—	. . WASHER, flat	1	
–6	A7009751P1	—	. . HOLDER, crystal	1	
–7	A7009755P1	—	. . HOLDER, crystal	1	
–8	A7009750P1	—	. . CAP	1	
–9	A7009746P1	—	. . PIN, locating	1	
–10	No Number	—	. . CARRIER, crystal (K7407472P1, K789429P1, A7009748P1, A7009753P1, A7009752P1, A7009754P1, A7009745P1, A7009749P1 and D7603811P37, assembled)	1	
–11	1N21C	CR21502	. . CRYSTAL BLANK, quartz	1	
–12	A7009756P1	—	. . WASHER, flat	1	
–13	A7009751P1	—	. . HOLDER, crystal	1	
–14	A7009755P1	—	. . HOLDER, crystal	1	
–15	K7877148P1	—	. . SCREW, set	1	
–16	No Number	—	. . ROD (A7009761P1, E7870535P1 and ML7009771G1 assembled)	1	
–17	A7009759P1	—	. . BUSHING	1	
–18	A7019025P1	—	. . NUT, hex	1	
–19	A7009760P1	—	. . CONTACT, electrical	1	
–20	A7009762P1	—	. . ATTENUATOR, fixed	1	
–21	A7009758P1	—	. . PIN, locating	2	
–22	AN515–8R8	—	. . SCREW, mach: Phillips drive; RH; steel, cad pl; No. 8–32; 1/2 in lg	10	
–23	AN515–8R28	—	. . SCREW, mach: Phillips drive; RH; steel, cad pl; No. 8–32; 1-3/4 in lg	6	
–24	AN936A8B	—	. . WASHER, lock: bronze, tinned; round, No. 8; shakeproof-type, tw int teeth	16	
–25	No Number	—	. . MIXER SUBASSEMBLY, stage (C21543, J21506, R21522, A7009768P1, A7009739P1, ML7704071G1, ML7009740G1, ML7009767G1 and D7603811P35, assembled)	1	
			IF AMPLIFIER AM–623/CPS–6B		
126–	PL7705989G1	—	. IF AMPLIFIER AM–623/CPS–6B (See Figure 101–167 for next higher assembly)	Ref	
–1	PL7407983G1	—	. . COVER	1	
–2	AN515–8R8	—	. . SCREW, mach: Phillips drive; RH; steel, cad pl; No. 8–32; 1/2 in lg (Att. Pt.)	4	
–3	AN936B8B	—	. . WASHER, lock: bronze, tinned; round, No. 8; shakeproof-type, tw ext teeth (Att. Pt.)	4	
–4	No Number	—	. . CHASSIS (K7005409P1, PL7705086G1, C7705989P38 and P62, assembled)	1	
–5	TS103U01	—	. . SHIELD, tube	1	
–6	12AT7	V21506	. . TUBE, electron	1	
–7	A7010584P4	—	. . SHIELD, tube	5	
–8	5654/6AK5W	V21505	. . TUBE, electron	1	
–9	5654/6AK5W	V21503	. . TUBE, electron	1	
–10	5654/6AK5W	V21504	. . TUBE, electron	1	
–11	5842	V21502	. . TUBE, electron	1	
–12	5847	V21501	. . TUBE, electron	1	
–13	K7126393P1	E21504	. . CONNECTOR, plug (Includes RC20BF680J)	1	
–14	AN3102A–16S1P	J21501	. . CONNECTOR, receptacle	1	
–15	AN515–4R5	—	. . SCREW, mach: Phillips drive; RH; steel, cad pl; No. 4–40; 5/16 in lg (Att. Pt. for items 13 and 14)	4	
–16	AN936B4B	—	. . WASHER, lock: bronze, tinned; round, No. 4; shakeproof-type, tw ext teeth (Att. Pt. for items 13 and 14)	4	
–17	AN340–4	—	. . NUT, hex: steel, cad pl; No. 4–40 (Att. Pt. for items 13 and 14)	4	
–18	UG290/U	J21505	. . CONNECTOR, receptacle	1	
–19	UG290/U	J21502	. . CONNECTOR, receptacle	1	
–20	AN520–3R4	—	. . SCREW, mach: Phillips drive; RH; steel, cad pl; No. 3–56; 1/4 in lg (Att. Pt. for items 18 and 19)	8	

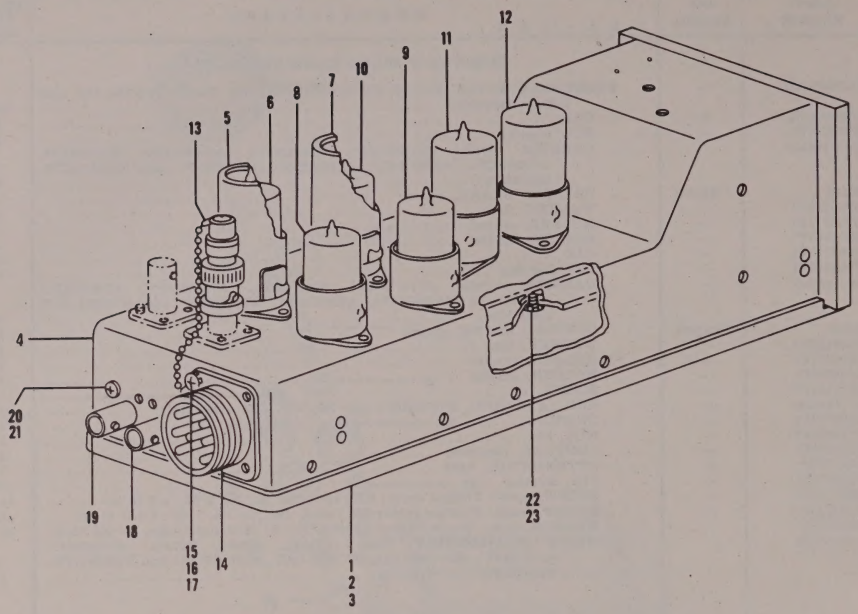

Figure 126. IF Amplifier AM–623/CPS–6B, Front View (Sheet 1 of 3 sheets, Index Nos. 1 thru 23)

FIG. & INDEX NO.	PART NUMBER	REF SYMBOL	NOMENCLATURE (1 2 3 4 5 6 7)	UNITS PER ASSY	APPLI-CATION
			IF AMPLIFIER AM–623/CPS–6B (Cont)		
126–21	AN936A3B	—	. . WASHER, lock: bronze, tinned; round, No. 3; shakeproof-type, tw int teeth (Att. Pt. for items 18 and 19)	8	
	PL7409553G1	—	. . CAPACITOR-RESISTOR-COIL SUBASSEMBLY	1	
–22	AN515–6R4	—	. . SCREW, mach: Phillips drive; RH; steel, cad pl; No. 6–32; 1/4 in lg (Att. Pt.)	3	
–23	AN936B6B	—	. . WASHER, lock: bronze, tinned; round, No. 6; shakeproof-type, tw ext teeth (Att. Pt.)	3	
–24	K7128908P2	C21535	. . . CAPACITOR, fixed	1	
–25	RC20BF680J	R21518	. . . RESISTOR, fixed	1	
–26	K7128908P2	C21534	. . . CAPACITOR, fixed	1	
–27	RC20BF222J	R21516	. . . RESISTOR, fixed	1	
–28	K7128908P2	C21533	. . . CAPACITOR, fixed	1	
–29	RC20BF680J	R21515	. . . RESISTOR, fixed	1	
–30	K7128908P2	C21531	. . . CAPACITOR, fixed	1	
–31	P7702920P22	C21529	. . . CAPACITOR, fixed	1	
–32	RC20BF222J	R21511	. . . RESISTOR, fixed	1	
–33	RC20BF221J	R21513	. . . RESISTOR, fixed	1	
–34	K7128908P2	C21521	. . . CAPACITOR, fixed	1	
–35	K7128908P2	C21524	. . . CAPACITOR, fixed	1	
–36	RC20BF221J	R21506	. . . RESISTOR, fixed	1	
–37	RC20BF103J	R21510	. . . RESISTOR, fixed	1	
–38	PL7019482G1	L21513	. . . COIL, RF	1	
–39	K7128908P2	C21520	. . . CAPACITOR, fixed	1	
–40	P7702920P22	C21518	. . . CAPACITOR, fixed	1	
–41	RC20BF101J	R21507	. . . RESISTOR, fixed	1	
–42	K7128908P2	C21517	. . . CAPACITOR, fixed	1	
–43	RC20BF680J	R21504	. . . RESISTOR, fixed	1	

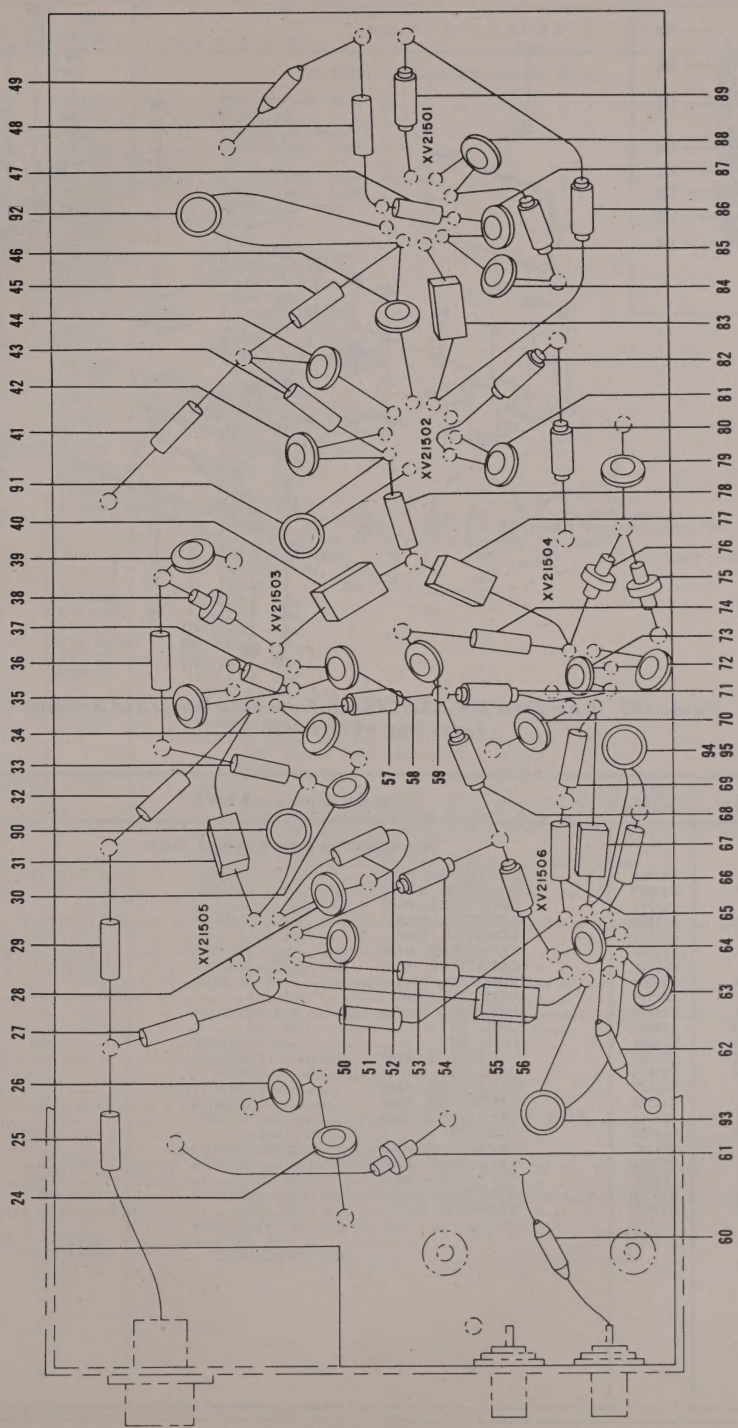

Figure 126. IF Amplifier AM–623/CPS–6B, Bottom View (Sheet 2 of 3 sheets, Index Nos. 24 thru 95)

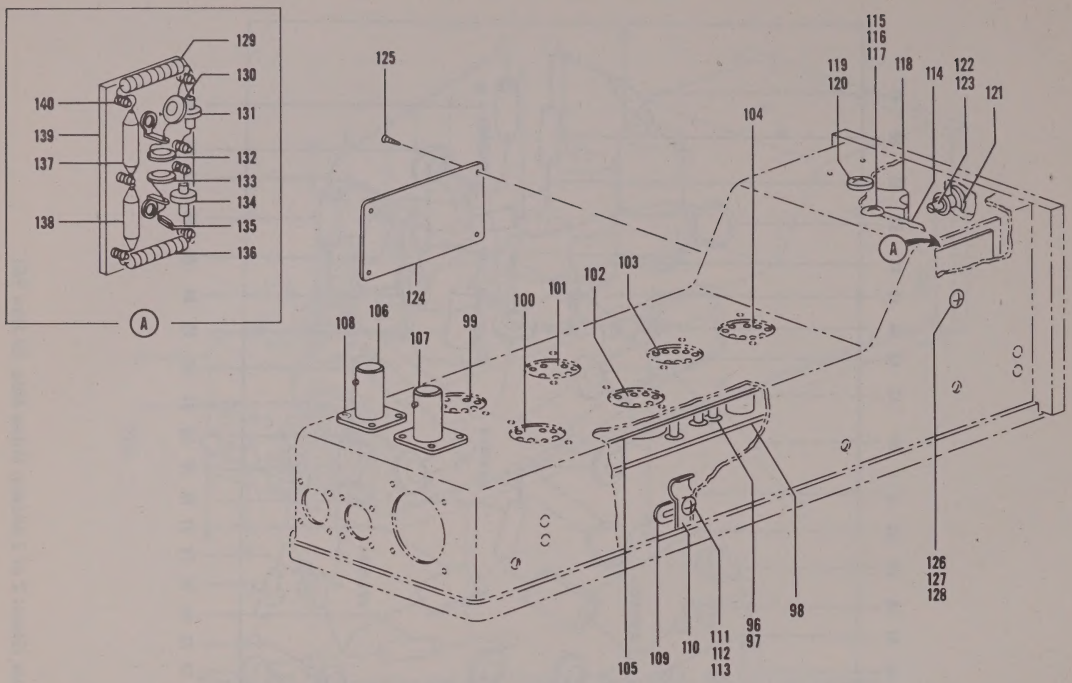

Figure 126. IF Amplifier AM–623/CPS–6B, Front View (Sheet 3 of 3 sheets, Index Nos. 96 thru 140)

FIG. & INDEX NO.	PART NUMBER	REF SYMBOL	1 2 3 4 5 6 7 NOMENCLATURE	UNITS PER ASSY	APPLI-CATION
			IF AMPLIFIER AM–623/CPS–6B (Cont)		
126–44	K7128908P2	C21513	. . . CAPACITOR, fixed	1	
–45	RC20BF680J	R21503	. . . RESISTOR, fixed	1	
–46	K7128908P2	C21512	. . . CAPACITOR, fixed	1	
–47	RC20BF151J	R21502	. . . RESISTOR, fixed	1	
–48	RC20BF330J	R21501	. . . RESISTOR, fixed	1	
–49	K7115115P2	C21508	. . . CAPACITOR, fixed	1	
–50	K7128908P2	C21532	. . . CAPACITOR, fixed	1	
–51	RC20BF680J	R21521	. . . RESISTOR, fixed	1	
–52	RC20BF103J	R21517	. . . RESISTOR, fixed	1	
–53	RC20BF331J	R21519	. . . RESISTOR, fixed	1	
–54	PL7019484G5	L21517	. . . COIL, RF	1	
–55	PL7019484G5	L21522	. . . COIL, RF	1	
–56	P7702920P22	C21536	. . . CAPACITOR, fixed	1	
–57	PL7019484G5	L21514	. . . COIL, RF	1	
–58	K7128908P2	C21522	. . . CAPACITOR, fixed	1	
–59	K7128908P2	C21523	. . . CAPACITOR, fixed	1	
–60	K7115115P2	C21541	. . . CAPACITOR, fixed	1	
–61	PL7019482G1	L21520	. . . COIL, RF	1	
–62	K7115115P2	C21542	. . . CAPACITOR, fixed	1	
–63	K7128908P2	C21539	. . . CAPACITOR, fixed	1	
–64	K7128908P2	C21538	. . . CAPACITOR, fixed	1	
–65	RC20BF221J	R21512	. . . RESISTOR, fixed	1	
–66	RC20BF331J	R21520	. . . RESISTOR, fixed	1	

FIG. & INDEX NO.	PART NUMBER	REF SYMBOL	NOMENCLATURE 1 2 3 4 5 6 7	UNITS PER ASSY	APPLI-CATION
			IF AMPLIFIER AM–623/CPS–6B (Cont)		
126–67	P7702920P22	C21540	. . . CAPACITOR, fixed	1	
–68	PL7019479G1	L21518	. . . COIL, RF	1	
–69	RC20BF392J	R21509	. . . RESISTOR, fixed	1	
–70	K7128908P2	C21528	. . . CAPACITOR, fixed	1	
–71	PL7019484G5	L21515	. . . COIL, RF	1	
–72	K7128908P2	C21526	. . . CAPACITOR, fixed	1	
–73	K7128908P2	C21527	. . . CAPACITOR, fixed	1	
–74	RC20BF103J	R21508	. . . RESISTOR, fixed	1	
–75	PL7019482G1	L21519	. . . COIL, RF	1	
–76	PL7019482G1	L21512	. . . COIL, RF	1	
–77	P7702920P22	C21519	. . . CAPACITOR, fixed	1	
–78	RC20BF222J	R21505	. . . RESISTOR, fixed	1	
–79	K7128908P2	C21525	. . . CAPACITOR, fixed	1	
–80	PL7019479G1	L21511	. . . COIL, RF	1	
–81	K7128908P2	C21515	. . . CAPACITOR, fixed	1	
–82	PL7019484G5	L21509	. . . COIL, RF	1	
–83	P7702920P22	C21511	. . . CAPACITOR, fixed	1	
–84	K7128908P2	C21514	. . . CAPACITOR, fixed	1	
–85	PL7019484G5	L21507	. . . COIL, RF	1	
–86	PL7019483G1	L21506	. . . COIL, RF	1	
–87	K7128908P2	C21510	. . . CAPACITOR, fixed	1	
–88	K7128908P2	C21509	. . . CAPACITOR, fixed	1	
–89	PL7019481G1	L21505	. . . COIL, RF	1	
–90	PL7019480G2	L21516	. . . COIL, RF	1	
–91	PL7019480G4	L21510	. . . COIL, RF	1	
–92	PL7019480G2	L21508	. . . COIL, RF	1	
–93	PL7019480G2	L21521	. . . COIL, RF	1	
–94	PL7019480G2	L21523	. . . COIL, RF	1	
–95	AN936A416B	—	. . . WASHER, lock: bronze, tinned; round, 1/4 in; shakeproof-type, tw int teeth (Att. Pt. for items 90 thru 94)	5	
–96	R107–5	—	. . . TERMINAL, stud (Bead Chain)	85	
–97	K7103035P8	—	. . . EYELET	85	
–98	B7409553P2	—	. . . PANEL	1	
–99	M7406474P2	XV21506	. . SOCKET, tube	1	
–100	M7406473P2	XV21505	. . SOCKET, tube	1	
–101	M7406473P2	XV21504	. . SOCKET, tube	1	
–102	M7406473P2	XV21503	. . SOCKET, tube	1	
–103	M7406474P2	XV21502	. . SOCKET, tube	1	
–104	M7406474P2	XV21501	. . SOCKET, tube	1	
–105	B7408501	—	. . INSULATOR, plate	1	
–106	UG290/U	J21503	. . CONNECTOR, receptacle	1	
–107	UG290/U	J21504	. . CONNECTOR, receptacle	1	
–108	AN510–3R4	—	. . SCREW, mach: Phillips drive; FH; steel, cad pl; No. 3–56; 1/4 in lg (Att. Pt. for items 106 and 107)	8	
–109	K7878455P1	—	. . TERMINAL, lug	1	
–110	P7763541P2	—	. . CLAMP	3	
–111	AN515–8R6	—	. . SCREW, mach: Phillips drive; RH; steel, cad pl; No. 8–3; 3/8 in lg (Att. Pt. for items 109 and 110)	3	
–112	AN936B8B	—	. . WASHER, lock: bronze, tinned; round, No. 8; shakeproof-type, tw ext teeth (Att. Pt. for items 109 and 110)	4	
–113	AN340–8	—	. . NUT, hex: steel, cad pl; No. 8–32 (Att. Pt. for items 109 and 110)	3	
–114	K7878455P1	—	. . TERMINAL, lug	1	
–115	AN515–6R8	—	. . SCREW, mach: Philips drive; RH; steel, cad pl; No. 6–32; 1/2 in lg (Att. Pt.)	1	
–116	AN936B6B	—	. . WASHER, lock: bronze, tinned; round, No. 6; shakeproof-type, tw ext teeth (Att. Pt.)	1	
–117	AN340–6	—	. . NUT, hex: steel, cad pl; No. 6–32	1	
–118	PL7408553G1	T21501	. . TRANSFORMER, IF	1	
–119	AN515–8R8	—	. . SCREW, mach: Phillips drive; RH; steel, cad pl; No. 8–32; 1/2 in lg (Att. Pt.)	1	
–120	AN936B8B	—	. . WASHER, lock: bronze, tinned; round, No. 8; shakeproof-type, tw ext teeth (Att. Pt.)	1	
–121	A7009747	—	. . WASHER, flat	2	
	ML7010360G1	—	. . CONTACT, electrical	2	
–122	A7010360P1	—	. . . CONTACT, electrical	1	
–123	A7010361P1	—	. . . BUSHING	1	
–124	NP157557A	—	. . PLATE, identification	1	
–125	Coml	—	. . SCREW, self-tapping: Phillips drive; pan head; SS, tinned; No. 4–40; 1/4 in lg (Att. Pt.) (Shakeproof)	4	
	PL7014267G1	—	. . CAPACITOR-COIL SUBASSEMBLY	1	
–126	AN515–6R8	—	. . SCREW, mach: Phillips drive; RH; steel, cad pl; No. 6–32; 1/2 in lg (Att. Pt.)	2	
–127	AN936B6B	—	. . WASHER, lock: bronze, tinned; round, No. 6; shakeproof-type, tw ext teeth (Att. Pt.)	4	
–128	AN340–6	—	. . NUT, hex: steel, cad pl; No. 6–32 (Att. Pt.)	2	
–129	PL7411497G1	L21502	. . . COIL, RF	1	
–130	K7128908P2	C21505	. . . CAPACITOR, fixed	1	

FIG. & INDEX NO.	PART NUMBER	REF SYMBOL	NOMENCLATURE 1 2 3 4 5 6 7	UNITS PER ASSY	APPLI-CATION
			IF AMPLIFIER AM–623/CPS–6B (Cont)		
126–131	PL7019482G1	L21504	. . . COIL, RF	1	
–132	K7128908P2	C21507	. . . CAPACITOR, fixed	1	
–133	K7128908P2	C21506	. . . CAPACITOR, fixed	1	
–134	PL7019482G1	L21503	. . . COIL, RF	1	
–135	K7128908P2	C21504	. . . CAPACITOR, fixed	1	
–136	PL7411497G1	L21501	. . . COIL, RF	1	
–137	K7115115P2	C21502	. . . CAPACITOR, fixed	1	
–138	K7115115P2	C21501	. . . CAPACITOR, fixed	1	
	PL7014273G1	—	. . . BOARD, terminal	1	
–139	A7014273P1	—	. . . . PANEL	1	
–140	T100–3	—	. . . . TERMINAL, stud (Bead Chain)	9	
			FORK-BOOM		
127–	PL7706388G1	—	. FORK-BOOM (See Figure 101–194 for next higher assembly)	Ref	
–1	K7126123P2	—	. . SCREW, thumb	1	
	PL7021905G1	—	. . BLOCK, latch	1	
–2	A7021795P1	—	. . . KNOB	1	
–3	Coml	—	. . . SCREW, set: Bristo-four spline drive; headless; SS, zinc pl; No. 6–32; 1/8 in lg; cup point (Att. Pt.) (Bristolco)	2	
–4	A7021796P1	—	. . . RETAINER, spring	1	
–5	AN515–6R6	—	. . . SCREW, mach: Phillips drive; RH; steel, cad pl; No. 6–32; 3/8 in lg (Att. Pt.)	2	
–6	AN936A6B	—	. . . WASHER, lock: bronze, tinned; round, No. 6; shakeproof-type, tw int teeth (Att. Pt.)	2	
–7	A7021943	—	. . . SPRING	1	
–8	A7021798P2	—	. . . PIN, locking	1	
–9	A7021792P1	—	. . . BLOCK, alignment	1	
–10	6015–P	—	. . BEARING, ball (Norma-Hoff)	1	
–11	A7021799P1	—	. . SHAFT	1	
–12	C7706388P10	—	. . PIN, taper (Att. Pt.)	1	
	PL7021904G1	—	. . CLAMP	1	
–13	A7021795P1	—	. . . KNOB	1	
–14	Coml	—	. . . SCREW, set: Bristo-four spline drive; headless; SS, zinc pl; No. 6–32; 1/8 in lg; cup point (Att. Pt.) (Bristolco)	2	
–15	A7021794P1	—	. . . PLATE, retainer	1	
–16	AN515–6R5	—	. . . SCREW, mach: Phillips drive; RH; steel, cad pl; No. 6–32; 5/16 in lg (Att. Pt.)	4	
–17	AN936A6B	—	. . . WASHER, lock: bronze, tinned; round, No. 6; shakeproof-type, tw int teeth (Att. Pt.)	4	
–18	A7021943	—	. . . SPRING	1	
–19	A7021798P1	—	. . . PIN, locking	1	
	PL7021907G1	—	. . . BRACKET	1	
–20	AN520–10R7	—	. . . SCREW, mach: Phillips drive; RH; steel, cad pl; No. 10–32; 7/16 in lg (Att. Pt.)	2	
–21	AN936A10B	—	. . . WASHER, lock: bronze, tinned; round, No. 10; shakeproof-type, tw int teeth (Att. Pt.)	2	
–22	K7128235P2	—	. . . . BUSHING	1	
–23	A7021907P3	—	. . . . BRACKET	1	
	PL7409591G1	—	. . . CLAMP	1	
–24	B7409591P3	—	. . . . CLAMP	1	
–25	Coml	—	. . . . SCREW, mach: Allen drive; socket head; steel, cad pl; No. 10–32; 5/8 in lg (Att. Pt.) (Allen Mfg)	6	
–26	AN935–10	—	. . . . WASHER, lock: steel, cad pl; No. 10 (Att. Pt.)	6	
–27	M7469288P82	—	. . . . PIN, grooved (Att. Pt.)	2	
–28	B7409591P2	—	. . . BLOCK, bearing	1	
–29	A7021793P1	—	. . PLATE, base	1	
–30	AN520–10R10	—	. . SCREW, mach: Phillips drive; FH; steel, cad pl; No. 10–32; 5/8 in lg (Att. Pt.)	3	
–31	PL7409592G1	—	. . ARM	1	
–32	C7706388P11	—	. . PIN, taper (Att. Pt.)	2	
–33	A7021797P1	—	. . SHAFT	1	
–34	A7021900P1	—	. . SHAFT	1	
–35	6015–P	—	. . BEARING, ball (Norma-Hoff)	1	
–36	A7021791P	—	. . BRACKET	1	

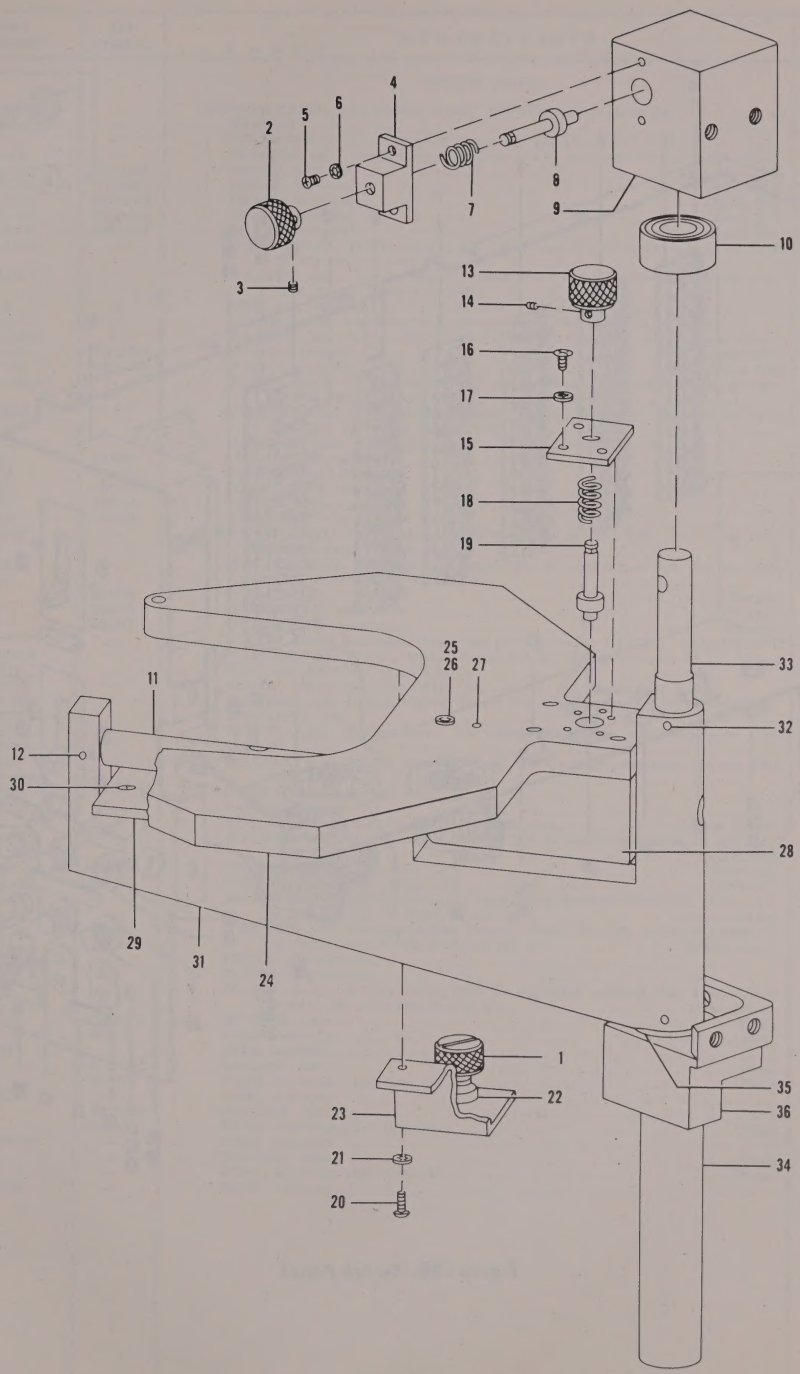

Figure 127. Fork-Boom

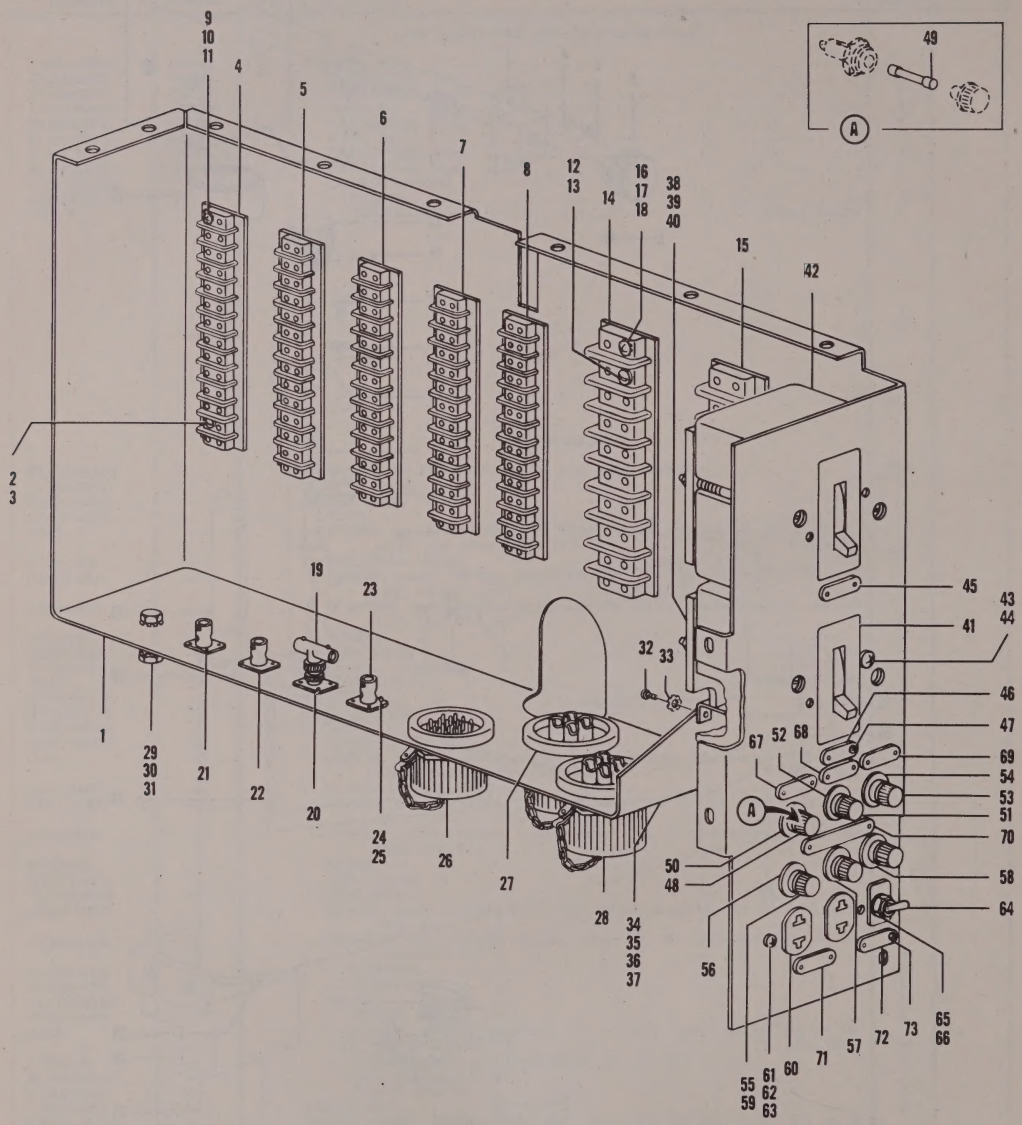

Figure 128. Switch Panel

FIG. & INDEX NO.	PART NUMBER	REF SYMBOL	1 2 3 4 5 6 7 NOMENCLATURE	UNITS PER ASSY	APPLI-CATION
			SWITCH PANEL		
128–	ML7603893G1	—	. SWITCH PANEL (See Figure 101–217 for next higher assembly)	Ref	
–1	PL7603894G1	—	. . CHASSIS	1	
–2	AN508–6–4	—	. . SCREW, mach: slot drive; RH; brass, tin pl; No. 6–32; 1/4 in lg	120	
–3	AN936A6B	—	. . WASHER, lock: bronze, tinned; round, No. 6; shakeproof-type, tw int teeth	120	
–4	MSX–12–141	TB21001	. . BOARD, terminal (Jones HB)	1	
–5	MSX–12–141	TB21002	. . BOARD, terminal (Jones HB)	1	
–6	MSX–12–141	TB21003	. . BOARD, terminal (Jones HB)	1	
–7	MSX–12–141	TB21004	. . BOARD, terminal (Jones HB)	1	
–8	MSX–12–141	TB21005	. . BOARD, terminal (Jones HB)	1	
–9	AN515–6R10	—	. . SCREW, mach: Phillips drive; RH; steel, cad pl; No. 6–32; 5/8 in lg (Att. Pt. for items 4 thru 8)	20	
–10	AN936B6B	—	. . WASHER, lock: bronze, tinned; round, No. 6; shakeproof-type, tw ext teeth (Att. Pt. for items 4 thru 8)	20	
–11	AN340–6	—	. . NUT, hex: steel, cad pl; No. 6–32 (Att. Pt. for items 4 thru 8)	20	
–12	AN508–8–5	—	. . SCREW, mach: slot drive; RH; brass, tin pl; No. 10–32; 5/16 in lg	32	
–13	AN936A10B	—	. . WASHER, lock: bronze, tinned; round, No. 10; shakeproof-type, tw int teeth	32	
–14	MSX–8–150	TB21006	. . BOARD, terminal (Jones HB)	1	
–15	MSX–8–150	TB21007	. . BOARD, terminal (Jones HB)	1	
–16	AN520–10R12	—	. . SCREW, mach: Phillips drive; RH; steel, cad pl; No. 10–32; 3/4 in lg (Att. Pt. for items 14 and 15)	8	
–17	AN936B10B	—	. . WASHER, lock: bronze, tinned; round, No. 10; shakeproof-type, tw ext teeth (Att. Pt. for items 14 and 15)	8	
–18	AN345–10	—	. . NUT, hex: steel, cad pl; No. 10–32 (Att. Pt. for items 14 and 15)	8	
–19	UG274/U	E21005	. . CONNECTOR, adapter	1	
–20	UG414/U	J21005	. . CONNECTOR, receptacle	1	
–21	UG414/U	J21007	. . CONNECTOR, receptacle	1	
–22	UG414/U	J21006	. . CONNECTOR, receptacle	1	
–23	UG414/U	J21004	. . CONNECTOR, receptacle	1	
–24	AN520–3R5	—	. . SCREW, mach: Phillips drive; RH; steel, cad pl; No. 3–56; 5/16 in lg (Att. Pt. for items 20 thru 23)	16	
–25	AN936A3	—	. . WASHER, lock: steel, cad pl; round, No. 3; shakeproof-type, tw int teeth (Att. Pt. for items 20 thru 23)	16	
–26	C1145	J21003	. . CONNECTOR, receptacle (Buggie)	1	
–27	C1130	J21002	. . CONNECTOR, receptacle (Buggie)	1	
–28	C1130	J21001	. . CONNECTOR, receptacle (Buggie)	1	
–29	Coml	—	. . SCREW, mach: hex head; brass, cad pl; 3/8 in–16; 1 in lg (Amer Screw)	1	
–30	AN936B616B	—	. . WASHER, lock: bronze, tinned; round, 3/8 in; shakeproof-type, tw ext teeth	8	
–31	AN340–616	—	. . NUT, hex: steel, cad pl; 3/8 in–16	2	
–32	AN508–10–5	—	. . SCREW, mach: slot drive; RH; brass, tin pl; No. 10–32; 5/16 in lg	12	
–33	AN936B10B	—	. . WASHER, lock: bronze, tinned; round, No. 10; shakeproof-type, tw ext teeth	12	
–34	A7012397P1	—	. . TERMINAL, lug	12	
–35	AN515–6R12	—	. . SCREW, mach: Phillips drive; RH; steel, cad pl; No. 6–32; 3/4 in lg (Att. Pt.)	12	
–36	AN936B6B	—	. . WASHER, lock: bronze, tinned; round, No. 6; shakeproof-type, tw ext teeth (Att. Pt.)	12	
–37	A7019006P1	—	. . INSERT, threaded (Att. Pt.)	12	
–38	A7009571P1	—	. . PANEL	2	
–39	Coml	—	. . NUT, hex: brass, cad pl; No. 12–24 (Att. Pt.) (Amer Screw)	4	
–40	Coml	—	. . WASHER, lock: bronze, cad pl; round, No. 12; shakeproof-type, tw ext teeth (Att. Pt.) (Shakeproof)	4	
–41	K173A–20	S21002	. . CIRCUIT BREAKER: style "A" (Trumbull)	1	
–42	K173A–15	S21001	. . CIRCUIT BREAKER: style "A" (Trumbull)	1	
–43	Coml	—	. . SCREW, mach: Phillips drive; pan head; steel, oxidized brass; No. 12–24; 7/16 in lg (Att. Pt. for items 41 and 42) (Amer Screw)	4	
–44	Coml	—	. . WASHER, lock: bronze, oxidized bronze; round, No. 12; shakeproof-type, tw int teeth (Att. Pt. for items 41 and 42) (Shakeproof)	4	
–45	NP151496S	—	. . PLATE, identification	1	
–46	NP151496R	—	. . PLATE, identification	1	
–47	Coml	—	. . SCREW, mach: Phillips drive; Bind H; SS, black oxidized; No. 4–40; 1/8 in lg (Att. Pt. for items 45 and 46) (Shakeproof)	4	
–48	HCM–R	XF21001	. . HOLDER, fuse (Buss)	1	
–49	ABS–15	F21001	. . FUSE, cartridge (Buss)	1	
–50	K7126649P9	—	. . DISK, indicator	1	
–51	HCM–R	XF21002	. . HOLDER, fuse (Buss)	1	
	ABS–5	F21002	. . FUSE, cartridge (Ref item 49) (Buss)	1	
–52	K7126649P7	—	. . DISK, indicator	1	
–53	HCM–R	XF21003	. . HOLDER, fuse (Buss)	1	
	ABS–3	F21003	. . FUSE, cartridge (Ref item 49) (Buss)	1	
–54	K7126649P10	—	. . DISK, indicator	1	
–55	HCM–R	—	. . HOLDER, fuse (Buss)	3	
	ABS–15	—	. . FUSE, cartridge (Ref item 49) (Buss)	1	
–56	K7126649P9	—	. . DISK, indicator	1	

FIG. & INDEX NO.	PART NUMBER	REF SYMBOL	NOMENCLATURE 1 2 3 4 5 6 7	UNITS PER ASSY	APPLI-CATION
			SWITCH PANEL (Cont)		
128–	ABS–5	—	. . FUSE, cartridge (Ref item 49) ..... (Buss)	1	
–57	K7126649P7	—	. . DISK, indicator	1	
	ABS–3	—	. . FUSE, cartridge (Ref item 49) ..... (Buss)	1	
–58	K7126649P10	—	. . DISK, indicator	1	
–59	1928	—	. . WASHER, lock (Att. Pt. for items 48, 50 thru 58) ..... (Shakeproof)	6	
–60	2679	J21013	. . CONNECTOR ASSEMBLY ..... (GE)	1	
–61	AN515B8R6	—	. . SCREW, mach: Phillips drive; RH; brass, black oxidized; No. 8–32; 3/8 in lg (Att. Pt.)	2	
–62	AN936B8B	—	. . WASHER, lock: bronze, tinned; round, No. 8; shakeproof-type, tw ext teeth (Att. Pt.)	2	
–63	AN340–8	—	. . NUT, hex: steel, cad pl; No. 8–32 (Att. Pt.)	2	
–64	ST52N	S21003	. . SWITCH, toggle	1	
–65	NP125976A	—	. . PLATE, identification	1	
–66	1922–01	—	. . WASHER, lock (Att. Pt. for items 64 and 65) ..... (Shakeproof)	1	
–67	NP137566H	—	. . PLATE, identification	1	
–68	NP151500C	—	. . PLATE, identification	1	
–69	NP151473H	—	. . PLATE, identification	1	
–70	NP137451C	—	. . PLATE, identification	1	
–71	NP151496P	—	. . PLATE, identification	1	
–72	NP151496T	—	. . PLATE, identification	1	
–73	Coml	—	. . SCREW, self-tapping: Phillips drive; Bind H; SS, black oxidized; No. 4–40; 1/4 in lg (Att. Pt. for items 67 thru 72) ..... (Shakeproof)	12	
			BIDIRECTIONAL COUPLER CU–295/U		
129–	D41790	—	BIDIRECTIONAL COUPLER CU–295/U ..... (Airtron)	1	
–1	C41809	—	. COVER ..... (Airtron)	1	
–2	AN515–8R6	—	. SCREW, mach: Phillips drive; RH; steel, cad pl; No. 8–32; 3/8 in lg (Att. Pt.)	4	
–3	AN515–8R6	—	. SCREW, mach: Phillips drive; RH; steel, cad pl; No. 8–32; 1/4 in lg (Att. Pt.)	4	
–4	AN935–8	—	. WASHER, lock: steel, cad pl; No. 8 (Att. Pt.)	4	
–5	9760–10	—	. CAP AND CHAIN SUBASSEMBLY ..... (Amphenol)	2	
–6	AN500C4–7	—	. SCREW, mach: slot drive; Fil H; SS; No. 4–40; 7/16 in lg (Att. Pt.)	2	
–7	AN365–440	—	. NUT, lock: steel; No. 4–40 (Att. Pt.)	2	
–8		—	. LABEL (Not included in D41790)	1	
–9	AN515–4R4	—	. SCREW, mach: slot drive; RH; steel, cad pl; No. 4–40; 1/4 in lg (Att. Pt.)	6	
–10	AN936B6B	—	. WASHER, lock: bronze, tinned; round, No. 4; shakeproof-type, tw ext teeth (Att. Pt.)	6	
–11	AN340–4	—	. NUT, hex: steel, cad pl; No. 4–40 (Att. Pt.)	6	
	B42457	W22101	. CABLE ASSEMBLY, RF ..... (Airtron)	1	
–12	RG8/U	—	. . CABLE, RF: 14-3/8 in lg	1	
–13	UG160A/U	J22101	. . CONNECTOR, receptacle	1	
–14	UG21B/U	P22105	. . CONNECTOR, plug	1	
–15	A42500–C	—	. . MARKER, cable ..... (Airtron)	1	
–16	A42500–J	—	. . MARKER, cable ..... (Airtron)	1	
	B42458	W22103	. CABLE ASSEMBLY, RF ..... (Airtron)	1	
–17	RG8/U	—	. . CABLE, RF: 10 in lg	1	
–18	UG21B/U	P22103	. . CONNECTOR, plug	1	
–19	UG21B/U	P22109	. . CONNECTOR, plug	1	
–20	A42500–G	—	. . MARKER, cable ..... (Airtron)	1	
–21	A42500–A	—	. . MARKER, cable ..... (Airtron)	1	
–22	A42500–L	—	. . MARKER, cable ..... (Airtron)	1	
	B4259	W22102	. CABLE ASSEMBLY, RF ..... (Airtron)	1	
–23	RG8/U	—	. . CABLE, RF: 14-7/8 in lg	1	
–24	UG160A/U	J22102	. . CONNECTOR, receptacle	1	
–25	UG21B/U	P22106	. . CONNECTOR, plug	1	
–26	A42500–D	—	. . MARKER, cable ..... (Airtron)	1	
–27	A42500–K	—	. . MARKER, cable ..... (Airtron)	1	
	B42462	W22104	. CABLE ASSEMBLY, RF ..... (Airtron)	1	
–28	RG8/U	—	. . CABLE, RF: 15-5/16 in lg	1	
–29	UG21B/U	P22104	. . CONNECTOR, plug	1	
–30	UG21B/U	P22110	. . CONNECTOR, plug	1	
–31	A42500–H	—	. . MARKER, cable ..... (Airtron)	1	
–32	A42500–B	—	. . MARKER, cable ..... (Airtron)	1	

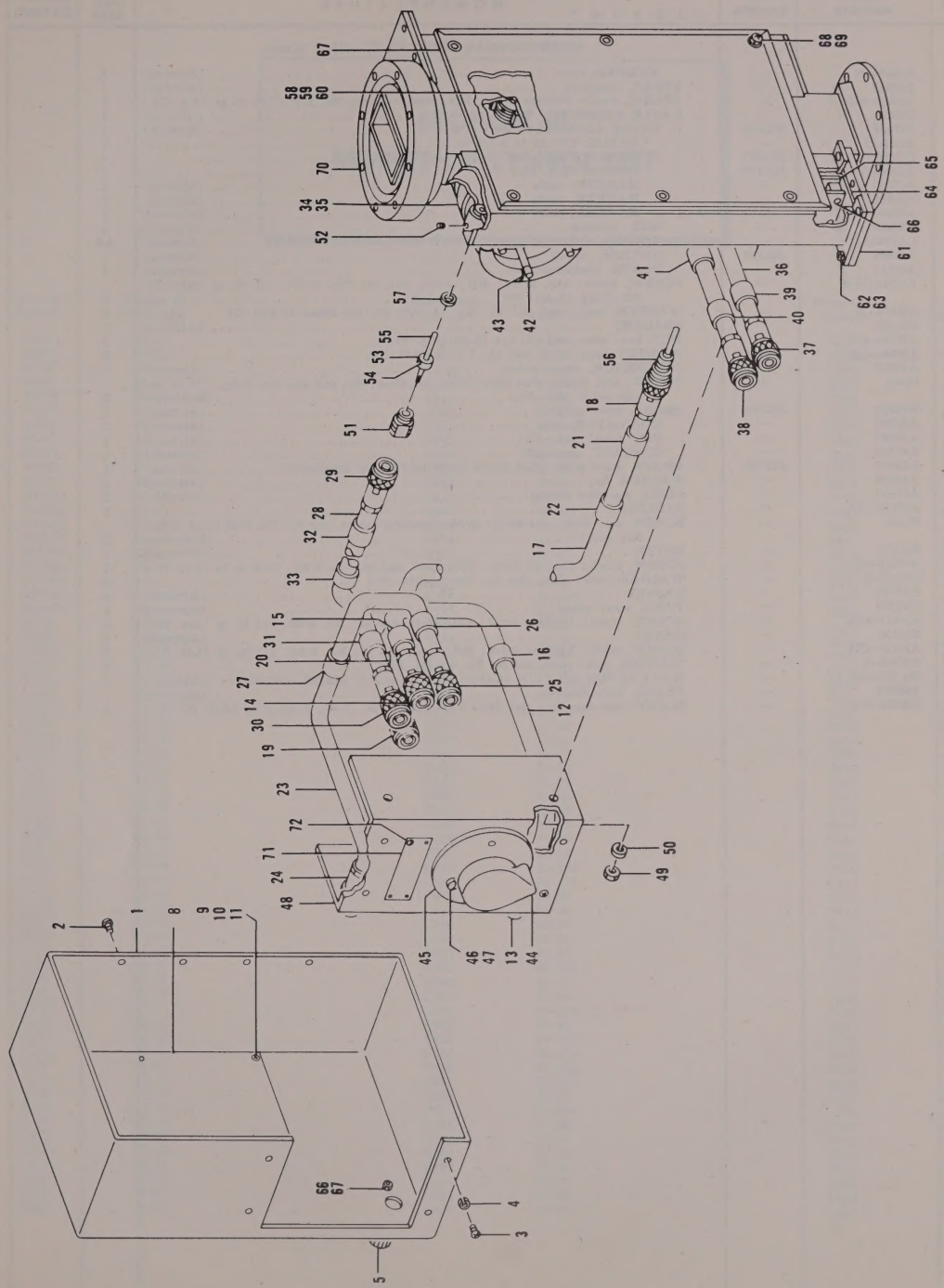

Figure 129. Bidirectional Coupler CU–295/U

FIG. & INDEX NO.	PART NUMBER	REF SYMBOL	1 2 3 4 5 6 7 NOMENCLATURE	UNITS PER ASSY	APPLI-CATION
			BIDIRECTIONAL COUPLER CU–295/U (Cont)		
129–33	A42500–M	—	. . MARKER, cable ....(Airtron)	1	
–34	A42447	—	. STRAP, retaining ....(Airtron)	1	
–35	AN515–8R6	—	. SCREW, mach: Phillips drive; RH; steel, cad pl; No. 8–32; 3/8 in lg (Att. Pt.)	2	
	C42461	—	. CABLE ASSEMBLY, RF ....(Airtron)	1	
	B42463	W22105	. . CABLE ASSEMBLY, RF ....(Airtron)	1	
–36	RG21–U	—	. . . CABLE, RF: 12 ft 2-3/8 in lg	1	
–37	UG18B/U	P22107	. . . CONNECTOR, plug	1	
–38	UG18B/U	P22108	. . . CONNECTOR, plug	1	
–39	A42500–E	—	. . . MARKER, cable ....(Airtron)	1	
–40	A42500–F	—	. . . MARKER, cable ....(Airtron)	1	
–41	A42500–N	—	. . . MARKER, cable ....(Airtron)	1	
–42	A42456	—	. . ROD, bracing ....(Airtron)	4	
–43	LA17281	—	. . STRING ....(Airtron)	AR	
–44	A42363	S22101	. . SWITCH, rotary ....(Airtron)	1	
–45	A42146	—	. . PLATE, identification ....(Airtron)	1	
–46	AN515–10–8	—	. SCREW, mach: slot drive; RH; steel, cad pl; No. 8–32; 1/2 in lg (Att. Pt. for items 44 and 45)	3	
–47	AN935–10	—	. WASHER, lock: steel, cad pl; No. 10 (Att. Pt. for items 44 and 45)	3	
–48	C41936	—	. BRACKET ....(Airtron)	1	
–49	AN340–416	—	. NUT, hex: steel, cad pl; 1/4 in–20 (Att. Pt.)	2	
–50	AN935–416	—	. WASHER, lock: steel, cad pl; 1/4 in (Att. Pt.)	2	
–51	A40017	—	. CONNECTOR, wave guide ....(Airtron)	2	
–52	Coml	—	. SCREW, set: Bristo six-spline drive; headless; SS, cad pl; No. 4–40; 1/8 in lg; cup point (Att. Pt.) ....(Bristolco)	2	
	B42357	J22104	. PROBE, wave guide ....(Airtron)	1	
–53	A40033	—	. . INSULATOR, ring ....(Airtron)	1	
–54	A40034	—	. . PIN, dowel (Att. Pt.) ....(Airtron)	1	
–55	A40662	—	. . CONTACT, electrical ....(Airtron)	1	
–56	B42357	J22103	. PROBE, wave guide (Ref items 53, 54 and 55 for breakdown)....(Airtron)	1	
–57	A43926	—	. WASHER, flat ....(Airtron)	2	
–58	A41904	—	. PLUG, machine thread ....(Airtron)	2	
–59	AN6227–12	—	. PACKING	2	
–60	Coml	—	. SCREW, set: Bristo six-spline drive; headless; steel, cad pl; No. 8–32; 3/4 in lg; flat point ....(Bristolco)	2	
–61	B41910	—	. COVER ....(Airtron)	2	
–62	AN515–8R7	—	. SCREW, mach: Phillips drive; RH; steel, cad pl; No. 8–32; 7/16 in lg (Att. Pt.)	12	
–63	AN935–8	—	. WASHER, lock: steel, cad pl; No. 8 (Att. Pt.)	12	
–64	A41909	—	. GASKET ....(Airtron)	2	
–65	A41908	—	. VANE, wave guide ....(Airtron)	4	
–66	AN515–4R4	—	. SCREW, mach: Phillips drive; RH; steel, cad pl; No. 4–40; 1/4 in lg (Att. Pt.)	8	
–67	B25652	—	. CHART ....(Airtron)	1	
–68	AN515–8R4	—	. SCREW, mach: Phillips drive; RH; steel, cad pl; No. 8–32; 1/4 in lg (Att. Pt.)	6	
–69	AN935–8	—	. WASHER, lock: steel, cad pl; No. 8 (Att. Pt.)	6	
–70	No Number	—	. WAVE GUIDE SECTION (C41980 and 6 pieces of A25366 assembled)...(Airtron)	1	
–71	A43924	—	. PLATE, identification ....(Airtron)	1	
–72	AN504–4–5	—	. SCREW, self-tapping: slot drive; RH; steel; No. 4–40; 5/16 in lg (Att. Pt.)....	4	

SECTION III
REFERENCE SYMBOL LIST

Reference Symbol	*Figure & Index No.*
B601	43–
B602	42–
B701	31–
B702	31–
B2701	53–
B2702	54–
B2801	23–2
B3101	61–
B4501	95–6
B5501	61–
B5701	61–
B10001	69–32
B10002	54–
B10101	73–32
B10102	54–
B10301	100–
B10401	54–
B21001	117–
B21401	118–157
B22001	115–
C101	26–55
C102	26–56
C103	26–50
C104	26–79
C105	26–57
C106	26–80
C107	26–81
C108	26–58
C109	26–66
C110	26–67
C111	26–59
C112	26–82
C113	26–61
C114	26–83
C115	26–60
C116	26–68
C117	26–71
C118	26–84
C119	26–70
C120	26–62
C121	26–53
C122	26–85
C123	26–52
C124	26–44
C125	26–54
C126	26–64
C127	26–86
C128	26–48
C130	26–46
C131	26–49
C132	26–69
C133	26–65
C134	26–47
C135	26–63
C136	26–51
C137	26–45
C138	26–43
C139	26–42
C140	26–41
C201	78–17
C202	78–46
C203	78–21
C301	37–66
C302	37–54
C303	37–63
C304	37–53
C305	37–90
C306	37–52
C307	37–105
C308	37–106
C309	37–64
C310	37–51
C311	37–50
C312	37–91
C313	37–65
C314	37–49
C315	37–48
C316	37–47
C317	37–60
C318	37–92
C319	37–103
C321	37–61
C322	37–46
C323	37–45
C324	37–44
C325	37–93
C326	37–101
C328	37–58
C329	37–57
C330	37–43
C331	37–42
C332	37–41
C333	37–95
C334	37–99
C336	37–55
C337	37–94
C338	37–96
C339	37–98
C340	37–97
C341	36–126
C342	36–127
C343	36–98
C344	36–43
C345	36–77
C346	36–73
C347	36–44
C348	36–128
C349	36–40
C350	36–60
C351	36–129
C352	36–45
C353	36–130
C354	36–131
C355	36–132
C356	36–133
C357	36–61
C358	36–134
C360	37–35
C361	37–40
C362	37–39
C363	37–38
C364	37–37
C365	37–36
C366	37–56
C367	37–59
C368	37–62
C501	46–36
C502	46–80
C503	46–81
C504	46–33
C505	46–37
C506	46–38
C507	48–82
C508	46–47
C509	46–39
C510	46–83
C511	46–48
C512	46–40
C513	46–84
C514	46–41
C515	46–85
C516	46–42
C517	46–86
C518	46–43
C519	46–87
C520	46–44
C521	46–88
C522	46–131
C523	46–34
C524	46–35
C525	46–71
C526	46–89
C527	46–90
C601	47–109
C602	47–39
C603	47–51
C604	47–105
C605	47–35
C606	47–50
C607	47–101
C608	47–52
C610	47–65
C611	47–53
C612	47–112
C613	47–61
C614	47–86
C615	47–71
C616	47–54
C617	47–59
C618	47–60
C619	47–124
C620	47–55
C621	47–56
C622	47–127
C623	45–18
C624	45–19
C625	45–28
C626	40–102
C627	45–26
C628	45–20
C629	47–38
C630	47–36
C631	44–22
C632	44–37
C633	44–38
C634	44–57

Reference Symbol	*Figure & Index No.*
C635	44–58
C636	44–60
C637	44–39
C638	44–40
C639	44–61
C640	47–37
C641	40–30
C642	44–23
C643	44–41
C644	40–6
C645	40–115
C646	40–114
C647	47–62
C701	34–87
C702	34–88
C703	34–89
C705	34–80
C706	34–90
C707	34–82
C708	34–78
C709	34–79
C710	34–53
C711	34–54
C712	34–91
C713	34–92
C714	34–93
C715	28–322
C717	32–104
C719	32–116
C720	32–89
C721	32–51
C722	32–90
C724	28–281
C725	28–283
C726	28–282
C727	28–293
C728	28–196
C730	28–197
C731	28–262
C732	28–263
C733	28–264
C734	28–265
C735	28–266
C736	28–267
C737	28–194
C738	28–195
C739	28–323
C740	28–313
C741	28–314
C742	28–336
C743	28–337
C744	28–335
C745	28–338
C746	34–57B
C747	34–57A
C901	21–48
C902	21–92
C903	21–62
C904	21–93
C905	21–72
C906	21–94
C907	21–63
C908	21–95
C909	21–73
C910	21–96
C911	21–64
C912	21–97
C913	21–98
C914	21–65
C915	21–99
C916	21–100
C917	21–66
C918	21–101
C919	21–102
C920	21–67
C921	21–103
C922	21–104
C923	21–68
C924	21–105
C925	21–69
C926	21–70
C927	21–71
C928	21–74
C929	21–75
C930	21–54
C931	21–55
C932	21–56
C933	21–57
C934	21–58
C935	21–59
C936	21–60
C937	21–61
C938	21–77
C939	21–27
C940	21–106
C941	21–76
C1001	17–312
C1002	17–354
C1003	17–355
C1004	17–69
C1005	17–31
C1006	17–337
C1007	17–28
C1008	17–338
C1009	17–339
C1010	17–29
C1011	17–340
C1012	17–30
C1013	17–148
C1014	17–316
C1015	17–341
C1016	17–45
C1017	17–44
C1018	17–353
C1019	17–288
C1020	17–292
C2201	35–172
C2202	35–171
C2203	35–97
C2204	35–101
C2205	35–169
C2206	35–205
C2207	35–206
C2208	35–93
C2209	35–207
C2210	35–208
C2211	35–209
C2212	35–195
C2213	35–193
C2214	35–191
C2215	35–210
C2216	35–158
C2217	35–211
C2218	35–224
C2219	35–217
C2701	2–219
	3–219
	4–221
C2702	2–193
	3–193
	4–195
C2703	2–208
	3–208
	4–210
C2704	2–209
	3–209
	4–211
C2705	2–145
	3–145
	4–147
C2706	2–147
	3–147
	4–149
C2707	2–146
	3–146
	4–148
C2801	22–14
C3001	39–78
C3002	39–80
C3003	39–127
C3004	39–135
C3101	90–223
C3102	90–180
C3103	90–179
C3201	38–209
C3202	38–290
C3203	38–139
C3204	38–210
C3205	38–217
C3206	38–243
C3207	38–218
C3208	38–219
C3209	38–211
C3210	38–232
C3211	38–75
C3212	38–314
C3213	38–212
C3501	27–16
C3502	27–39
C3503	27–40
C4501	95–35
C4502	95–86
C4601	77–76
C4602	77–77
C4603	77–78
C4604	77–92
C4605	77–107
C5601	63–65
C5602	63–64
C5603	63–62
C5604	63–61
C5605	63–63
C7001	64–38
C7002	64–39
C7003	64–70
C7004	64–87
C7005	64–88
C7006	64–74
C7007	64–75
C7008	64–68
C7009	64–69
C7010	64–89
C7011	64–90
C7012	64–76
C10001	69–67
C10002	66–137
C10003	66–138
C10004	66–139
C10101	73–67
C10102	71–137
C10103	71–138
C10104	71–139
C10201	75–86
C10202	75–87
C10203	75–88
C10204	75–89
C10205	75–90
C10206	75–103
C10207	75–104
C10208	75–105
C10209	75–106
C10210	75–107
C10211	75–91
C10301	99–1
C10401	85–20
C10601	68–32
C10602	68–30
C10603	68–31
C10604	68–67
C10605	68–66
C10606	68–65
C10607	68–38
C10608	68–64
C10609	68–37
C10701	76–4
C10702	76–5
C10703	76–6
C10704	76–7
C10705	76–8
C10706	76–9
C10707	76–10
C10709	76–67
C21101	116–108
C21102	116–31
C21103	116–32
C21104	116–137
C21105	116–136
C21106	116–19
C21107	116–120
C21108	116–121
C21109	116–56
C21201	108–14

Reference Symbol	*Figure & Index No.*
C21202	108–15
C21203	108–16
C21301	123–119
C21302	123–67
C21303	123–100
C21304	123–101
C21305	123–120
C21306	123–107
C21307	123–110
C21308	123–122
C21309	123–76
C21310	123–75
C21311	123–74
C21313	123–66
C21314	123–77
C21401	118–168
C21402	118–171
C21403	122–7
C21404	118–260
C21405	118–245
C21406	121–24
C21407	121–20
C21408	121–11
C21409	121–2
C21410	120–13
C21411	120–12
C21412	120–11
C21413	120–17
C21414	120–10
C21415	120–18
C21416	120–16
C21417	120–15
C21418	120–14
C21501	126–138
C21502	126–137
C21504	126–135
C21505	126–130
C21506	126–133
C21507	126–132
C21508	126–49
C21509	126–88
C21510	126–89
C21511	126–83
C21512	126–46
C21513	126–44
C21514	126–84
C21515	126–81
C21517	126–42
C21518	126–40
C21519	126–77
C21520	126–39
C21521	126–34
C21522	126–58
C21523	126–59
C21524	126–35
C21525	126–79
C21526	126–72
C21527	126–73
C21528	126–70
C21529	126–31
C21531	126–30
C21532	126–50
C21533	126–28
C21534	126–26
C21535	126–24
C21536	126–56
C21538	126–64
C21539	126–63
C21540	126–67
C21541	126–60
C21542	126–62
C21601	106–97
C21602	106–98
C21603	106–98
C21604	106–99
C21605	106–100
C21606	106–23
C21701	107–285
C21702	107–189
C21703	107–175
C21704	107–168
C21705	107–288
C21706	107–190
C21707	107–291
C21708	107–177
C21709	107–169
C21710	107–294
C21711	107–191
C21712	107–296
C21713	107–179
C21714	107–170
C21715	107–224
C21716	107–192
C21717	107–300
C21718	107–181
C21719	107–171
C21720	107–303
C21721	107–193
C21722	107–305
C21723	107–183
C21724	107–172
C21725	107–308
C21726	107–229
C21727	107–173
C21728	107–230
C21729	107–174
C21730	107–62
C21731	107–153
C21732	107–61
C21733	107–160
C21734	107–60
C21735	107–77
C21736	107–159
C21737	107–59
C21739	107–76
C21740	107–186
C21741	107–158
C21742	107–312
C21743	107–161
C21744	107–63
C21745	107–162
C21746	107–64
C21747	107–196
C21748	107–200
C21749	107–201
C21750	107–204
C21751	107–243
C21753	107–78
C21754	107–210
C21755	107–208
C21756	107–176
C21757	107–178
C21758	107–180
C21759	107–182
C21760	107–184
C21761	107–185
C21762	107–163
C21763	107–152
C21764	107–275
C21765	107–282
C21901	105–109
C21902	105–155
C21903	105–154
C21904	105–107
C21905	105–102
C21906	105–108
C21907	105–103
C21908	105–112
C21909	105–111
C21910	105–110
C21911	105–156
C21912	105–157
C21913	105–158
CR501	46–59
CR502	46–60
CR601	40–19
CR701	30–117
CR702	30–114
CR703	28–289
CR2501	2–384
	3–377
	4–380
CR2502	2–385
	3–378
	4–381
CR2601	4–379
CR2701	2–181
	3–181
	4–183
CR3001	39–58
CR3501	27–45
CR5701	81–97
CR5702	81–98
CR21003	109–4
CR21004	101–227
CR21101	116–66
CR21002	116–65
CR21501	125–4
CR21502	125–11
E608	40–144
E701	30–
E702	33–
E705	28–
E706	28–
E707	28–144
E1001	17–205
E1002	17–212
E1003	19–
E1004	17–193
E1005	17–200
E1006	17–194
E1007	17–181
E1008	19–3
E1009	19–2
E1010	17–180
E1012	17–172
E2503	2–404
	3–397
	4–400
E2701	2–56
	3–57
	4–59
E2702	2–233
	3–233
	4–235
E2703	2–236
	3–236
	4–241
E2704	2–239
	3–239
	4–241
E2714	2–
	3–
	4–
E2720	2–345
	3–338
	4–340
E2721	2–346
	3–339
	4–341
E2722	2–347
	3–340
	4–342
E2724	2–439
	3–431
	4–434
E2725	2–442
	3–434
	4–437
E2801	23–16
E2802	23–7
E3001	39–98
E7210	92–85
E7211	92–82
E7212	92–79
E7213	92–76
E7214	92–73
E7215	92–88
E7216	92–91
E10001	66–
E10002	66–
E10003	66–250
E10004	66–86
E10005	66–22
E10006	66–123
E10101	71–
E10102	71–
E10103	71–
E10104	71–123
E10105	71–47
E10201	75–97
E10401	85–31
E21001	101–39
E21002	101–33
E21003	109–

Reference Symbol	*Figure & Index No.*
E21004	124–
E21005	128–19
E21006	110–
E21007	101–27
E21008	125–
E21009	101–157
E21101	116–10
E21103	116–4
E21108	116–5
E21301	123–38
E21401	118–
E21504	126–13
E21705	106–86
E21706	106–18
F701	28–119
F2701	2–401
	3–394
	4–397
F2801	22–58
E2901	62–40
F3001	39–26
F3201	38–
F3202	38–
F3203	38–
F3204	38–
F3205	38–
F3206	38–
F3207	38–
F3208	38–
F3209	38–
F3210	38–
F3211	38–
F3212	38–164
F3213	38–
F3214	38–
F3215	38–
F4501	95–105
F4601	77–
F4602	77–
F4603	77–
F5502	58–17
F5701	79–11
F5702	79–
F7001	64–132
F7002	64–
F7003	64–
F7004	64–
F7005	64–
F7006	64–
F7007	64–
F7008	64–
F7009	64–
F7010	64–
F21001	128–49
F21002	128–
F21901	105–26
F21902	105–
F21903	105–
F21904	105–
F21905	105–
F22001	112–7
I701	28–113
I702	28–
I703	28–
I704	28–
I705	28–
I1001	17–
I1002	17–107
I2201	35–20
I2801	22–61
I2802	22–
I2803	22–41
I2901	62–72
I2902	62–71
I2903	62–70
I2904	62–69
I2905	62–68
I3001	39–24
I3201	38–
I3202	38–
I3203	38–
I3204	38–
I3205	38–
I3206	38–
I3207	38–
I3208	38–
I3209	38–
I3210	38–
I3211	38–
I3212	38–148
I3213	38–
I3214	38–
I3215	38–
I3501	27–24
I4501	95–103
I4601	77–30
I4602	77–
I4603	77–
I4604	77–30
I5501	58–38
I5601	63–102
I5701	81–46
I5702	79–8
I5703	79–
I7001	64–121
I7002	64–
I7003	64–
I7004	64–
I7006	64–
I7007	64–
I7008	64–
I7009	64–
I7010	64–
I7201	92–63
I7202	92–44
I7203	92–
I9601	65–58
I9602	65–
I10001	66–267
I10101	71–271
I10201	75–7
I10202	75–
I10203	75–
I10204	75–
I10205	75–
I10206	75–
I10207	75–
I10208	75–
I10209	75–
I10210	75–
I10211	75–
I21001	101–141
I21201	108–
I21202	108–
I21203	108–31
I21204	108–
I21401	118–234
I21402	118–133
I21901	105–19
I21902	105–
I21903	105–
I21904	105–
I21905	105–
I21906	105–
I22001	112–15
J101	26–31
J102	26–30
J103	26–25
J201	78–32
J202	78–33
J203	78–34
J204	78–37
J301	36–49
J302	37–28
J303	36–70
J304	37–29
J305	36–69
J501	46–28
J502	46–27
J503	46–30
J504	46–29
J601	47–45
J602	40–66
J603	40–76
J604	40–82
J605	40–93
J606	40–94
J607	55–23
J608	40–178
J701	34–28
J702	34–25
J703	28–294
J711	28–146
J715	28–145
J716	28–297
J717	28–296
J718	28–295
J719	28–155
J901	21–32
J902	21–23
J903	21–31
J1001	17–266
J1002	17–267
J1003	17–268
J1004	17–269
J1005	17–274
J1006	17–156
J1007	17–273
J1008	17–275
J1009	19–4
J1012	17–176
J1013	19–5
J1016	17–184
J1023	17–265
J2201	35–139
J2202	35–143
J2203	35–138
J2204	35–135
J2205	35–22
J2206	35–21
J2207	35–23
J2208	35–155
J2701	2–187
	3–187
	4–187
J2702	2–234
	3–234
	4–236
J2703	2–237
	3–237
	4–242
J2704	2–240
	3–240
	4–242
J2706	2–428
	3–420
	4–423
J2707	2–433
	3–425
	4–428
J2708	2–434
	3–426
	4–429
J2709	2–472
	3–464
	4–467
	110–7
J2712	2–462
	3–454
	4–457
J2713	2–463
	3–455
	4–458
J2714	2–474
	3–466
	4–469
J2715	2–473
	3–465
	4–468
J2716	2–335
	3–328
	4–330
J2717	2–336
	3–329
	4–331
J2718	2–337
	3–330
	4–332
J2719	2–338
	3–331
	4–333

Reference Symbol	Figure & Index No.
J2720	2–351
	3–344
	4–346
J2721	2–352
	3–345
	4–348
J2722	2–353
	3–346
	4–348
J2724	2–443
	3–435
	4–438
J2725	2–444
	3–436
	4–439
J2726	2–350
	3–343
	4–345
J2727	2–349
	3–342
	4–344
J2728	2–429
	3–421
	4–424
J2801	22–10
J2901	62–4
J2902	62–12
J3001	39–119
J3002	39–123
J3003	39–34
J3101	90–46
J3201	38–195
J3202	38–191
J3203	38–187
J3204	38–186
J3205	38–80
J3206	38–185
J3501	27–32
J3502	27–33
J3503	27–34
J3504	27–29
J4501	95–92
J4502	95–87
J4601	77–120
J5501	60–2
J5502	60–3
J5503	60–4
J5504	60–5
J5505	60–6
J5506	60–7
J5507	60–8
J5508	60–10
J5509	60–9
J5510	58–8
J5511	60–11
J5512	60–12
J5513	60–13
J5601	63–32
J5602	63–31
J5603	63–33
J5604	63–37
J5605	63–38
J5701	82–2
J5702	82–3
J5703	82–4
J5704	82–5
J5705	82–6
J5706	82–7
J5707	82–8
J5708	82–9
J5709	82–10
J5710	82–19
J5711	82–20
J5712	82–21
J5713	82–22
J5714	82–23
J5715	82–24
J5716	82–25
J5717	82–26
J5718	79–23
J5719	79–24
J5720	82–11
J5721	82–12
J5722	82–13
J5723	82–14
J5724	82–15
J5725	82–16
J5726	82–17
J5801	80–20
J7001	64–43
J7002	64–47
J7201	92–107
J7202	92–108
J7203	92–117
J7204	92–116
J7205	92–115
J7206	92–114
J7207	92–120
J7208	92–118
J7209	92–119
J7210	92–86
J7211	92–83
J7212	92–80
J7213	92–77
J7214	92–74
J7215	92–89
J7216	92–92
J10001	66–420
J10002	66–380
J10003	66–381
J10004AB	66–425
J10005	66–23
J10006	66–239
J10007	66–244
J10008	66–12
J10009	66–16
J10010	66–444
J10011	66–261
J10012	66–359
J10013	66–358
J10014	66–81
J10101	71–427
J10102	71–428
J10103	71–378
J10104	71–377
J10105	71–376
J10106	71–433
J10107	71–48
J10108	71–247
J10109	71–252
J10110	71–257
J10111	71–265
J10112	71–461
J10113	71–17
J10114	71–12
J10115	71–382
J10116	71–383
J10117	71–384
J10118	71–439
J10201	75–142
J10301	98–4
J10302	98–6
J10303	98–5
J10401	85–47
J10402	85–42
J10403	85–49
J10404	85–48
J10601	68–49
J10602	68–48
J10603	68–47
J10604	68–5
J10605	68–46
J10701	76–71
J10702	76–72
J10703	76–73
J10704	76–74
J10705	76–75
J10706	76–78
J10707	76–82
J21001	128–28
J21002	128–27
J21003	128–26
J21004	128–23
J21005	128–20
J21006	128–22
J21007	128–21
J21011	124–5
J21013	128–60
J21101	116–71
J21102	116–72
J21103	116–7
J21104	116–76
J21105	116–77
J21106	116–78
J21107	116–79
J21108	116–6
J21201	108–46
J21301	123–44
J21304	123–70
J21305	123–51
J21306	123–52
J21307	123–54
J21405	118–77
J21406	118–76
J21407	118–24
J21408	118–75
J21409	118–74
J21410	120–6
J21412	118–79
J21413	118–78
J21418	118–138
J21419	118–162
J21420	118–163
J21421	118–164
J21501	126–14
J21502	126–19
J21503	126–106
J21504	126–107
J21505	128–18
J21601	106–131
J21602	106–126
J21603	106–130
J21606	106–17
J21611	106–138
J21612	106–137
J21613	106–133
J21701	107–6
J21702	107–5
J21703	107–7
J21704	107–10
J21705	107–9
J21706	107–8
J21707	107–147
J21708	107–146
J21709	107–145
J21710	107–148
J21711	107–144
J21712	107–11
J21713	107–149
J21901	105–150
J21902	105–146
J22001	112–19
J22101	129–13
J22102	129–24
J22103	129–56
J22104	129–
K301	36–25
K302	36–28
K303	36–27
K304	36–26
K601	40–34
K602	40–10
K701	28–237
K702	28–240
K703	28–239
K704	28–238
K705	32–55
K1001	17–35
K2201	35–115
K2202	35–120
K2203	35–116
K2204	35–119
K2205	35–118
K2206	35–117
K2207	35–114
K3001	39–85
K3002	39–86
K3003	39–84
K3101	90–165
K3102	90–166
K3103	90–167
K5601	63–13

Reference Symbol	*Figure & Index No.*
K5602	63–8
K5603	63–12
K5604	63–7
K5605	63–11
K5606	63–6
K5607	63–10
K5608	63–5
K5609	63–9
K5610	63–4
K5701	79–82
K5702	79–83
K5703	79–84
K5704	79–85
K5705	79–86
K5706	79–87
K5707	79–88
K5708	79–89
K5709	79–90
K5710	79–91
K5711	81–109
K5712	81–110
K9601	65–38
K9602	65–39
K10201	75–113
K10202	75–114
K10203	75–115
K10204	75–116
K10205	75–117
K10206	75–81
K10207	75–82
K10208	75–118
K10209	75–122
K10210	75–119
K10211	75–120
K10212	75–121
K10213	75–83
K10214	75–123
K10215	75–84
K10401	85–24
K10402	88–4
K10403	88–35
K10701	76–14
K10702	76–15
K10703	76–16
K10704	76–17
K10705	76–18
K10706	76–19
K10707	76–20
K21001	124–16
K21002	101–235
K21101	116–13
K21102	116–14
K21103	116–15
K21104	116–16
K21105	116–27
K21106	116–28
K21107	116–55
K21108	116–48
K21109	116–49
K21301	123–25
K21601	106–74
K21602	106–75
K21603	106–73
K21604	106–72
K21605	106–76
K21701	107–73
K21702	107–74
K21703	107–75
L101	26–74
L102	26–87
L103	26–88
L104	26–89
L105	26–90
L106	26–75
L107	26–76
L108	26–78
L109	26–77
L110	26–91
L111	26–92
L112	26–93
L113	26–94
L114	26–95
L115	26–96
L201	78–47

Reference Symbol	*Figure & Index No.*
L301	37–32
L302	37–81
L303	37–89
L304	37–33
L305	37–88
L306	37–33A
L307	37–87
L308	37–34
L309	37–84
L310	37–85
L311	37–86
L312	37–83
L313	37–80
L314	37–79
L315	37–78
L316	37–77
L317	37–144
L318	37–145
L319	37–146
L501	46–55
L502	46–91
L503	46–92
L504	46–93
L506	46–94
L507	46–95
L508	46–96
L509	46–97
L510	46–98
L511	46–99
L512	46–61
L513	46–130
L514	46–100
L601	47–89
L602	47–104
L604	47–114
L605	47–118
L608	47–125
L609	47–34
L610	44–45
L611	44–24
L612	44–49
L613	44–53
L614	47–30
L615	44–25
L616	40–7
L617	40–111
L620	47–33
L621	47–31
L622	47–32
L701	34–94
L702	34–85
L703	34–84A
L704	28–273
L706	28–272
L707	28–276
L708	28–301
L709	28–302
L710	28–303
L711	28–304
L903	21–81
L904	21–82
L905	21–83
L906	21–84
L907	21–85
L908	21–86
L909	21–107
L910	21–108
L911	21–109
L912	21–110
L913	21–111
L914	21–112
L915	21–113
L916	21–114
L1001	17–54
L1002	17–301
L2201	35–221
L3001	39–62
L3101	90–204
L3102	90–162
L3103	90–202
L4601	77–88
L10001	66–338
L10002	66–148
L10003	66–147

Reference Symbol	*Figure & Index No.*
L10101	71–341
L10102	71–148
L10103	71–147
L10401	89–12
L10601	68–24
L21101	116–26
L21301	123–47
L21302	123–111
L21303	123–49
L21304	123–104
L21305	123–48
L21403	118–
L21501	126–136
L21502	126–129
L21503	126–134
L21504	126–131
L21505	126–89
L21506	126–86
L21507	126–85
L21508	126–92
L21509	126–82
L21510	126–91
L21511	126–80
L21512	126–76
L21513	126–38
L21514	126–57
L21515	126–71
L21516	126–90
L21517	126–54
L21518	126–68
L21519	126–75
L21520	126–61
L21521	126–93
L21522	126–55
L21523	126–94
L21701	107–219
L21702	107–18
L21703	107–17
L21704	107–16
L21705	107–15
L21706	107–14
L21707	107–311
L21708	107–247
L21709	107–287
L21710	107–293
L21711	107–298
L21712	107–277
L21713	107–306
L21714	107–310
L21715	107–19
L21901	105–91
L21902	105–98
L21903	105–99
M701	28–95
M702	28–93
M1001	17–113
M2201	35–27
M3201	38–140
M4601	77–13
M5601	63–54
M5602	63–55
M5603	63–57
M5604	63–58
M5605	63–56
M7001	64–157
M7002	64–159
M10201	75–19
M10202	75–20
M10203	75–21
M10204	75–22
M10205	75–23
M10206	75–24
M21201	108–21
M21202	108–19
M21203	108–17
M21204	108–25
M21601	106–24
M21901	105–45
P101	2–425
	3–417
	4–420
P102	2–412
	3–404
	4–407

Reference Symbol	Figure & Index No.
P103	2–416
	3–408
	4–411
P201	74–19
P202	74–21
P203	74–23
P204	77–149
P301	35–7
P302	2–497
	3–489
	4–492
P303	35–10
P304	35–9
P305	2–499
	3–491
	4–494
P501	40–75
P502	47–49A
P503	40–54
P504	44–46C
P601	40–65
P602	2–483
	3–475
	4–478
P603	2–486
	3–478
	4–481
P604	2–488
	3–480
	4–483
P605	2–491
	3–483
	4–486
P606	2–493
	3–485
	4–488
P607	47–49C
P608C	40–53
P608D	40–81
P701	2–480
	3–472
	4–475
P702	2–484
	3–476
	4–479
P703	34–85B
P705	32–43
P709	32–50
P710	28–
P711	2–457
	3–449
	4–452
P712	28–38
P713	28–34
P714	28–42
P715	2–459
	3–451
	4–454
P716	32–64
P717	32–65
P718	32–66
P719	2–478
	3–470
	4–473
P901	17–253
P902	17–233
P903	17–248
P1001	17–241
P1002	17–254
P1003	17–259
P1005	17–225
P1007	17–217
P1008	17–234
P1011	17–177
P1012	17–167
P1015	17–183
P1016	17–188
P1017	17–189
P1022	17–214
P1023	17–247
P2201	2–505
	3–497
	4–500
P2202	2–507
	3–499
	4–502
P2203	2–503
	3–495
	4–498
P2204	2–501
	3–493
	4–496
P2207	2–495
	3–487
	4–490
P2501	26–23
P2502	2–402
	3–395
	4–398
P2503	2–405
	3–398
	4–401
P2504	2–407
	3–399
	4–402
P2601	21–
P2602	17–168
P2702	2–232
	3–232
	4–234
P2703	2–235
	3–235
	4–237
P2704	2–238
	3–238
	4–240
P2705	2–80
	3–81
	4–83
P2706	2–422
	2–467
	3–414
	3–459
	4–417
P2707	2–426
	3–418
	4–421
P2708	2–413
	3–405
	4–405
P2709	2–470
	3–462
	4–465
P2710	2–409
	3–401
	4–404
P2712	17–260
P2713	17–242
P2714	17–226
P2715	17–218
P2724	2–437
	3–429
	4–432
P2725	2–440
	3–432
	4–435
P2801	2–399
	3–392
	4–395
P2901	57–8
P2902	57–11
P3001	2–509
	3–501
	4–504
P3002	2–512
	3–504
	4–507
P3201	2–515
	3–507
	4–510
P3202	2–517
	3–509
	4–512
P3203	2–519
	3–511
	4–514
P3204	2–521
	3–513
	4–516
P3206	2–523
	3–515
	4–518
P3501	2–455
	3–447
	4–450
	101–274
P3502	2–449
	3–441
	4–444
	101–279
P3503	2–452
	3–444
	4–447
P4501	95–99
P4601	74–11
P5601	57–20
P5602	57–26
P5603	57–14
P5604	57–23
P5605	57–17
P7001	57–29
P7002	57–31
P7210	92–84
P7211	92–81
P7212	92–78
P7213	92–75
P7214	92–72
P7215	92–87
P7216	92–90
P7427	92–35
P9601	57–34
P9602	57–37
P10004C	66–80
P10004D	66–5
P10106C	71–438
P10106D	71–5
P10201	74–14
P10203	74–16
P10601	66–6
	71–6
P10602	66–11
	71–11
P10603	66–15
	71–16
P10604	68–4
P10605	66–124
	71–122
P10701	74–25
P10702	74–27
P10703	74–29
P10704	74–31
P10705	74–33
P10706	75–74
P10707	75–77
P21004B	101–339
P21005B	101–327
P21005C	101–333
P21006B	101–321
P21007B	101–315
P21009	101–303
P21010	101–375
P21011	101–276
P21101	101–295
P21102	101–293
P21103	101–363
P21108	101–369
P21301	101–376
P21302	101–303
P21303	101–310
P21304	101–282
P21401	101–328
P21402	101–357
P21404	101–363
P21405	118–67
P21406	118–66
P21407	120–38
P21408	118–62
P21409	118–61
P21410	101–297
P21411	101–262

Reference Symbol	*Figure & Index No.*
P21412	118–72
P21413	118–71
P21415	101–370
P21416	118–30
P21417	118–31
P21418	101–299
P21501	101–272
P21502	101–345
P21505	101–351
P21506	101–309
P21601	101–284
P21602	101–291
P21603	101–270
P21610	101–334
P21611	101–322
P21612	101–316
P21613	101–286
P21701	101–346
P21702	101–352
P21703	101–340
P21704	101–358
P21705	106–87
P21706	106–19
P21901	101–288
P21902	101–267
P22001	101–264
P22002	112–50
P22103	129–18
P22104	129–29
P22105	129–14
P22106	129–25
P22107	129–37
P22108	129–38
P22109	129–19
P22110	129–30
R101	26–97
R102	26–98
R103	26–99
R104	26–100
R105	26–101
R106	26–102
R107	26–103
R108	26–104
R109	26–105
R110	26–106
R111	26–107
R112	26–108
R113	26–109
R114	26–110
R115	26–111
R116	26–112
R117	26–113
R118	26–114
R119	26–115
R120	26–116
R121	26–117
R122	26–118
R123	26–119
R124	26–120
R125	26–121
R126	26–122
R127	26–123
R201	78–48
R202	78–49
R203	78–50
R204	78–26
R205	78–51
R206	78–52
R207	78–53
R208	78–54
R209	78–43
R210	78–55
R211	78–56
R301	37–107
R302	37–108
R303	37–140
R304	37–109
R305	37–110
R306	37–138
R307	37–139
R308	37–112
R309	37–136
R310	37–111
R311	37–137
R312	37–133
R313	37–132
R314	37–126
R315	37–130
R316	37–116
R317	37–113
R318	37–114
R319	37–134
R320	37–115
R321	37–135
R322	37–125
R323	37–118
R324	37–117
R325	37–130
R326	37–127
R327	37–128
R328	37–129
R329	37–123
R330	37–120
R331	37–119
R332	37–124
R333	37–122
R334	37–121
R335	36–137
R336	36–97
R337	36–99
R338	36–135
R339	36–136
R340	36–94
R341	36–95
R342	36–96
R343	36–55
R344	36–62
R345	36–63
R346	36–91
R347	36–139
R348	36–64
R349	36–89
R350	36–90
R351	36–138
R352	36–65
R353	36–66
R354	36–140
R355	36–57
R356	36–56
R357	36–92
R358	36–141
R359	36–93
R360	36–100
R361	36–101
R362	36–102
R501	46–101
R503	46–102
R504	46–103
R505	46–104
R506	46–105
R507	46–106
R508	46–107
R509	46–108
R510	46–109
R511	46–110
R512	46–111
R513	46–112
R514	46–113
R515	46–114
R516	46–115
R517	46–116
R518	46–117
R519	46–118
R520	46–119
R521	46–120
R522	46–121
R523	46–122
R524	46–123
R525	46–124
R526	46–125
R527	46–126
R528	46–62
R529	46–63
R530	46–127
R531	46–128
R532	46–129
R533	46–58
R601	47–106
R602	47–107
R603	47–102
R604	47–103
R605	47–108
R606	47–110
R607	47–116
R608	47–115
R609	47–111
R610	47–83
R611	47–113
R612	47–117
R613	47–121
R614	47–120
R615	47–126
R616	47–123
R617	47–122
R618	45–29
R619	45–7
R620	45–31
R621	45–30
R622	45–27
R623	44–48
R624	44–56
R625	44–55
R626	44–59
R627	44–54
R628	44–62
R629	44–17
R630	44–52
R631	44–51
R632	40–156
R633	40–128
R634	40–127
R635	40–126
R636	40–157
R637	40–125
R638	40–123
R639	40–199
R640	40–122
R641	40–124
R642	47–128
R643	47–119
R644	44–50
R645	40–121
R646	47–100
R647	44–47
R648	40–205
R649	40–206
R650	40–207
R651	40–208
R652	40–209
R653	40–210
R701	34–96
R702	34–97
R703	34–98
R704	34–99
R705	34–100
R706	34–101
R707	34–102
R708	34–103
R709	34–47
R710	34–104
R711	34–35
R712	34–36
R713	36–46
R714	34–37
R715	34–38
R718	28–325
R719	28–326
R720	32–137
R721	32–138
R722	32–111
R723	32–83
R724	32–110
R725	32–139
R726	32–140
R727	32–141
R728	32–142
R729	32–143
R730	32–113
R731	32–114
R732	32–115
R733	32–84
R734	32–74
R735	32–112
R736	32–144

Reference Symbol	Figure & Index No.
R737	32–128
R738	32–129
R739	32–85
R740	32–131
R741	32–130
R742	32–86
R743	32–145
R744	34–105
R745	28–185
R746	28–103
R747	28–204
R748	28–203
R750	28–206
R751	28–329
R752	28–207
R753	28–208
R754	28–210
R755	28–211
R756	28–327
R757	28–328
R758	28–331
R759	28–332
R760	28–177
R761	28–174
R762	28–330
R763	28–175
R764	28–173
R765	28–106
R766	34–106
R767	34–107
R769	28–176
R770	28–105
R771	28–104
R772	28–172
R773	28–102
R774	28–101
R775	28–324
R776	28–209
R777	28–171
R778	28–24
R779	28–27
R780	28–
R781	28–
R782	32–146
R783	28–315
R784	28–334
R785	28–316
R786	28–333
R901	21–115
R902	21–116
R903	21–117
R904	21–118
R905	21–119
R906	21–120
R907	21–121
R908	21–122
R909	21–123
R910	21–124
R911	21–125
R912	21–126
R913	21–127
R914	21–128
R915	21–129
R916	21–130
R917	21–131
R918	21–132
R919	21–133
R920	21–134
R921	21–135
R922	21–136
R923	21–137
R924	21–138
R925	21–139
R926	21–140
R927	21–141
R928	21–142
R929	21–143
R1001	17–102
R1002	17–103
R1003	17–164
R1004	17–311
R1005	17–318
R1006	17–317
R1007	17–310
R1008	17–104
R1009	17–359
R1010	17–331
R1011	17–98
R1012	17–336
R1013	17–350
R1014	17–349
R1015	17–357
R1016	17–329
R1017	17–352
R1018	17–330
R1019	17–333
R1020	17–67
R1021	17–356
R1022	17–332
R1023	17–328
R1024	17–335
R1025	17–358
R1026	17–334
R1027	17–77
R1028	17–315
R1029	17–147
R1030	18–9
R1031	18–11
R1032	18–10
R1033	18–8
R1034	17–313
R1035	17–314
R1036	17–351
R1037	17–327
R1038	17–300
R2201	35–48
R2202	35–170
R2203	35–49
R2204	35–92
R2205	35–201
R2206	35–51
R2207	35–168
R2208	35–167
R2209	35–202
R2210	35–52
R2211	35–166
R2212	35–53
R2213	35–189
R2214	35–194
R2215	35–203
R2216	35–204
R2217	35–192
R2218	35–190
R2219	35–188
R2220	35–187
R2221	35–165
R2222	35–153
R2701	2–223
	3–223
	4–225
R2702	2–224
	3–224
	4–226
R2703	2–248
	3–248
	4–250
R2704	2–249
	3–249
	4–251
R2705	2–250
	3–250
	4–252
R2706	2–251
	3–251
	4–253
R2707	2–252
	3–252
	4–254
R2708	2–253
	3–253
	4–255
R2709	2–410
	3–402
	4–405
R2710	2–224A
	3–224A
	4–226A
R2801	23–19
R3001	39–11
R3002	39–14
R3003	39–140
R3004	39–141
R3005	39–142
R3101	90–217
R3102	90–216
R3103	90–215
R3104	90–214
R3105	90–81
R3106	90–80
R3107	90–79
R3108	90–78
R3109	90–77
R3110	90–76
R3111	90–75
R3201	38–271
R3202	38–272
R3203	38–286
R3204	38–287
R3205	38–277
R3206	38–278
R3207	38–276
R3208	38–285
R3209	38–284
R3210	38–283
R3211	38–282
R3212	38–281
R3213	38–280
R3214	38–69
R3215	38–279
R3216	38–275
R3217	38–274
R3218	38–273
R3219	38–288
R3220	38–289
R3221	38–270
R3222	38–228
R3223	38–235
R3224	38–256
R3225	38–257
R3226	38–258
R3227	38–259
R3228	38–260
R3229	38–261
R3230	38–262
R3231	38–254
R3232	38–71
R3233	38–255
R3234	38–244
R3235	38–245
R3236	38–246
R3237	38–229
R3238	38–234
R3239	38–230
R3240	38–24
R3241	38–202
R3242	38–199
R3243	38–200
R3244	38–120
R3245	38–203
R3246	38–204
R3247	38–205
R3248	38–299
R3249	38–301
R3250	38–298
R3251	38–300
R3252	38–73
R3253	38–302
R3254	38–306
R3255	38–305
R3256	38–304
R3257	38–303
R3262	38–318
R3263	38–72
R3264	38–119
R3265	38–323
R3266	38–315
R3267	38–317
R3268	38–316
R3269	38–324
R3270	38–321
R3271	38–322
R3272	38–320

Reference Symbol	*Figure & Index No.*
R3273	38–233
R3274	38–70
R3275	38–231
R3276	38–124
R3277	38–125
R3278	38–126
R3279	38–127
R3280	38–128
R3281	38–129
R3282	38–130
R3283	38–131
R3284	38–132
R3285	38–133
R3286	38–134
R3287	38–135
R3288	38–136
R3289	38–137
R3290	38–138
R3291	38–227
R3292	38–226
R3501	27–56
R3502	27–55
R3503	27–54
R3504	27–57
R3505	27–60
R3506	27–58
R3507	27–59
R3508	27–19A
R4501	95–20
R4502	95–21
R4503	95–22
R4504	95–23
R4505	95–24
R4506	95–25
R4507	95–26
R4508	95–27
R4509	95–28
R4510	95–29
R4511	95–30
R4512	95–31
R4513	95–77
R4601	77–126
R4602	77–127
R4603	77–128
R4604	77–129
R4605	77–130
R4606	77–131
R4607	77–132
R4608	77–133
R4609	77–134
R4610	77–135
R4611	77–136
R4612	77–105
R4613	77–137
R4614	77–138
R4615	77–139
R4618	77–140
R4619	77–141
R4620	77–142
R4621	77–143
R5601	63–132
R5602	63–68
R5603	63–133
R5604	63–69
R5605	63–135
R5606	63–71
R5607	63–136
R5608	63–72
R5609	63–134
R5610	63–70
R5701	79–61
R5702	79–62
R7001	64–184
R7002	64–185
R7003	64–186
R7004	64–187
R7005	64–188
R7006	64–189
R7007	64–190
R7008	64–191
R7009	64–192
R7010	64–193
R7011	64–194
R7012	64–195
R7013	64–196
R7014	64–197
R7015	64–198
R7016	64–199
R7017	64–200
R7018	64–201
R7019	64–202
R7020	64–203
R7021	64–92
R7022	64–152
R7023	64–93
R7024	64–94
R7025	64–95
R7026	64–96
R7027	64–97
R7028	64–98
R7029	64–99
R7030	64–100
R7031	64–153
R7032	64–101
R7033	64–102
R7034	64–103
R7035	64–28
R7036	64–104
R7037	64–29
R7038	64–30
R7039	64–31
R7040	64–58
R7041	64–59
R7042	64–60
R7043	64–61
R7044	64–65
R7045	64–64
R7046	64–66
R7047	64–67
R7048	64–62
R7049	64–63
R7050	64–91
R7201	92–66
R7272	92–103
R9601	65–31
R9602	65–32
R10001	66–129
R10002	66–128
R10003	66–126
R10004	66–127
R10005	66–135
R10006	66–136
R10007	66–335
R10008	66–336
R10009	66–130
R10010	66–304
R10011	66–305
R10012	66–300
R10013	66–301
R10014	66–302
R10015	66–303
R10101	71–126
R10102	71–127
R10103	71–128
R10104	71–129
R10105	71–135
R10106	71–136
R10107	71–333
R10108	71–334
R10109	71–130
R10110	71–287
R10111	71–288
R10112	71–289
R10201	75–152
R10401	87–2
R10402	87–3
R10403	87–4
R10404	87–5
R10405	88–2
R10406	88–3
R10601	68–57
R10602	68–80
R10603	68–81
R10604	68–82
R10605	68–58
R10606	68–73
R10607	68–83
R10608	68–72
R10609	68–71
R10610	68–84
R10611	68–85
R10612	68–70
R10613	68–69
R10614	68–68
R10615	68–36
R10701	76–88
R10702	76–89
R10703	76–90
R10704	76–91
R10705	76–92
R10706	76–93
R10707	76–94
R10708	76–95
R10709	76–96
R10710	76–97
R10711	76–98
R10712	76–99
R10713	76–100
R10714	76–101
R10715	76–102
R10716	76–32
R10717	76–33
R10718	76–34
R10719	76–35
R10720	76–36
R10721	76–37
R10722	76–38
R10723	76–39
R10724	76–40
R10725	76–41
R10726	76–103
R10727	76–104
R10728	76–105
R10729	76–106
R10730	76–107
R10731	76–108
R10732	76–109
R10733	76–110
R10734	76–111
R10735	76–112
R10736	76–42
R10737	76–43
R10738	76–44
R10739	76–45
R10740	76–46
R10741	76–47
R21101	116–80
R21102	116–81
R21103	116–84
R21104	116–85
R21105	116–83
R21106	116–82
R21107	116–115
R21108	116–116
R21109	116–117
R21110	116–118
R21111	116–150
R21112	116–119
R21113	116–133
R21114	116–134
R21115	116–135
R21118	116–148
R21119	116–149
R21302	123–106
R21303	123–121
R21304	123–108
R21305	123–109
R21306	123–123
R21307	123–112
R21308	123–113
R21309	123–114
R21310	123–124
R21311	123–117
R21312	123–118
R21313	123–116
R21314	123–115
R21316	123–127
R21317	123–105
R21318	123–126
R21319	123–125
R21320	123–63
R21401	118–175

Reference Symbol	*Figure & Index No.*
R21402	118–176
R21403	121–40
R21404	121–25
R21405	118–250
R21406	118–212
R21407	121–26
R21408	121–27
R21409	121–23
R21410	121–30
R21411	121–22
R21412	121–41
R21413	118–177
R21414	118–213
R21415	121–29
R21416	121–21
R21417	121–28
R21501	126–48
R21502	126–47
R21503	126–45
R21504	126–43
R21505	126–78
R21506	126–36
R21507	126–41
R21508	126–74
R21509	126–69
R21510	126–37
R21511	126–32
R21512	126–65
R21513	126–33
R21515	126–29
R21516	126–27
R21517	126–52
R21518	126–25
R21519	126–53
R21520	126–66
R21521	126–51
R21601	106–94
R21602	106–93
R21603	106–95
R21604	106–143
R21605	106–30
R21606	106–144
R21607	106–31
R21608	106–145
R21701	107–218
R21702	107–217
R21703	107–286
R21704	107–220
R21705	107–221
R21706	107–289
R21707	107–290
R21708	107–222
R21709	107–223
R21710	107–292
R21711	107–295
R21712	107–297
R21713	107–225
R21714	107–301
R21715	107–299
R21716	107–302
R21717	107–226
R21718	107–227
R21719	107–304
R21720	107–307
R21721	107–228
R21722	107–231
R21723	107–313
R21724	107–233
R21725	107–232
R21726	107–234
R21727	107–316
R21728	107–245
R21729	107–272
R21730	107–273
R21731	107–274
R21732	107–249
R21733	107–276
R21734	107–251
R21735	107–121
R21736	107–252
R21737	107–248
R21738	107–278
R21739	107–280
R21740	107–250

Reference Symbol	*Figure & Index No.*
R21741	107–279
R21742	107–281
R21743	107–258
R21744	107–215
R21745	107–283
R21746	107–216
R21747	107–123
R21748	107–309
R21750	107–270
R21751	107–271
R21752	107–262
R21753	107–269
R21754	107–267
R21755	107–268
R21756	107–260
R21757	107–261
R21758	107–266
R21759	107–265
R21760	107–264
R21761	107–236
R21762	107–119
R21763	107–235
R21764	107–213
R21765	107–122
R21766	107–257
R21767	107–238
R21768	107–239
R21769	107–197
R21770	107–199
R21771	107–198
R21773	107–240
R21774	107–242
R21775	107–202
R21776	107–241
R21777	107–203
R21778	107–237
R21779	107–120
R21780	107–244
R21781	107–206
R21784	107–205
R21785	107–207
R21786	107–209
R21788	107–256
R21789	107–246
R21790	107–126
R21791	107–211
R21792	107–125
R21793	107–124
R21794	107–212
R21795	107–284
R21796	107–259
R21797	107–214
R21798	107–254
R21799	107–315
R21800	107–314
R21801	107–263
R21802	107–255
R21803	107–253
R21901	105–195
R21902	105–194
R21903	105–193
R21904	105–125
R21905	105–189
R21906	105–188
R21907	105–187
R21908	105–186
R21909	105–192
R21910	105–191
R21911	105–190
R21912	105–181
R21913	105–180
R21914	105–179
R21915	105–126
R21916	105–122
R21917	105–177
R21918	105–163
R21919	105–183
R21920	105–182
R21921	105–184
R21922	105–185
R21923	105–14
R21924	105–15
R21925	105–16
R21926	105–17

Reference Symbol	*Figure & Index No.*
R21927	105–13
R21928	105–164
R21929	105–165
R21930	105–178
R21931	105–12
S601	40–162
S701	28–151
S702	28–123
S703	28–124
S704	30–46
S705	30–47
S706	28–125
S707	28–126
S708	33–4
S709	33–5
S710	34–50
S711	32–82
S1001	17–110
S1002	17–109
S1003	17–111
S1004	18–25
S1005A	17–126
S1005B	16–11
S1006	17–130
S2201	35–31
S2202	35–32
S2203	35–34
S2204	35–33
S2205	35–40
S2206	35–214
S2701A	2–266
	3–266
	4–268
S2701B	51–2
S2702	2–278
	3–278
	4–280
S2705A	2–389
	3–382
	4–385
S2705B	40–98
S2706	2–280
	3–280
	4–282
S2707A	2–268
	3–268
	4–270
S2707B	35–147
S2708	2–281
	3–281
	4–283
S2709A	2–391
	3–384
	4–387
S2710	2–282
	3–282
	4–284
S2711A	2–265
	3–265
	4–267
S2711B	52–2
S2712	2–279
	3–279
	4–281
S2713A	2–386
	3–379
	4–382
S2714A	2–387
	3–380
	4–383
S2715A	2–388
	3–381
	4–384
S2716A	2–267
	3–267
	4–269
S2717A	2–390
	3–383
	4–386
S2713B	56–24
S2714B	56–25
S2715B	56–26
S2716B	56–27
S2717B	56–28

Reference Symbol	*Figure & Index No.*
S2718	2–396
	3–389
	4–392
S2719	2–82
	3–83
	4–85
S2801	22–45
S2802	22–42
S2803	23–30
S2804	23–31
S2805	25–25
S2901	62–60
S2902	62–58
S2903	62–56
S2904	62–54
S2905	62–52
S2906	62–53
S2907	62–55
S2908	62–57
S2909	62–59
S2910	62–61
S3001	39–19
S3101A	90–28
S3101B	90–32
S3102	90–40
S3201	38–144
S3202	38–181
S3501	27–5
S4501	95–101
S5501	58–60
S5502	58–54
S5503	58–47
S5504	58–74
S5505A	58–66
S5506	58–75
S5507A	58–65
S5507B	63–116
S5601	63–75
S5602	63–90
S5603	63–85
S5604	63–80
S5605	63–91
S5606	63–86
S5607	63–81
S5608	63–76
S5609	63–78
S5610	63–93
S5611	63–88
S5612	63–83
S5613	63–94
S5614	63–89
S5615	63–84
S5616	63–79
S5619	63–77
S5620	63–92
S5621	63–87
S5622	63–82
S5623	63–103
S5701	79–31
S5702	79–32
S5703	79–33
S5704	79–34
S5705	79–35
S5706	79–36
S5707	79–37
S5708	79–38
S5709	79–39
S5710	79–40
S5711A	81–22
S5711B	75–147
S5712A	81–23
S5712B	77–94
S5713	81–11
S5714	79–28
S5715	81–34
S5716	81–31
S5717	81–16
S5718	81–17
S5719	81–17A
S6905B	64–51
S7201	92–46
S7202	92–47
S7203	92–48
S7204	92–49
S7205	92–50
S7206	92–51
S7207	92–52
S7208	92–53
S7209	92–54
S7210	92–55
S7211	92–56
S7212	92–57
S7213	92–58
S7214	92–59
S7215	92–60
S7216	92–67
S10001	66–28
S10002	69–55
S10003	69–54
S10004	69–53
S10005	69–52
S10006A	66–318
S10006B	66–325
S10007A	66–319
S10007B	66–326
S10008	66–333
S10009A	66–320
S10009B	66–327
S10010A	66–321
S10010B	66–328
S10011	66–265
S10012	66–413
S10101	73–
S10102	73–55
S10103	73–54
S10104	73–53
S10105	73–52
S10106A	71–318
S10106B	71–323
S10107A	71–319
S10107B	71–324
S10108	71–331
S10109A	71–316
S10109B	71–325
S10110A	71–317
S10110B	71–326
S10111	71–269
S10112	71–410
S10201	75–34
S10202	75–35
S10203	75–36
S10204	75–37
S10205	75–38
S10206	75–41
S10207	75–44
S10208	75–46
S10209	75–47
S10401A	84–10
S10401B	84–5
S10402A	84–11
S10402B	84–6
S10403	85–35
S10601	68–52
S21001	128–42
S21002	128–41
S21003	128–64
S21004A	101–246
S21004B	105–142
S21005	101–240
S21201	108–35
S21202	108–36
S21203	108–39
S21204	108–42
S21205	108–43
S21401	118–122
S21402	118–39
S21406	118–128
S21601	106–41
S21602	106–39
S21603	106–38
S21604	106–37
S21606	106–40
S21901	105–41
S21902	105–36
S22001	114–
S22002	112–18
S22101	129–44
T201	78–14
T601	45–32
T602	40–23
T603	40–3
T604	47–72
T701	34–52A
T702	28–275
T703	28–274
T704	28–278
T705	28–277
T901	21–144
T1001	17–50
T1002	17–49
T2201	35–94
T2701	2–200
	3–200
	4–202
T2702	2–215
	3–215
	4–217
T3001	39–65
T3101	90–208
T3102	90–207
T3103	90–203
T3501	27–20
T4601	77–82
T4602	77–85
T5701	81–101
T7001	64–35
T10001	66–344
T10002	66–73
T10003	66–231
T10004	66–337
T10005	66–
T10006	66–
T10101	71–347
T10102	71–61
T10103	71–239
T10104	71–335
T10105	71–
T10106	71–
T10107	71–
T10401	89–43
T10402	89–10
T10403	89–11
T10601	68–27
T10602	68–42
T10701	76–23
T21001	101–231
T21101	116–36
T21403	118–263
T21404	118–256
T21405	122–4
T21406	118–117
T21407	121–37
T21501	126–118
T21601	106–78
T21602	106–81
T21901	105–92
T21902	105–95
TB601	40–87
TB602	40–88
TB2701	2–301
	3–294
	4–296
TB2702	2–302
	3–295
	4–297
TB2703	2–303
	3–296
	4–298
TB2704	2–304
	3–297
	4–299
TB2705	2–305
	3–298
	4–300
TB2706	2–306
	3–299
	4–301
TB2707	2–
	3–
	4–
TB2708	2–324
	3–317
	4–319

Reference Symbol	Figure & Index No.
TB2709	2–300
	3–293
	4–295
TB2710	2–325
	3–318
	4–320
TB2801	22–18
TB3101	90–185
TB3102	90–184
TB5701	79–70
TB5703	81–92
TB5704	81–64
TB5705	81–65
TB5706	81–66
TB5707	81–67
TB21001	128–4
TB21002	128–5
TB21003	128–6
TB21004	128–7
TB21005	128–8
TB21006	128–14
TB21007	128–15
TB21008	101–81
TB21201	108–10
TB21202	108–9
TB21701	107–138
TB21702	107–139
TB22001	112–22
V101	26–3
V102	26–4
V103	26–5
V104	26–9
V105	26–6
V106	26–8
V107	26–7
V201	78–3
V202	78–6
V203	78–9
V301	37–12
V302	37–11
V303	37–10
V304	37–15
V305	37–9
V306	37–14
V307	37–8
V308	37–13
V309	37–7
V310	36–7
V311	36–18
V312	36–13
V313	36–19
V501	46–6
V502	46–7
V503	46–8
V504	46–9
V505	46–10
V506	46–11
V507	46–12
V508	46–13
V509	46–14
V601	47–10
V602	47–9
V603	47–11
V604	47–12
V605	47–13
V606	47–14
V607	44–8
V608	44–7
V609	44–6
V610	40–44
V701	34–11
V702	34–10
V703	34–9
V704	34–20
V705	34–8
V706	32–10
V707	32–11
V708	32–21
V709	32–23
V710	32–22
V711	32–24
V712	32–25
V713	28–228
V714	32–35
V715	28–222
V716	28–221
V717	28–88
V901	21–5
V902	21–6
V903	21–7
V904	21–8
V905	21–9
V906	21–10
V907	21–11
V908	21–12
V1001	17–11
V1002	17–12
V1003	17–13
V1004	17–14
V1005	17–15
V1006	19–1
V1007	17–16
V1008	17–17
V2201	35–106
V2202	35–107
V2203	35–105
V2501	2–379
	6–
V2502	3–372
	4–374
V2503	2–382
	6–
V2504	2–383
	6–
V2505	5–
V2506	5–
V2507	4–377
V2508	4–378
V2509	3–375
V2510	3–376
V2701	2–22
V2702	3–23
	4–25
V3101	90–91
V3102	90–92
V3103	90–93
V3104	90–94
V3105	90–95
V3106	90–96
V3107	90–97
V3108	90–98
V3109	90–99
V3110	90–100
V3111	90–101
V3112	90–102
V3113	90–103
V3114	90–104
V3115	90–105
V3116	90–106
V3117	90–107
V3118	90–108
V3119	90–109
V3120	90–110
V3121	90–111
V3122	90–112
V3123	90–113
V3124	90–114
V3125	90–115
V3126	90–116
V3127	90–117
V3128	90–118
V3129	90–119
V3130	90–120
V3201	38–22
V3202	38–21
V3203	38–20
V3204	38–47
V3205	38–7
V3206	38–25
V3207	38–24
V3208	38–51
V3209	38–50
V3210	38–23
V3211	38–6
V3212	38–5
V3213	38–52
V3214	38–8
V3215	38–49
V3216	38–48
V3217	38–27
V3218	38–53
V3219	38–9
V3220	38–10
V3221	38–54
V3222	38–26
V4601	77–55
V4602	77–56
V4603	77–57
V4604	77–58
V4605	77–59
V4606	77–60
V4607	77–61
V4608	77–62
V4609	77–63
V7001	64–10
V7002	64–11
V7003	64–12
V7004	64–13
V7005	64–14
V7006	64–15
V7007	64–16
V7008	64–17
V7009	64–18
V7010	64–19
V7011	64–21
V7012	64–22
V7013	64–20
V7014	64–23
V7015	64–24
V7016	64–25
V7017	64–26
V7018	64–27
V10001	66–97
V10002	66–98
V10003	66–87
V10004	66–88
V10005	66–44
V10006	66–45
V10007	66–61
V10101	71–33
V10102	71–34
V10103	71–24
V10104	71–23
V10105	71–223
V10106	71–224
V10107	71–88
V10108	71–89
V10109	71–90
V10401	86–15
V10402	86–16
V10403	86–17
V10404	86–18
V10405	86–19
V10406	86–20
V10601	68–14
V10602	68–15
V10603	68–16
V10604	68–13
V10701	76–50
V10702	76–51
V10703	76–52
V10704	76–53
V10705	76–54
V10706	76–55
V10707	76–56
V21001	101–147
V21002	109–15
V21003	109–16
V21004	109–17
V21005	109–18
V21006	109–19
V21007	109–20
V21008	109–21
V21009	109–22
V21010	109–23
V21011	109–24
V21012	109–25
V21013	109–26
V21014	109–27
V21015	109–28
V21101	116–52
V21102	116–54

Reference Symbol	*Figure & Index No.*
V21103	116–47
V21104	116–46
V21105	116–50
V21301	123–5
V21302	123–7
V21303	123–16
V21304	123–8
V21305	123–34
V21401	118–190
V21402	118–189
V21403	118–187
V21404	118–188
V21405	118–96
V21406	118–32
V21407	121–6
V21501	126–12
V21502	126–11
V21503	126–9
V21504	126–10
V21505	126–8
V21506	126–6
V21701	107–53
V21702	107–54
V21703	107–55
V21704	107–56
V21705	107–57
V21706	107–58
V21707	107–36
V21708	107–49
V21709	107–50
V21710	107–51
V21711	107–47
V21712	107–37
V21713	107–38
V21714	107–52
V21715	107–39
V21716	107–40
V21717	107–41
V21718	107–42
V21719	107–43
V21720	107–44
V21721	107–46
V21901	105–89
V21902	105–88
V21903	105–90
V21904	105–82
V21905	105–81
V21906	105–80
V21907	105–79
V21908	105–83
V21909	105–84
V21910	105–85
V21911	105–86
V21912	105–87
W101	26–
W603	40–
W604	40–
W605	40–
W607	40–
W703	32–
W704	28–
W705	28–
W706	28–
W707	28–
W708	32–
W901	21–
W1001	17–
W1002	17–
W1003	17–
W1004	17–
W1005	17–
W1006	17–
W1007	17–
W1008	17–
W1009	17–
W1010	17–
W1011	17–
W1012	17–
W2701	2–
	3–
	4–
W2702	2–
	3–
	4–
W2719	2–
	3–
	4–
W7201	92–
W10001	66–
W10002	66–
W10003	66–
W10004	66–
W10005	66–
W10006	66–238
W10007	66–243
W10008	66–
W10101	71–
W10102	71–
W10103	71–
W10104	71–
W10105	71–
W10106	71–246
W10107	71–251
W10108	71–256
W10109	71–
W20101	101–193
W21002	101–
W21003	101–
W21004	101–
W21005	101–
W21006	101–
W21007	101–
W21008	101–
W21009	101–
W21010	101–
W21011	101–
W21012	101–
W21013	101–
W21014	101–
W21601	106–
W21602	106–
W22101	129–
W22102	129–
W22103	129–
W22104	129–
W22105	129–
XC21735	107–109
XC21739	107–110
XC21753	107–108
XF701	28–118
XF2801	22–57
XF2901	62–39
XF3001	39–25
XF3101	90–230
XF3201	38–173
XF3202	38–174
XF3203	38–175
XF3204	38–176
XF3205	38–177
XF3206	38–178
XF3207	38–179
XF3208	38–167
XF3209	38–168
XF3210	38–171
XF3211	38–172
XF3212	38–163
XF3213	38–166
XF3214	38–169
XF3215	38–170
XF4501	95–104
XF4601	77–22
XF4602	77–24
XF4603	77–26
XF5501	58–20
XF5502	58–16
XF5701	79–12
XF5702	79–17
XF7001	64–133
XF7002	64–135
XF7003	64–137
XF7004	64–138
XF7005	64–140
XF7006	64–141
XF7007	64–142
XF7008	64–143
XF7009	64–144
XF7010	64–145
XF21001	128–48
XF21002	128–51
XF21003	128–53
XF21901	105–25
XF21902	105–28
XF21903	105–30
XF21904	105–31
XF21905	105–33
XF22001	112–6
XI701	28–112
XI702	28–114
XI703	28–117
XI704	28–116
XI705	28–115
XI1001	17–108
XI1002	17–106
XI2201	35–19
XI2801	22–60
XI2802	22–62
XI3001	39–23
XI3201	38–156
XI3202	38–157
XI3203	38–158
XI3204	38–159
XI3205	38–160
XI3206	38–161
XI3207	38–162
XI3208	38–150
XI3209	38–151
XI3210	38–154
XI3211	38–155
XI3212	38–147
XI3213	38–149
XI3214	38–152
XI3215	38–153
XI3501	27–23
XI4601	77–29
XI4602	77–32
XI4603	77–33
XI4604	77–34
XI5501	58–39
XI5601	63–101
XI5701	81–47
XI5702	79–9
XI5703	79–10
XI7001	64–122
XI7002	64–123
XI7003	64–124
XI7004	64–125
XI7005	64–126
XI7006	64–127
XI7007	64–128
XI7008	64–129
XI7009	64–130
XI7010	64–131
XI7201	92–62
XI7202	92–43
XI7203	92–45
XI9601	65–57
XI9602	65–59
XI10001	66–268
XI10101	71–272
XI10201	75–8
XI10202	75–9
XI10203	75–10
XI10204	75–11
XI10205	75–12
XI10206	75–13
XI10207	75–14
XI10208	75–15
XI10209	75–16
XI10210	75–17
XI10211	75–18
XI21001	101–142
XI21201	108–33
XI21202	108–32
XI21203	108–30
XI21204	108–34
XI21401	118–235
XI21402	118–134
XI21601	106–55
XI21901	105–18
XI21902	105–20
XI21903	105–21
XI21904	105–22

Reference Symbol	Figure & Index No.
XI21905	105–23
XI21906	105–24
XI22001	112–14
XK301	36–29
XK302	36–32
XK303	36–31
XK304	36–30
XK601	40–35
XK602	40–11
XK701	28–241
XK702	28–244
XK703	28–243
XK704	28–242
XK705	32–56
XK1001	17–36
XK2201	35–122
XK2202	35–125
XK2203	35–123
XK2204	35–126
XK2205	35–127
XK2206	35–124
XK2207	35–121
XK3001	39–93
XK3002	39–94
XK3003	39–92
XK3101	90–168
XK3102	90–169
XK3103	90–170
XK5601	63–23
XK5602	63–18
XK5603	63–22
XK5604	63–17
XK5605	63–21
XK5606	63–16
XK5607	63–20
XK5608	63–15
XK5609	63–19
XK5610	63–14
XK5701	79–92
XK5702	79–93
XK5703	79–94
XK5704	79–95
XK5705	79–96
XK5706	79–97
XK5707	79–98
XK5708	79–99
XK5709	79–100
XK5710	79–101
XK5711	81–111
XK5712	81–112
XK9601	65–40
XK9602	65–41
XK10201	75–124
XK10202	75–125
XK10203	75–126
XK10204	75–127
XK10205	75–128
XK10206	75–129
XK10207	75–130
XK10208	75–131
XK10209	75–137
XK10210	75–132
XK10211	75–133
XK10212	75–134
XK10213	75–135
XK10214	75–138
XK10215	75–136
XK21101	116–94
XK21102	116–95
XK21103	116–92
XK21104	116–91
XK21107	116–93
XK21108	116–88
XK21109	116–89
XK21301	123–26
XK21601	106–102
XK21602	106–101
XK21603	106–103
XK21604	106–105
XK21605	106–106
XK21701	107–112
XK21702	107–111
XK21703	107–107
XV101	26–12
XV102	26–13
XV103	26–14
XV104	26–18
XV105	26–15
XV106	26–17
XV107	26–16
XV201	78–4
XV202	78–7
XV203	78–10
XV301	37–24
XV302	37–23
XV303	37–22
XV304	37–18
XV305	37–21
XV306	37–17
XV307	37–20
XV308	37–16
XV309	37–19
XV310	36–8
XV311	36–20
XV312	64–14
XV313	36–21
XV501	46–15
XV502	46–16
XV503	46–17
XV504	46–18
XV505	46–19
XV506	46–20
XV507	46–21
XV508	46–22
XV509	46–23
XV601	47–16
XV602	47–15
XV603	47–17
XV604	47–18
XV605	47–19
XV606	47–20
XV607	44–11
XV608	44–10
XV609	44–9
XV610	40–45
XV701	34–15
XV702	34–14
XV703	34–13
XV704	34–21
XV705	34–12
XV706	32–12
XV707	32–13
XV708	32–26
XV709	32–28
XV710	32–27
XV711	32–29
XV712	32–30
XV713	28–229
XV714	32–26
XV715	28–224
XV716	28–223
XV717	28–89
XV901	21–13
XV902	21–14
XV903	21–15
XV904	21–16
XV905	21–17
XV906	21–18
XV907	21–19
XV908	21–20
XV1001	17–18
XV1002	17–19
XV1003	17–20
XV1004	17–21
XV1005	17–22
XV1006	17–75
XV1007	17–23
XV1008	17–24
XV2201	35–109
XV2202	35–108
XV2203	35–110
XV3101	90–121
XV3102	90–122
XV3103	90–123
XV3104	90–124
XV3105	90–125
XV3106	90–126
XV3107	90–127
XV3108	90–128
XV3109	90–129
XV3110	90–130
XV3111	90–131
XV3112	90–132
XV3113	90–133
XV3114	90–134
XV3115	90–135
XV3116	90–136
XV3117	90–137
XV3118	90–138
XV3119	90–139
XV3120	90–140
XV3121	90–141
XV3122	90–142
XV3123	90–143
XV3124	90–144
XV3125	90–145
XV3126	90–146
XV3127	90–147
XV3128	90–148
XV3129	90–149
XV3130	90–150
XV3201	38–30
XV3202	38–29
XV3203	38–28
XV3204	38–55
XV3205	38–13
XV3206	38–33
XV3207	38–32
XV3208	38–59
XV3209	38–58
XV3210	38–31
XV3211	38–12
XV3212	38–11
XV3213	38–60
XV3214	38–14
XV3215	38–57
XV3216	38–56
XV3217	38–35
XV3218	38–61
XV3219	38–15
XV3220	38–16
XV3221	38–62
XV3222	38–34
XV4601	77–64
XV4602	77–65
XV4603	77–66
XV4604	77–67
XV4605	77–68
XV4606	77–69
XV4607	77–70
XV4608	77–71
XV4609	77–72
XV7001	64–214
XV7002	64–215
XV7003	64–216
XV7004	64–217
XV7005	64–218
XV7006	64–219
XV7007	64–220
XV7008	64–221
XV7009	64–222
XV7010	64–223
XV7011	64–225
XV7012	64–226
XV7013	64–224
XV7014	64–227
XV7015	64–228
XV7016	64–229
XV7017	64–230
XV7018	64–231
XV10001	66–99
XV10002	66–100
XV10003	66–89
XV10004	66–90
XV10005	66–47
XV10006	66–46
XV10007	66–217
XV10101	71–35
XV10102	71–36
XV10103	71–26
XV10104	71–25
XV10105	71–226

Reference Symbol	*Figure & Index No.*
XV10106	71–225
XV10107	71–93
XV10108	71–92
XV10109	71–91
XV10401	86–42
XV10402	86–43
XV10403	86–44
XV10404	86–45
XV10405	86–46
XV10406	86–47
XV10601	68–18
XV10602	68–19
XV10603	68–20
XV10604	68–17
XV10701	76–57
XV10702	76–58
XV10703	76-59
XV10704	76–60
XV10705	76–61
XV10706	76–62
XV10707	76–63
XV21101	116–99
XV21102	116–103
XV21103	116–87
XV21104	116–86
XV21105	116–90
XV21301	123–9
XV21302	123–10
XV21303	9–17
XV21304	123–11
XV21305	123–40
XV21401	118–197
XV21402	118–196
XV21403	118–195
XV21404	118–203
XV21405	118–97
XV21407	121–7
XV21501	126–104
XV21502	126–103
XV21503	126–102
XV21504	126–101
XV21505	126–100
XV21506	126–99
XV21701	107–90
XV21702	197–89
XV21703	107–88
XV21704	107–87
XV21705	107–86
XV21706	107–85
XV21707	107–102
XV21708	107–80
XV21709	107–81
XV21710	107–82
XV21711	107–83
XV21712	107–101
XV21713	107–100
XV21714	107–84
XV21715	107–99
XV21716	107–98
XV21717	107–97
XV21718	107–96
XV21719	107–95
XV21720	107–94
XV21721	107–79
XV21901	105–138
XV21902	105–136
XV21903	105–137
XV21904	105–128
XV21905	105–127
XV21906	105–129
XV21907	105–130
XV21908	105–131
XV21909	105–132
XV21910	105–133
XV21911	105–134
XV21912	105–135
Z101	26–124
Z102	26–125
Z103	26–126
Z104	26–127
Z301	37–143
Z302	37–141
Z303	37–142
Z304	36–
Z601	48–
Z901	21–145
Z902	21–146
Z2701	2–213
	3–213
	4–215
Z2702	2–214
	3–214
	4–216
Z10001	66–350
Z10002	66–352
Z10003	66–349
Z10004	66–351
Z10005	66–436
Z10006	66–437
Z10007	66–438
Z10008	66–439
Z10009	66–440
Z10010	66–441
Z10011	66–442
Z10012	66–443
Z10101	71–355
Z10102	71–354
Z10103	71–356
Z10104	71–353
Z10105	71–357
Z10106	71–352
Z10107	71–460
Z10108	71–459
Z10109	71–458
Z10110	71–457
Z10111	71–456
Z10112	71–455
Z10113	71–454
Z21401	118–20
Z21402	120–31
Z21403	120–30
Z21404	120–29
Z21405	120–32
Z21406	120–23
Z21407	120–25
Z21408	120–27
Z21409	118–6
Z21410	120–28
Z21411	120–21
Z21412	118–
Z21413	118–
Z21414	118–
Z21415	120–22
Z21416	120–24
Z21417	120–26

SECTION IV
NUMERICAL PARTS LIST

PART NUMBER	STOCK NO. CODE	STOCK NO. SERIAL	FIG. & INDEX	TOTAL PER EQUIP
Arm			118–15	1
Armature Subassembly			12–12	4
Armature Subassembly			15–12	1
Base			67–1	1
Base			72–1	1
Bearing Subassembly			7–45	5
Bolt			2–124	10
Bolt			67–3	36
Bolt			97–	16
Bracket			101–136	1
Bracket			102–73	1
Bracket			102–75	1
Bracket			102–82	1
Bracket			102–83	1
Cabinet			16–2	1
Cabinet			94–25	1
Cabinet and Cover Subassembly			89–1	1
Cable			17–224	1
Cable			17–232	1
Cable			17–240	1
Cap			95–96	1
Capacitor Assembly			66–237	5
			66–242	
			71–245	
			71–250	
			71–255	
Carrier			125–3	2
			125–10	
Chassis			26–2	5
Chassis			27–1	6
Chassis			37–1	5
Chassis			55–56	5
Chassis			75–85	1
Chassis			105–3	1
Chassis			107–3	1
Chassis			112–3	1
Chassis			116–3	1
Chassis			126–4	1
Coil			118–113	1
Connector			2–409	5
Connector			21–	1
Connector			8–1	5
Connector			11–7	5
Connector			15–19	1
Coupling			111–4	1
Cover			26–11	5
Cover			56–1	5
Cover			56–2	5
Cover			56–3	5
Cover			56–4	5
Cover			56–5	5
Cover			56–6	5
Cover			56–7	5
Cover			95–74	1
Cover			101–130	1
Cover			102–41	1
Cover			115–19	1

PART NUMBER	STOCK NO. CODE	STOCK NO. SERIAL	FIG. & INDEX	TOTAL PER EQUIP
Cover Subassembly			18–1	1
Door			29–47	5
Door			49–1	5
Door			50–1	5
Door			51–1	5
Door			59–6	2
Door			67–10	1
Door			67–20	1
Door			72–10	1
Door			72–20	1
Door			102–16	1
Door			102–17	1
Door			102–18	1
Door			102–19	1
Door			102–33	1
Door			102–37	1
Door			103–11	1
Door			103–25	1
Door			104–11	1
Door			104–20	1
Door and Hinge Subassembly			56–12	20
Door and Hinge Subassembly			56–15	5
Door and Hinge Subassembly			56–18	5
Duct			59–38	2
Dummy Load			93–	1
Filter			118–63	1
Filter			118–68	1
Filter			118–73	1
Flange			13–30	5
Frame			59–1	2
Frame			67–1	1
Frame			72–1	1
Frame			91–1	1
Frame			102–1	1
Grille Subassembly			59–37	1
Holder			11–8	5
Holder			110–9	1
Housing Subassembly			8–8	5
Impeller			117–9	1
Key			99–35	1
Label			129–	1
Lamp			112–15	1
Lamp	8800	470795	65–58	5
			65–	
			79–8	
			79–	
			92–63	
Lamp	8800	470789	28–113	126
			28–	
			38–148	
			38–	
			64–121	
			64–	
			77–30	
			77–34	

PART NUMBER	STOCK NO.		FIG. & INDEX	TOTAL PER EQUIP
	CODE	SERIAL		
Lamp (Cont)			77–	
			95–103	
			105–19	
			105–	
Lamp	8800	476000	22–61	30
			22–	
			35–20	
			39–24	
			63–102	
			75–7	
			75–	
			112–15	
			118–133	
			118–234	
Lamp			108–31	4
			108–	
Lamp	8800	444200	75–	5
Lamp			58–38	3
			71–271	
			81–46	
Lamp	8800	503230	66–267	2
			101–141	
Lamp	8800	444600	17–107	10
			17–	
			27–24	
			92–44	
			92–	
Liner			115–10	1
Mixer Subassembly			125–25	1
Mounting			58–24	2
Nut			66–419	12
Nut			43–5	12
Nut			128–39	4
Nut			95–59	3
Nut			91–3	4
Nut			96–20	3
Nut			19–6	2
Nut			68–59	4
Nut			101–15	8
Nut			85–8	22
Nut			84–16	4
Nut			88–37	4
Nut			53–3	45
Nut			96–4	2
Panel			95–113	1
Panel			105–200	1
Panel			105–201	1
Panel			108–6	1
Pin			19–18	2
Pin			99–29	1
Pin			98–24	2
Pin			99–15	2
			99–17	
Plate			102–77	1
Plate			102–116	1
Plate			92–93	1
Plate Subassembly			7–56	5
Plug			98–7	1
Plunger Subassembly			11–1	5
Plunger Subassembly			15–15	1
Rack			55–4	5
Rack			84–1	1
Ring			95–55	1
Rod Subassembly			7–42	5
Rod Subassembly			125–16	1
Rotor			53–34	5
Rotor			54–45	8
Rotor			61–30	1
Rotor			100–19	1
Rotor			117–44	1
Screw			101–3	12
Screw			101–117	24
Screw			101–228	6
Screw			101–73	4
Screw			118–33	4
Screw			101–13	28
Screw			118–7	30
Screw			101–22	2
Screw			101–99	1
Screw			2–29	20
Screw			101–115	4

PART NUMBER	STOCK NO.		FIG. & INDEX	TOTAL PER EQUIP
	CODE	SERIAL		
Screw			66–394	4
Screw			124–25	6
Screw			98–23	4
Screw			98–14	4
Screw			2–54	5
Screw			7–20	10
Screw			7–65	10
Screw			7–70	15
Screw			7–49	10
Screw			7–33	15
Screw			7–57	10
Screw			7–24	10
Screw			7–18	20
Screw			101–31	1
Screw			7–3	10
Screw			2–71	40
Screw			2–2	40
Screw			2–202	40
Screw			2–361	44
Screw			28–64	20
Screw			2–206	42
Screw			128–29	1
Screw			90–209	8
Screw			81–77	1
Screw			59–45	40
Screw			89–4	4
Screw			58–30	8
Screw			81–99	8
Screw			81–102	4
Screw			89–20	4
Screw			94–18	4
Screw			89–7	2
Screw			118–155	4
Screw			98–57	4
Screw			40–92	120
Screw			128–47	4
Screw			9–5	10
Screw			124–22	3
Screw			124–3	12
Screw			13–7	10
Screw			13–16	5
Screw			15–29	5
Screw			12–3	15
Screw			12–4	5
Screw			13–2	10
Screw			15–25	6
Screw			12–9	20
Screw			13–21	20
Screw			9–8	16
Screw			9–2	24
Screw			55–181	10
Screw			128–43	4
Screw			2–57	20
Screw			60–16A	6
Screw			41–20	9
Screw			30–9A	20
Screw			30–11	20
Screw			27–41	32
Screw			33–12	5
Screw			23–33	20
Screw			22–66	10
Screw			43–2	4
Screw			31–4	104
Screw			10–13	10
Screw			7–52	10
Screw			43–4	2
Screw			31–10	52
Screw			66–341	14
Screw			66–339	36
Screw			2–71	52
Screw			66–346A	56
Screw			66–345	14
Screw			71–358	72
Screw			66–353	20
Screw			66–29	8
Screw			66–70	20
Screw			66–67	8
Screw			30–22	10
Screw			93–3	8
Screw			34–75	13

PART NUMBER	STOCK NO. CODE	STOCK NO. SERIAL	FIG. & INDEX	TOTAL PER EQUIP
Screw			69-60	4
Screw			95-36	1
Screw			99-5	2
Screw			99-2	2
Screw			99-9	2
Screw			98-30	4
Screw			99-22	1
Screw			99-27	5
Screw			99-25	1
Screw			84-18	4
Screw			88-13	1
Screw			66-375	20
Screw			30-69	10
Screw			88-33	1
Screw			23-17	5
Screw			95-52	2
Screw			26-11B	152
Screw			2-21	52
Screw			35-68	186
Screw			7-73	101
Screw			60-26	52
Screw			101-129	26
Screw			106-62	14
Screw			83-10	8
Screw			119-15	4
Screw			120-37	4
Screw			101-261	12
Screw			35-199	52
Screw			29-50	20
Screw			123-59	4
Screw			36-68	38
Screw			12-14	15
Screw			94-6	2
Screw			101-122	2
Screw			53-5	42
Screw			117-10	2
Screw			98-45	1
Screw			99-31	2
Screw			13-10	5
Screw			7-6	60
Screw			7-62	5
Screw			7-43	20
Screw			127-3	4
Screw			69-18	2
Screw			73-18	1
Screw			129-52	2
Screw			102-139	2
Screw			40-60	20
Screw			30-28	69
Screw			30-5	100
Screw			28-138	185
Screw			28-100	122
Screw			17-97	303
Screw			129-60	2
Screw			30-102A	11
Screw			7-37	5
Screw			97-10	1
Screw Subassembly			8-6	5
Shelf			2-65	5
			3-66	
			4-68	
			5-	
			6-	
Shield			54-10	8
Shield			115-38	1
Sleeve			21-43	1
Sleeve			9-16	4
Sleeve Subassembly			8-7	5
Stator			53-35	5
Stator			54-46	8
Stator			61-31	3
Stator			100-20	1
Stator			117-45	1
Stator and Base			115-	1
Strip			67-25	4
Stud			118-94	2
			118-244	
Stud			66-401	2
			71-402	
Stud			118-251	1

PART NUMBER	STOCK NO. CODE	STOCK NO. SERIAL	FIG. & INDEX	TOTAL PER EQUIP
Stud			89-13	1
Stud			89-32	2
Stud			89-25	3
Stud			88-42	4
Stud			85-17	4
Stud			89-40	4
Stud			122-14	1
Stud			122-21	2
Switch			53-33	5
Transformer			89-43	1
Transformer			66-370	5
			66-372	
			71-364	
			71-366	
			71-368	
Transformer Subassembly			89-	1
Tube Assembly			86-	1
Voltage Regulator Subassembly			98-	1
Voltage Regulator Subassembly			99-	1
Washer			66-94	16
Washer			66-50	12
Washer			30-9B	20
Washer			4-74	8
Washer			66-163	22
Washer			32-79	30
Washer			40-141	12
Washer			71-30	16
Washer			124-11	5
Washer			101-200	2
Washer			101-124	4
Washer			71-95	6
Washer			66-314	12
Washer			2-361A	40
Washer			66-71	18
Washer			9-14	1
Washer			66-233	6
Washer			101-252	2
Washer			101-83	4
Washer			45-10	3
Washer			95-37	1
Washer			95-60	3
Washer			116-153	4
Washer			87-19	11
Washer			98-33	4
Washer			101-14	8
Washer			90-211	8
Washer			33-20	5
Washer			86-57	2
Washer			23-44A	10
Washer			2-72	123
Washer			58-32	4
Washer			2-170	40
Washer			41-17	3
Washer			85-10	1
Washer			23-4A	20
Washer			101-241	1
Washer			107-13	28
Washer			128-40	4
Washer			128-44	4
Washer			118-156	4
Washer			118-8	38
Washer			118-34	4
Washer			119-2	18
Washer			34-50A	1
Wave Guide Section			7-69	5
Wave Guide Section			10-16	5
Wave Guide Section			11-17	5
Wave Guide Section			15-30	1
Wave Guide Section			109-35	1
Wave Guide Section			110-20	1
Wave Guide Section			129-70	1
ABS 1/16-30			112-7	2
ABS1	8800	337360	38-164	12
			52-	
			64-	
			77-	
ABS10	8800	337380	38-	10

PART NUMBER	STOCK NO.		FIG. & INDEX	TOTAL PER EQUIP
	CODE	SERIAL		
ABS10 (Cont)			52–	
ABS15	8800	337385	58–17	4
			58–	
			59–	
			128–49	
ABS2	8800	337365	28–	20
			28–119	
			38–	
			52–8	
ABS3	8800	337370	77–	2
			128–	
ABS5	8800	337375	22–58	22
			52–	
			58–	
			62–	
			62–40	
			64–132	
			79–	
			79–11	
			90–	
			90–233	
			128–	
AG–132	8800	525107–255	118–134	2
			118–235	
AGS 1/4			38–	41
			52–	
AGS 1/2			38–	12
			52–	
			64–	
			105–	
AGS 3/4			64–	4
			77–	
			77–18	
AGS5			38–	5
AM1515–10M6	4248	AAF–140045	79–36	3
			79–37	
			79–38	
AM1515–30M6	4248	AAF–140004	79–31	5
			79–32	
			79–33	
			79–34	
			79–35	
AM1515–6M6	4248	AAF–140055	79–39	2
			79–40	
AN3028–1	4202		58–53	3
AN3057–10			3–443	6
AN3057–12	6500	000357	2–490	33
AN3057–14			101–301	5
AN3057–16	6500	000358	2–398	31
AN3057–20	6500	000362	2–514	8
AN3057–3			71–3	1
AN3057–4	6500	000353	101–266	4
AN3057–6	6500	000354	2–415	12
AN3057–8	6500	000355	2–454	16
AN3064–28			81–88	2
AN3066–20			120–40	2
AN3066–28			81–89	2
AN3102–10SL4P			112–19	2
AN3102–14S5P			17–274	10
AN3102–14S5S			2–428	17
AN3102–16–10P			27–32	8
AN3102–16–10S			2–429	11
AN3102–16S4P			76–82	1
AN3102–18–16S			27–33	12
AN3102–22–18S			105–150	1
AN3102–22–19P			123–70	1
AN3102–22–19S			63–37	3
AN3102–22–23P			39–119	5
AN3102–22–33P			17–273	16
AN3102–22–33S			2–473	40
AN3102–28–12S			38–191	5
AN3102–28–16P			62–12	4
AN3102–28–16S			63–31	2
AN3102–28–19P			120–6	1
AN3102–28–2P			22–10	29
AN3102–28–2S			64–47	3
AN3102–28–20S			118–138	1
AN3102–32–12P			38–195	6
AN3102A–10SL3P			114–14	1
AN3102A–16S1P			126–14	1

PART NUMBER	STOCK NO.		FIG. & INDEX	TOTAL PER EQUIP
	CODE	SERIAL		
AN3102A–16S1S			106–130	1
AN3102A–22–18P			106–131	1
AN3102PR–28–19P			118–24	1
AN3106–10SL3S			114–13	1
AN3106–12S3S			101–262	1
AN3106–14S5P			2–422	17
AN3106–14S5S			68–4	2
AN3106–16–10P			2–470	16
AN3106–16–10S			2–455	7
AN3106–16S1P			101–270	1
AN3106–16S1S			101–272	1
AN3106–16S4P			92–35	1
AN3106–18–16P			2–449	11
AN3106–22–19P			57–17	3
AN3106–22–19S			101–282	1
AN3106–22–23P			2–509	5
AN3106–22–33P			2–519	35
AN3106–22–33S			2–491	17
AN3106–28–12S			57–8	1
AN3106–28–16P			57–14	2
AN3106–28–16S			57–11	2
AN3106–28–19S			101–297	2
AN3106–28–2P			57–31	3
AN3106–28–2S			2–399	18
AN3106–28–20S			101–299	1
AN3106–32–12P			2–517	5
AN3106–32–12S			2–515	5
AN3106A–10SL4S			112–50	1
AN3106A–22–18P			101–288	1
AN3106A–22–18S			101–284	1
AN3106A–28–2S			101–291	1
AN3108–14S5S			2–416	5
AN3108–16S4S			75–77	1
AN3108–22–33S			74–11	1
AN3108–28–16S			74–16	2
AN3108–28–2S			2–478	11
AN3108A–10SL4S			101–264	1
AN316–4R			114–5	1
AN325–12			98–2	4
AN335–10			66–396	8
AN335–8			2–30	26
AN340–10			2–140	263
AN340–4			2–122	1521
AN340–416			2–28	816
AN340–5			2–192	15
AN340–516			2–204	136
AN340–6			2–212	2859
AN340–616			2–143	221
AN340–8			2–35	1414
AN340C516			118–9	22
AN345–10			2–7	3203
AN345–4			38–92	10
AN345–416			62–73	20
AN345–6			30–86	5
AN345–8			53–32	94
AN363–1032			113–8	12
AN365–440			112–21	6
AN365–832			115–22	1
AN380–2–1			88–31	1
AN385A70–3			124–14	1
AN500–4–4			7–29	22
AN500–416–12			69–30	12
AN500–8–14			115–11	2
AN500–8–6			115–44	1
AN500A4–4			114–15	4
AN500A4–5			115–41	4
AN500A6–3			115–20	6
AN500A6–5			114–6	2
AN500A6–7			114–3	4
AN500A8–12			115–34	4
AN500B4–3			114–17	1
AN500B416–12			91–46	8
AN500C4–7			129–6	2
AN501–10–7			30–91	5
AN504–4–4			9–12	12
AN504–4–5			129–72	4
AN504–6–5			61–27	6
AN504–6–6			53–30	13
AN504–8–6			100–15	2
AN504C4–5			22–80	44

PART NUMBER	STOCK NO.		FIG. & INDEX	TOTAL PER EQUIP
	CODE	SERIAL		
AN504C4R4			27–65	98
AN504C4R5			22–64	40
AN505–10–10			2–151	5
AN505–10–8			2–152	5
AN505–10R8			105–63	20
AN505–4–20			115–49	6
AN505–4–3			30–121	150
AN505–4–5			115–47	6
AN505–4–7			39–32	20
AN505–4R10			2–120	20
AN505–4R5			107–130	20
AN505–4R6			102–121	10
AN505–416–10			90–199	4
AN505–416–12			53–6	32
AN505–416–14			91–42	53
AN505–416R10			2–117	39
AN505–416R14			55–111	35
AN505–416R16			91–21	32
AN505–416R8			71–103	7
AN505–6–12			115–26	3
AN505–6–4			69–15	6
AN505–6–5			66–33A	5
AN505–6–6			67–7	183
AN505–6–7			29–13	40
AN505–6–8			30–105	30
AN505–6R10			16–12	162
AN505–6R12			101–82	4
AN505–6R5			40–12	12
AN505–6R6			16–16	74
AN505–6R7			2–108	45
AN505–6R8			55–14	130
AN505–616–16			117–11	4
AN505–8–6			28–130	45
AN505–8–7			2–32	40
AN505–8–8			29–10	47
AN505–8R10			64–84	2
AN505–8R5			17–82	6
AN505–8R6			59–29	4
AN505–8R8			55–121	100
AN505B416R8			66–108	4
AN505B6–5			92–99	9
AN505B6–7			92–39	30
AN505B6R7			105–58	2
AN505B8–5			62–30	1
AN507–1024–5			84–4	4
AN508–10–5			128–32	12
AN508–6–4			22–22	304
AN508–8–5			65–16	108
AN510–10–10			91–23	4
AN510–10–12			51–8	47
AN510–10–20			39–101	10
AN510–10–5			2–133	36
AN510–10–6			90–59	2
AN510–10–7			2–160	21
AN510–10–8			2–142	42
AN510–10R10			39–145	76
AN510–10R12			102–117	4
AN510–10R14			102–88	2
AN510–10R16			67–12	16
AN510–10R18			101–219	1
AN510–10R6			2–285	23
AN510–10R7			2–64B	27
AN510–10R8			2–172	215
AN510–3R4			126–108	8
AN510–416R8			3–104	12
AN510–6R6			102–100	4
AN510B10R16			103–9	8
AN510B3R6			82–27	8
AN515–10–10			85–44	23
AN515–10–12			98–49	4
AN515–10–14			88–27	3
AN515–10–16			86–12	6
AN515–10–20			85–32	2
AN515–10–24			99–20	2
AN515–10–6			54–2	42
AN515–10–8			129–46	3
AN515–2–5			67–27	120
AN515–2–6			67–42	16
AN515–2R4			119–7	34
AN515–3–4			8–11	25

PART NUMBER	STOCK NO.		FIG. & INDEX	TOTAL PER EQUIP
	CODE	SERIAL		
AN515–3R5			2–373	60
AN515–4–10			66–18	1
AN515–4–12			21–51	10
AN515–4–14			71–161	4
AN515–4–16			69–56	24
AN515–4–20			34–55A	10
AN515–4–3			32–31	176
AN515–4–4			17–280	648
AN515–4–5			19–9	453
AN515–4–6			19–13	409
AN515–4–7			28–90	54
AN515–4–8			30–59	52
AN515–4R10			71–43	2
AN515–4R12			123–32	2
AN515–4R3			17–141	6
AN515–4R4			17–344	178
AN515–4R5			17–276	100
AN515–4R6			2–184	209
AN515–4R7			106–134	12
AN515–4R8			105–151	4
AN515–416–10			2–220	147
AN515–416–12			66–158	51
AN515–416–14			79–114	12
AN515–416–16			69–26	4
AN515–416–20			8?–8	2
AN515–416–6			39–76	33
AN515–416–7			66–229	4
AN515–416–8			66–157	69
AN515–416R10			2–90	29
AN515–416R12			55–116	118
AN515–416R14			2–26	56
AN515–416R24			102–70	8
AN515–416R6			22–8	55
AN515–416R7			71–416	18
AN515–416R8			2–96	101
AN515–5–12			2–191	5
AN515–5–8			85–9	1
AN515–516–8			85–28	4
AN515–6–10			22–19	92
AN515–6–12			18–26	24
AN515–6–16			30–49	26
AN515–6–18			27–9	52
AN515–6–20			2–270	20
AN515–6–28			84–13	4
AN515–6–3			32–108	101
AN515–6–4			21–28	648
AN515–6–5			20–10	542
AN515–6–6			2–316	464
AN515–6–7			2–210	152
AN515–6–8			36–41	35
AN515–6R10			39–152	122
AN515–6R12			2–307	163
AN515–6R14			17–58	4
AN515–6R16			40–140	14
AN515–6R18			3–270	34
AN515–6R20			2–393	50
AN515–6R4			2–290	997
AN515–6R5			17–25	185
AN515–6R6			40–104	184
AN515–6R7			2–275	54
AN515–6R8			126–115	3
AN515–616–12			3–216	18
AN515–8–10			63–129	27
AN515–8–12			2–312	54
AN515–8–16			66–103	16
AN515–8–4			25–5	210
AN515–8–5			2–33	195
AN515–8–6			28–62	349
AN515–8–7			17–320	606
AN515–8–8			29–6	59
AN515–8R10			59–20	38
AN515–8R12			41–10	34
AN515–8R14			101–19	8
AN515–8R16			101–35	8
AN515–8R18			101–144	2
AN515–8R28			125–23	6
AN515–8R32			116–152	2
AN515–8R4			2–45	179
AN515–8R5			40–135	77
AN515–8R6			2–194	176

PART NUMBER	STOCK NO.		FIG. & INDEX	TOTAL PER EQUIP
	CODE	SERIAL		
AN515-8R7			40-68	76
AN515-8R8			16-25	449
AN515B4-5			39-41	14
AN515B4-6			28-97	67
AN515B4-7			62-5	26
AN515B4R4			50-25	6
AN515B4R5			17-137	6
AN515B4R6			17-123	2
AN515B4R8			108-23	9
AN515B416-10			91-17	8
AN515B416-7			66-409	7
AN515B416-8			91-13	3
AN515B416R7			7-416	123
AN515B416R8			102-28	1
AN515B6-10			56-33	10
AN515B6-12			81-39	4
AN515B6-14			51-4	20
AN515B6-4			66-378	40
AN515B6-5			38-141	26
AN515B6-8			112-17	4
AN515B6R10			105-47	3
AN515B6R12			56-29	12
AN515B6R5			17-114	3
AN515B6R7			106-26	6
AN515B8-12			50-30	24
AN515B8-14			81-48	2
AN515B8-5			64-78	48
AN515B8-6			30-44	48
AN515B8-7			63-65B	4
AN515B8-8			29-30	63
AN515B8R12			108-11	8
AN515B8R14			58-40	2
AN515B8R16			103-22	4
AN515B8R5			108-37	4
AN515B8R6			58-3	20
AN515B8R7			108-44	4
AN515B8R8			58-44	2
AN515C516-18			118-46	8
AN520-10-10			66-132	83
AN520-10-12			18-3	34
AN520-10-14			66-181	12
AN520-10-16			66-180	22
AN520-10-18			66-49	14
AN520-10-20			86-51	1
AN520-10-4			30-13	41
AN520-10-5			2-135	97
AN520-10-6			2-357	265
AN520-10-7			17-297	565
AN520-10-8			30-37	346
AN520-10R10			2-5	238
AN520-10R12			23-50	21
AN520-10R14			101-24	8
AN520-10R16			101-153	5
AN520-10R20			118-199	12
AN520-10R4			4-132	4
AN520-10R5			2-322	208
AN520-10R6			2-380	252
AN520-10R7			2-11	298
AN520-10R8			2-23	769
AN520-12-8			32-6	10
AN520-3-3			45-24	12
AN520-3-4			2-241	349
AN520-3-5			2-464	100
AN520-3-6			35-136	23
AN520-3R4			17-271	80
AN520-3R5			40-77	36
AN520-3R6			40-61	24
AN520-416-6			81-79	8
AN520-416-8			67-48	26
AN520-6-4			53-17	26
AN520-6-7			117-37	2
AN520B10-36			63-47	2
AN520B10-5			52-24	20
AN520B10-6			50-6	169
AN520B10-7			22-33	291
AN520B10-8			35-12	148
AN520B10R10			105-9A	5
AN520B10R16			55-19	30
AN520B10R5			102-45	4
AN520B10R6			55-2	759

PART NUMBER	STOCK NO.		FIG. & INDEX	TOTAL PER EQUIP
	CODE	SERIAL		
AN520B10R7			2-48	113
AN520B10R8			2-51	71
AN520B3-4			66-426	16
AN520B3-5			66-26	72
AN520B3-6			35-25	80
AN520B3R5			106-14	8
AN520B3R6			82-28	24
AN520B416-10			66-392	8
AN526-420-8			95-12	24
AN535-00-2			43-8	8
AN535-00-3			7-55	15
AN565A2H2			8-4	5
AN565A516H10			98-26	1
AN5771-3A			112-16	1
AN6227-12			129-59	2
AN6227-25			115-8	2
AN6227-5			114-7	19
AN6227-8			109-14	28
AN6230-33			118-36	1
AN6230-43			118-121	1
AN74A3			112-54	4
AN816-2D			112-36	1
AN816-4D			112-41	1
AN822-2D			112-33	3
AN823-4D			112-29	1
AN832-4D			112-38	1
AN913-1D			113-4	1
AN914-1D			112-31	2
AN915-1D			112-30	1
AN918-1D			112-[illegible]	1
AN924-4D			112-39	1
AN931-8S13			112-28	1
AN935-10			2-381	295
AN935-10L			54-13	32
AN935-1016			89-33	4
AN935-1216			98-3	2
AN935-2			7-53	10
AN935-4			7-30	94
AN935-4L			112-24	17
AN935-416			7-21	158
AN935-5			90-8	20
AN935-516			89-5	16
AN935-6			13-17	33
AN935-6L			124-18	4
AN935-616			89-8	32
AN935-8			7-50	130
AN935-8L			9-6	14
AN935-816			89-14	12
AN935-B10			85-34	22
AN935B10B			86-5	7
AN935B416			83-6	97
AN935B5			85-11	1
AN935B516			85-18	8
AN935B6			84-8	4
AN935B8			86-24	24
AN936A10			30-14	31
AN936A10B			2-323	550
AN936A1016			38-180	79
AN936A2			67-28	136
AN936A3			21-34	262
AN936A4			17-138	26
AN936A4B			17-124	159
AN936A416			26-78A	45
AN936A416B			66-38	118
AN936A516B			92-96	3
AN936A6			69-6	25
AN936A6B			17-115	326
AN936A616			30-7	20
AN936A616B			17-68	234
AN936A8			43-14	3
AN936A8B			25-6	353
AN936B10			17-9	430
AN936B10B			2-6	3834
AN936B3B			106-15	8
AN936B4			30-50	114
AN936B4B			2-121	2232
AN936B416			4-3	314
AN936B416B			2-3	908
AN936B516			30-54	48
AN936B516B			2-203	120

PART NUMBER	STOCK NO. CODE	STOCK NO. SERIAL	FIG. & INDEX	TOTAL PER EQUIP
AN936B6			30–95	307
AN936B6AB			2–311	320
AN936B6B			2–211	4826
AN936B616			27–31	72
AN936B616B			2–207	121
AN936B8			39–90	28
AN936B8B			2–34	2476
AN936C6B			55–15	50
AN936C8B			35–164	20
AN939B6B			123–90	1
AN945–4P			23–40	20
AN945–6			94–20	4
AN960–10			2–100	107
AN960–10L			13–19	84
AN960–4			19–10A	8
AN960–416			2–58	56
AN960–416L			85–56	6
AN960–516L			59–22	22
AN960–6			118–148	13
AN960–6L			84–9	8
AN960–616			2–144	15
AN960–616L			81–8	4
AN960–8			43–15	8
AN960–8L			13–3	39
AN960C10L			13–25	10
AN995C20			112–53	AR
AWS–30			112–2	2
A1034–1			13–11	5
A1056–1005			13–15	5
A1056–1007			11–9	5
A1056–1012			13–18	20
A1056–1022			10–11	5
A1056–1032			15–17	1
A1056–1034			15–18	1
A1056–1035			10–14	5
A1056–1038			10–3	5
A1056–1043			13–6	5
A1056–1047			12–8	5
			15–8	
A1056–1051			12–1	5
			15–1	
A1056–1054			9–11	4
A1056–1058			13–27	5
A1056–1059			13–23	5
A1056–1060			13–26	5
A1056–1071			14–11	1
A1056–1078			13–12	5
A1056–110			13–	5
A1056–24			13–1	5
A1056–31			13–9	5
A1056–34			10–10	5
A1056–46			11–16	5
A1056–48			11–14	5
A1056–5			13–14	5
A1056–53			11–15	5
A1056–68			12–13	5
			15–13	
A1056–70			10–12	5
A1056–76			15–24	1
A1056–79			12–11	5
			15–11	
A1056–8			13–5	5
A1056–89			124–1	2
A1334–10			124–20	1
A1334–45			124–21	1
A1334–9			124–26	1
A1509–102			124–12	1
A1509–104			124–13	1
A1509–15			124–16	1
A1509–21			124–8	1
A1509–25			124–24	1
A1912–107			124–2	1
A2980S–3			95–15	4
			95–66	
A3046S6–199			95–70	2
			96–6	
A321			86–34	3
A40017			129–51	2
A40033			129–53	1
A40034			129–54	1

PART NUMBER	STOCK NO. CODE	STOCK NO. SERIAL	FIG. & INDEX	TOTAL PER EQUIP
A4059			99–33	2
A40662			129–55	1
A4138			99–32	2
A41904			129–58	2
A41908			129–65	4
A41909			129–64	2
A42146			129–45	1
A42363			129–44	1
A42447			129–34	1
A42456			129–42	4
A42500–A			129–21	1
A42500–B			129–32	1
A42500–C			129–15	1
A42500–D			129–26	1
A42500–E			129–39	1
A42500–F			129–40	1
A42500–G			129–20	1
A42500–H			129–31	1
A42500–J			129–16	1
A42500–K			129–27	1
A42500–L			129–22	1
A42500–M			129–33	1
A42500–N			129–41	1
A43924			129–71	1
A43926			129–57	2
A7009571P1			128–38	2
A7009746P1			125–2	2
			125–9	
A7009747			126–121	2
A7009750P1			125–1	2
			125–8	
A7009751P1			125–6	2
			125–13	
A7009755P1			125–7	2
			125–14	
A7009756P1			125–5	2
			125–12	
A7009758P1			125–21	2
A7009759P1			125–17	1
A7009760P1			125–19	1
A7009762P1			125–20	1
A7009936			9–3	16
A7009936P3			107–2	10
A7010185P1			123–35	1
A7010215P1			118–130	1
A7010280P3			101–132	3
A7010321P1			26–1B	20
A7010360P1			126–122	1
A7010361P1			126–123	1
A7010584P4			126–7	5
A7010681P1			123–93	4
A7010876P2			106–149	1
A7011989P1			122–2	1
A7012340			34–82A	5
A7012378P1			116–129	1
A7012379P1			116–145	1
A7012397P1			128–34	12
A7012401P2			123–53	2
			123–55	
A7012543P1			109–29	28
A7012581P1			109–13	14
A7012753P2			121–31	1
A7012790P1			40–59	3
A7012796P1			108–3	2
A7013299P1			105–170	6
A7013564P1			101–250	1
A7013798P2			101–211	1
A7013799P1			101–213	1
A7013872P1			101–216	1
A7013899P1			120–41	1
A7013911P1			118–89	1
A7013917P1			118–165	1
A7014055P1			118–12	1
A7014057P1			118–16	1
A7014058P1			118–11	1
A7014073P1			118–236	1
A7014073P2			118–135	1
A7014216P1			118–144	1
A7014273P1			126–139	1
A7015122P1			118–224	1

PART NUMBER	STOCK NO.		FIG. & INDEX	TOTAL PER EQUIP
	CODE	SERIAL		
A7015123P1			118–223	1
A7016628P1			118–40	1
A7016875P2			101–	1
A7016992P1			58–28E	2
			81–5B	
A7016993P1			58–28D	2
			81–5A	
A7017050P1			102–141	1
A7017051P1			102–159	1
A7017052P1			102–152	1
A7017053P1			102–132	1
A7017054P1			102–128	1
A7017055P1			102–127	1
A7017057P1			102–138	1
A7017058P1			102–145	1
A7017059P1			102–142	1
A7017060P1			102–146	1
A7017062P1			103–8	8
			104–8	
A7017066P1			102–61	1
A7017071P1			102–97	2
A7017072P1			102–101	4
A7017073P1			102–104	8
A7017079P1			102–112	1
A7017080P1			102–124	1
A7017081P1			102–87	1
A7017082P1			102–84	2
A7017158			101–170	1
A7019006P1			128–37	12
A7019025P1			125–18	1
A7019407P2			101–204	1
A7019408P1			101–205	1
A7019458P1			30–107	5
A7019464P1			101–119	1
A7019465P1			101–120	1
A7019467P1			101–186	1
A7019468P1			101–182	1
A7019470P1			101–127	1
A7019473P1			101–72	1
A7019474P1			101–75	1
A7019718P1			105–57	1
A7019719P1			101–242	1
A7020393P1			101–11	1
A7020394P1			101–12	1
A7021710P1			109–32	1
A7021791P1			127–36	1
A7021792P1			127–9	1
A7021793P1			127–29	1
A7021794P1			127–15	1
A7021795G1			127–2	1
A7021795P1			127–13	1
A7021796P1			127–4	1
A7021797P1			127–33	1
A7021798P1			127–19	1
A7021798P2			127–8	1
A7021799P1			127–11	1
A7021900P1			127–34	1
A7021901P1			101–181	1
A7021902P1			101–182	1
A7021903P1			101–177	1
A7021907P3			127–23	1
A7021916P1			101–100	1
A7021916P2			101–104	1
A7021917P1			101–98	1
A7021918P1			101–103	1
A7021920P1			101–107	1
A7021943			127–7	2
			127–18	
A7021944P1			101–203	1
A7021947P1			101–198	1
A7022301P1			101–94	4
A7022302P1			101–93	1
A7135118P1			107–21	24
			107–103	
A7135118P2			106–104	8
			106–132	
			118–111	
			123–83	
A7135276P1			101–80	2
A7410551P1			102–130	1

PART NUMBER	STOCK NO.		FIG. & INDEX	TOTAL PER EQUIP
	CODE	SERIAL		
A7874555P20			118–90	39
			118–93	
			118–98	
			118–192	
			118–198	
			118–204	
			118–209	
			118–226	
			118–243	
A7874555P6			105–167	6
A817116			96–24	1
A817121	3300	399675236	95–20	12
			95–21	
			95–22	
			95–23	
			95–24	
			95–25	
			95–26	
			95–27	
			95–28	
			95–29	
			95–30	
			95–31	
A817125	3300	293526344	95–110	1
A817126	3300	293539867	95–108	1
A817128			95–89	1
A817129			94–5	1
A817131A			95–107	1
A817133			95–54	1
A81722			95–32	1
A81723	8800	153840	95–11	24
			95–40	
A81725	3300	293526344	95–56	1
A81726			95–57	1
A81727			95–38	1
A81730	3300	331087502	95–58	3
A81731			95–86	1
A81734			95–61	1
A81739			95–78	2
A81740			94–10	1
A81741A			95–	1
A81747			95–97	1
A81749			95–48	12
			95–63	
A81760	8800	361212	95–105	2
			95–	
A81768			96–5	2
A81777	3300	293526345	95–35	1
A81778			95–5	1
A81780			95–51	1
A81783A			95–44	1
A821–37			10–8	10
A822–18			10–9	10
A83054			96–17	3
A84515			95–10	24
			95–39	
A927–1			66–382	11
			66–421	
			71–378A	
			71–429	
			85–43	
BC–80W–PP			123–91	1
B0H06A120	3300	299848056	39–84	29
			65–38	
			65–39	
			75–81	
			75–82	
			75–83	
			75–84	
			75–118	
			75–119	
			75–120	
			75–121	
			79–82	
			79–83	
			79–84	
			79–85	
			79–86	
			79–87	
			79–88	
			79–89	

PART NUMBER	STOCK NO. CODE	STOCK NO. SERIAL	FIG. & INDEX	TOTAL PER EQUIP
B0H06A120 (Cont)			79–90	
			79–91	
			81–109	
			81–110	
			90–165	
			90–166	
B0HX–26			116–55	1
BTS–1/2	3300	381170020	95–77	1
B1056–156			9–1	6
B1056–170			9–10	5
B1056–190			9–4	18
B1056–194			13–	10
B2R53P3			116–69	1
B2R53P5			116–70	2
B25652			129–67	1
B41910			129–61	2
B42357			129–56	2
			129–	
B42457			129–	1
B42458			129–	1
B42459			129–	1
B42462			129–	1
B42463			129–	1
B7406968			122–4	1
B7407421P1			101–33	1
B7407455P1			109–6	1
B7407474P2			106–12	1
B7407564P1			121–1	1
B7408180P1			30–90	5
B7408501			126–105	1
B7408526			39–155	5
B7408547			39–150	10
B7408751P1			101–69	1
B7408766P17			118–35	1
B7408766P18			118–120	1
B7408783P2			118–107	1
B7408835P1			32–71	5
B7409540P2			101–140	1
B7409553P2			126–98	1
B7409591P2			127–28	1
B7409591P3			127–24	1
B7410000P1			118–208	1
B7410552P1			102–163	1
B7410552P2			102–162	1
B7410554P1			102–8	1
B7410556P2			103–16	1
B7410556P3			103–15	1
B71410557P2			104–16	1
B7410557P3			104–15	1
B7410558P1			102–22	1
B7410562P1			102–74	1
B7410562P2			102–76	1
B7410564P1			102–65	1
B7410565P1			102–111	1
B7410565P2			102–136	1
B7410565P3			102–110	1
B7410565P4			102–105	1
B7410572P1			116–23	1
B7411315P3			101–87	4
B7511339P1			101–71	1
B7411344P1			118–10	1
B7411452P1			101–92	1
B7412455P1			102–4	1
B81703			95–79	1
B81704			95–80	1
B81706			95–1	1
B817127			95–111	1
B81724			94–1	1
B81732			95–	1
B81750A			95–6	1
B81750AP14			96–22	1
C–6363–1–10			108–42	1
C–6363–1–5			108–43	1
CC21CJ100C			123–107	1
CC21CK050C			123–120	1
CC21UJ100D	3300	313004685	37–98	14
CC21UJ100G			36–107	5
CC21UJ150J	3300	313090530	44–22	21
CC21UJ407K			34–57B	5
CC21UJ470K	3300	318430205	21–104	4

PART NUMBER	STOCK NO. CODE	STOCK NO. SERIAL	FIG. & INDEX	TOTAL PER EQUIP
CC21UJ510J	3300	313584215	21–99	73
CC21VK050C	3300	312860690	46–131	3
CC26UJ560G			34–57A	5
CC26UK101J	3300	313889955	21–93	107
CC26UK680J	3300	313625830	47–112	9
CE41C122F	3300	317630207	28–293	13
CE51C250M			107–78	1
CE51C500M			107–76	1
CE52C550J			107–77	1
CM20B100K			123–122	1
CM20C101J	3300	376002800	107–200	3
CM20C151J	3300	313996000	107–201	1
CM20C270J			123–119	1
CM20C330J			123–110	1
CM20D221J	3300	376017410	37–94	5
CM20D331J	3300	376026880	17–353	11
CM20D471J	3300	376036015	26–80	91
CM30D102J	3300	376120810	17–148	32
CM30D102K			121–20	1
CM30D152J	3300	376125200	107–196	1
CM30D222J	3300	376130080	17–355	12
CM30D302J	3300	376133009	17–354	1
CM35B103K	3300	376144024	21–105	34
CM35B682M	3300	376155830	34–91	15
CM35D472J	3300	376151840	28–313	71
CM50B222K			27–39	10
CM55B101K	3300	376285600	66–137	6
CP07SA1			28–269	20
CP07SA2			118–247	2
CP07SA3			17–32	95
CP07SA5			28–286	10
CP07SB3			69–68	6
CP07SB6			17–46	26
CP07SC2			2–148	43
CP07SC4			28–284	12
CP07SD5			39–81	24
CP26A1EF103V	3300	316774848	17–340	50
CP26A1EF104K	3300	316777655	78–21	12
CP26A1EF104V			123–77	40
CP26A1EF203K	3300	315993180	36–77	5
CP26A1EF503K	3300	317704024	39–135	9
CP26A1BF503V			123–76	1
CP26A1EG103K	3300	317680850	32–116	5
CP28A1EF104K			35–158	5
CP53B1FF105K	3300	316958815	64–74	3
CP53B1FF205K			17–288	4
CP53B1FF503K	3300	312922272	21–48	1
CP53B1FF504K	3300	319001041	2–193	6
CP53B4FF104V	3300	316777592	40–114	6
CP54B1FF205K	3300	317094955	35–217	5
CP54B4FF503V	3300	317704027	32–104	5
CP54B4FG104V	3300	317760046	28–194	45
CP54B5FF104V	3300	317760029	36–73	5
CP54B6FF504V			116–108	1
CP55B1FF503K	3330	316163471	47–65	3
CP63B1FF105K			118–260	2
CP63B1FG504K	3300	319001160	2–208	10
CP65B1FE105K			116–19	1
CP65B1FF105K	3300	316958665	36–44	15
CP65B1FF254K	3300	318001182	17–69	16
CP65B1FF504K	3300	319001089	21–27	15
CP65B1FG254K	3300	318001147	107–64	1
CP65B1FG504K			107–59	4
CP65B6FF104V	3300	317760028	36–45	5
CP70B1FF105K			17–28	4
CP70B1FF106K	3300	317440912	28–283	10
CP70B1FF205K	3300	317095004	28–262	34
CP70B1FF405K	3300	317642947	69–67	2
CP70B1FF605K	3300	317276505	22–14	11
CP70B1FF805K	3300	317371335	2–145	30
CP70B1FG104K	3300	317760047	28–264	10
CP70B1FG105K			118–245	1
CP70B1FG106K	3300	317440987	39–80	13
CP70B1FG205K	3300	317095013	28–282	5
CP70B1FG405K	3300	317642964	17–45	2
CP70B1FH504K	3300	319005270	27–16	5
CR5181–2R26	3300	294917477	85–24	1
CT1C025	3300	313178250	45–19	6
CT1C040	3300	313410135	47–86	3
CV11B130	3300	313050138	34–53	10

PART NUMBER	STOCK NO. CODE	STOCK NO. SERIAL	FIG. & INDEX	TOTAL PER EQUIP
CW–123/U			2–348	44
C1056–179			12–16	4
C1056–180			9–7	8
			12–	
C1056–189			14–4	2
			15–	
C1126	8850	288500	2–336	17
			2–338	
			3–329	
			4–331	
			4–338	
			5–	
			6–	
			60–9	
			60–11	
			60–13	
			82–3	
			90–46	
			92–107	
			92–108	
C1128	8850	597750	2–337	10
			3–330	
			4–332	
			5–	
			6–	
			60–2	
			60–3	
			60–5	
			71–461	
			85–47	
C1130			85–49	3
			128–27	
			128–28	
C1143	8850	584851	60–7	11
			60–8	
			60–10	
			60–12	
			82–2	
			82–6	
			82–7	
			82–8	
			82–9	
			82–10	
			82–16	
C1145	8850	596800	60–4	6
			60–6	
			66–444	
			82–4	
			82–5	
			128–26	
C1149	8850	504490	2–335	5
			3–328	
			4–330	
			5–	
			6–	
C1151	850	497560	82–11	7
			82–12	
			82–13	
			82–14	
			82–15	
			82–17	
			85–48	
C1252			98–4	1
C1253			98–6	1
C12534B			10–1	5
C12534C			10–2	11
			11–2	
			15–16	
C12534I			10–7	11
			11–6	
			15–23	
C1254			98–5	1
C1912–108A			124–27	1
C1912–110B			101–151	1
C2587AE			11–12	5
C2587AF			11–11	5
C2587AG			11–13	5
C2587AI			10–5	11
			11–4	
			15–21	
C2587AJ			10–6	11

PART NUMBER	STOCK NO. CODE	STOCK NO. SERIAL	FIG. & INDEX	TOTAL PER EQUIP
C2587AJ (Cont)			11–5	
			15–22	
C2587J			10–4	11
			11–3	
			15–20	
C2587N			11–10	5
C41809			129–1	1
C41936			129–48	1
C42461			129–	1
C7704076P1			105–8	1
C7704078P1			105–61	1
C7704078P2			105–62	1
C7704224P1			106–63	1
C7704224P2			106–64	1
C7704233P2			106–3	1
C7704915P43			107–218	1
C7705010P1			118–191	1
C7705950P1			102–133	1
C7706388P10			127–12	1
C7706388P11			127–32	2
C7706391P13			101–102	2
			101–106	
C7707213P1			118–117	1
C817120			96–	1
C81715			94–	1
D–207			107–144	6
			107–145	
			107–146	
			107–147	
			107–148	
			107–149	
DA045–001			121–2	1
DL9268574			83–	1
DL9268593G3			118–6	1
D102A			26–24	5
D102B			21–36	21
			32–41	
			32–48	
			44–46A	
			47–48	
			106–85	
D1056–135			4–4	2
D1056–165			2–4	8
			5–	
D1056–169			13–31	5
D1056–170			13–	5
D207			123–51	3
			123–52	
			123–54	
D41790			129–	1
D6493			116–10	1
D7603894G1			128–1	1
D7603959P2			102–25	1
D81701A			93–2	2
			95–	
D97B			35–178	25
			36–82	
E1736–1			71–25	4
			71–26	
			71–35	
			71–36	
E7300889P78			101–47	1
E7300892P132			118–225	1
E7300892P59			118–114	1
E7301656P10			102–58	1
E7301656P89			102–131	1
FA75			23–5	5
FPE25–11	3300	348142670	42–	3
FPE25–22	3300	348136726	31–	10
G142			23–24	5
G143			23–43	10
G464			7–5	5
HCM–R	8800	619703–75	22–57	219
			28–118	
			28–121	
			38–163	
			38–166	
			38–167	
			38–168	
			38–169	

PART NUMBER	STOCK NO. CODE	STOCK NO. SERIAL	FIG. & INDEX	TOTAL PER EQUIP
HCM–R (Cont)			38–170	
			38–171	
			38–172	
			38–173	
			38–174	
			38–175	
			38–176	
			38–177	
			38–178	
			38–179	
			39–25	
			39–28	
			52–7	
			58–16	
			58–18	
			58–20	
			58–21	
			62–39	
			62–42	
			64–133	
			64–135	
			64–137	
			64–138	
			64–140	
			64–141	
			64–142	
			64–143	
			64–144	
			64–145	
			64–163	
			64–165	
			64–167	
			64–169	
			77–17	
			77–22	
			77–24	
			77–26	
			79–12	
			79–14	
			79–17	
			79–19	
			90–230	
			90–234	
			105–25	
			105–28	
			105–30	
			105–31	
			105–33	
			112–6	
			112–8	
			128–48	
			128–51	
			128–53	
			128–55	
HGS–1/4			105–	1
HK7T/RK5586	3300	235793058	2–22	2
			5–	
HM3ET			108–25	1
HP–908			98–27	1
HP755–2			12–2	5
			15–2	
H101631P7			117–46	1
H101631P8			117–6	1
H55S420SNL			107–129	6
H85065P3			53–36	8
			61–32	
H85065P7			53–2	8
JX65A	3300	396501248	2–213	37
			2–214	
			3–213	
			3–214	
			4–215	
			4–216	
			5–	
			6–	
			66–436	
			66–437	
			66–438	
			66–439	
			66–440	
			66–441	

PART NUMBER	STOCK NO. CODE	STOCK NO. SERIAL	FIG. & INDEX	TOTAL PER EQUIP
JX65A (Cont)			65–442	
			66–443	
			71–454	
			71–455	
			71–456	
			71–457	
			71–458	
			71–459	
			71–460	
			120–21	
			120–22	
			120–23	
			120–24	
			120–25	
			120–26	
			120–27	
			120–28	
			120–29	
			120–30	
			120–31	
			120–32	
J36	3300	347082116	41–9	6
			43–	
K105			66–4	AR
			66–10	
			66–14	
			66–78	
K12–3A	3300	387334100	118–181	1
K17–3A	8800	149932	39–143	15
K17–4A	8800	149933–4	39–144	15
K17–7A	8800	149933	66–155	37
			66–306	
			71–155	
			71–290	
			87–6	
			118–178	
K17–8A	8800	149933–5	87–7	4
			87–10	
K173A–15			128–42	1
K173A–20			128–41	1
K2418238P1			101–123	1
K2529813P22			97–12	1
K2795	3300	296949046	2–200	5
			3–200	
			4–202	
			5–	
			6–	
K33405			118–97	1
K37212	8850	234780	2–80	5
			3–81	
			4–83	
K5826908AAP3			54–20	8
K5826908AA1			53–18	5
K5826926AA			54–6	8
K5826927AA			117–17	1
K5826928AAP18			117–18	1
K5826928AAP21			54–7	8
K5826943ABP21			53–14	20
K5826943AB2B			54–12	32
K5826951AAP1			54–35	16
K5826951AA10			53–31	10
K5826986BTG5			54–	8
K5826987DKG2			54–	8
K5828716AAP2			54–9	18
			117–16	
K5828716AA2			53–11	6
			100–8	
K5828716AP10			61–11	6
K5828718AAP1			54–14	16
			54–23	
K5828719AA			54–16	16
			54–24	
K5828720AAP1			54–15	8
K5828721AAP2			53–19	16
			53–28	
			61–16	
			61–25	
K5828722AAP1			54–25	8
K5828723AAP1			54–26	8
K5828727AAP1			54–30	16
K5828745AAP1			54–17	8

PART NUMBER	STOCK NO.		FIG. & INDEX	TOTAL PER EQUIP
	CODE	SERIAL		
K5828745ABP1			54–18	8
K5828746AA1			53–23	5
K5828825AAP11			117–38	2
K5828825AAP3			54–39	16
K5828852AAP1			61–20	3
K5852794P4			54–38	16
K5852918AAP1			61–24	3
K5852919AAP1			61–23	3
K5852922ADP8			61–17	6
			61–21	
K5855005AAP7			100–12	2
			100–17	
K5855005AEP3			53–20	10
			53–24	
K5855011AA1			53–26	5
K5855012AA1			53–27	5
K5855014AA			53–22	AR
K5855014AA4			53–25	5
K5855034AA52			100–5	4
K5855034ABP58			61–14	12
K5855279ACP5			117–24	2
			117–29	
K5855340AA9			54–	8
K5855415AA			117–25	AR
			117–31	
K5855416AAP1			117–26	1
K5859370AAP10			117–22	4
K5859706AAP1			117–27	1
K5859846AAP4			54–21	16
			54–28	
K5859944AAP1			117–30	1
K5863310AA			61–19	AR
			61–22	
K5863525AA			61–28	3
K5863525AAG8			61–	3
K5863526AA1			61–29	3
K5863593AAP1			61–18	3
K5863652BLG4			61–	3
K5863653AMG3			61–	3
K5868589AA1			100–11	1
K5868596AAP3			53–16	5
K5868647ABG1			53–	5
K5893090AAG10			53–	5
K5893091AAG9			53–	5
K5893234BA6			100–	1
K5893268AA1			100–9	1
K5893269AA1			100–10	1
K5893271AA1			100–14	1
K5893272AA1			100–16	1
K5893273AA7			100–	1
K5895730AA15			100–4	4
K5895730AA19			100–3	4
K7000001P1			81–116	2
K7000002P2			46–67	3
K7000018P1			66–128	2
			71–178	
K7000020P1			48–12	3
K7000021P1			48–3	3
K7000037P1			48–8	3
K7000038P1			48–13	3
K7000058P1			44–29	3
K7000061P1			44–26	6
K7000062P1			44–14	3
K7000063P1			41–15	3
K7000064P1	3400	300078	41–22	6
K7000065P1			41–19	3
K7000070P2			66–374	5
			71–370	
K7000072P1			32–77	5
K7000073P1	3800	651103625	66–417	4
			71–424	
K7000075P1			47–40	6
K7000076P1			66–164	24
			71–63	
			71–164	
K7000079P1			91–2	4
K7000082P1			91–20	2
K7000082P2			91–19	2
K7000084P1			90–82	4
			90–218	
K7000085P2			84–42	5

PART NUMBER	STOCK NO.		FIG. & INDEX	TOTAL PER EQUIP
	CODE	SERIAL		
K7000089P1			90–221	1
K7000093P1			90–154	2
K7000102P1			66–174	8
			71–174	
K7000105P1			69–63	2
			73–63	
K7000115P1			69–71	4
			73–71	
K7000116P1			69–65	4
			73–65	
K7000125P1			66–275	4
			71–279	
K7000148P1			66–156	4
			71–156	
K7000150P1			66–309	12
			71–291	
K7000157G1			69–20	2
			73–20	
K7000158P1			69–21	2
			73–21	
K7000163P1			66–32	2
			71–72	
K7000164P1			66–307	3
K7000165P1			66–255	1
K7000179G1	3300	373045317	69–59	2
			73–59	
K7000189P1			66–399	8
			71–407	
K7000201P1			40–67	3
K7000202P1			40–83	3
K7000203P2			40–132	3
K7000210P1			28–14	20
K7000211P1			28–13	20
K7000213P1			28–10	20
K7000216P1			28–12	30
			28–20	
K7000217P1			28–11	20
K7000218P1			28–9	20
K7000220P1			28–15	20
K7000238P1			30–106	5
K7000239P1			30–61	5
K7000240P1			30–64	5
K7000241P1			30–66	5
K7000242P1			30–119	10
K7000243P1			30–120	10
K7000248P1			30–18	10
K7000250P1			30–16	10
K7000251P1			30–55	30
K7000252P1			30–40	10
K7000256P1			30–39	10
K7000258P1			30–111	5
K7000259P1			30–108	5
K7000260P1	3300	286223692	28–78	5
K7000263P1			30–15	10
K7000264P1			30–97	5
K7000265P1			30–122	10
K7000266P1			30–48	10
K7000267P1			30–123	10
K7000269P1			30–103	10
K7000270P2			28–215	5
K7000273P1			30–82	15
			30–141	
K7000274P1			30–30	5
K7000274P2			30–29	5
K7000275P1			30–4	10
K7000276P1			30–3	10
K7000282P1			30–102	10
K7000285P1			30–84	10
			30–98	
K7000286P1			30–81	20
			30–143	
K7000297P1			30–85	5
K7000301P1			30–144	5
K7000302P1			30–140	5
K7000305P1			28–86	5
K7000306P1			28–87	5
K7000307P1			29–46	10
K7000310P1	3300	292241435	29–43	10
K7000313P2			28–181	5
K7000315P2			28–192	5
K7000318P1			30–128	10

PART NUMBER	STOCK NO. CODE	STOCK NO. SERIAL	FIG. & INDEX	TOTAL PER EQUIP
K7000336P2			47–78	3
K7000348P1			30–132	5
K7000349P1			30–58	20
K7000350P1			33–23	5
K7000351P1			33–32	15
K7000352P1			33–13	5
K7000354P1			33–15	5
K7000356P1			33–16	10
			33–21	
K7000357P1			33–17	5
K7000358P1			33–24	20
K7000359P1			33–31	15
K7000381P1			28–82	5
K7000382P1			28–143	20
K7000382P2			28–142	25
K7000474P2	3400	300103	23–56	10
			23–62	
K7000511P1			2–109	5
			3–109	
			4–111	
			5–	
			6–	
K7000550P1			2–110	5
			3–110	
			4–112	
			5–	
			6–	
K7000552P1			2–75	10
			3–76	
			4–78	
			5–	
			6–	
K7000552P2			2–76	10
			3–77	
			4–79	
			5–	
			6–	
K7000558P2			38–266	5
K7000566P2			38–310	5
K7000568P2			38–239	5
K7000610P1			23–32	10
K7000611P1	3300	298896084	23–14	5
K7000612P1			23–28	15
			23–42	
K7000613P1			25–18	5
K7000614P1			25–3	5
K7000616P1	3300	286664102	25–19	5
K7000617P2			25–23	5
K7000618P1	3300	286664101	23–37	10
K7000632P1			2–112	5
			3–112	
			4–114	
			5–	
			6–	
K7000633P1	3300	299442750	2–111	5
			3–111	
			4–113	
			5–	
			6–	
K7000634P1			2–107	5
			3–107	
			4–109	
			5–	
			6–	
K7000662P1			23–53	10
K7000668P1			23–25	20
			23–47	
			25–21	
K7000670P2			2–254	5
			3–254	
			4–256	
			5–	
			6–	
K7000777P2			28–320	5
K7000987P2			46–77	3
K7001059P1			25–10	5
K7001062P1	3300	299442749	23–41	10
K7001064P1			35–173	20
			35–182	
K7001077P1			22–54	5
K7001077P2			22–53A	5

PART NUMBER	STOCK NO. CODE	STOCK NO. SERIAL	FIG. & INDEX	TOTAL PER EQUIP
K7001078P1			22–53	10
K7001082P1			55–5	5
K7001082P2			55–7	5
K7001104P1			17–81	2
K7001105P1			17–78	1
K7001110P1			17–94	1
K7001151P1			63–120	1
K7001165P1			51–12	15
			52–23	
K7001167P1			50–5	10
K7001200P1			119–12	2
K7001201P1			119–11	2
K7001202P2			119–1	18
K7001209P1			2–66	5
			3–67	
			4–69	
			5–	
			6–	
K7001232P1			118–25	1
K7001282P1			101–18	1
K7001365P1			118–52	1
K7001373P2			118–48	1
K7001374P1			119–8	2
K7001403P1	3300	314941547	26–42	265
			26–43	
			26–44	
			26–45	
			26–46	
			26–47	
			26–49	
			26–50	
			26–53	
			26–54	
			26–55	
			26–56	
			26–58	
			26–59	
			26–61	
			26–62	
			26–65	
			26–66	
			26–67	
			26–68	
			26–69	
			26–71	
			37–36	
			37–37	
			37–38	
			37–39	
			37–40	
			37–41	
			37–43	
			37–44	
			37–46	
			37–47	
			37–49	
			37–50	
			37–51	
			37–53	
			37–54	
			37–55	
			37–57	
			37–58	
			37–60	
			37–61	
			37–63	
			37–64	
			37–65	
			37–66	
			47–59	
			47–60	
			47–61	
			47–62	
K7001403P2	3300	314430060	37–52	5
K7001403P3	3300	314641000	21–54	17
			21–55	
			21–56	
			21–57	
			21–58	
			21–59	
			21–60	

PART NUMBER	STOCK NO. CODE	STOCK NO. SERIAL	FIG. & INDEX	TOTAL PER EQUIP
K7001403P3 (Cont)			21–61	
			21–69	
			21–70	
			21–71	
			21–72	
			21–73	
			21–74	
			21–75	
			21–76	
			21–77	
K7001403P4	3300	314160159	46–47	3
K7001403P5	3300	313889959	46–48	3
K7001403P7	3300	314766667	107–189	5
			107–190	
			107–191	
			107–192	
			107–193	
K7001505P1			23–57	5
K7001513P1			51–3	10
			52–3	
K7001515P1			50–2	10
K7001516P1			50–9	5
K7001516P2			50–8	5
K7001522P1			55–67	20
K7001524P1			17–199	4
K7001525P1			16–19	1
K7001526P1			16–15	1
K7001527P1			17–131	1
K7001529P1			17–153	4
K7001533P1			55–37	10
K7001535P1			55–35	10
K7001536P1			55–34	20
K7001537P1			55–36	10
K7001545P1	3300	387256816	2–315	15
			2–324	
			2–325	
			3–308	
			3–317	
			3–318	
			4–310	
			4–319	
			4–320	
			5–	
			6–	
K7001546P1			2–318	10
			3–311	
			4–313	
			5–	
			6–	
K7001555P1			69–16	2
			73–16	
K7001571			66–107	2
			71–101	
K7001719P1			23–13	5
K7001764P1	3300	395499438	28–151	5
K7002234P1			69–3	2
			73–3	
K7002235P1			69–29	4
			73–29	
K7002237P1			69–28	4
			73–28	
K7002238P1			69–14	4
			73–14	
K7002239P1			69–12	2
			73–12	
K7002252P2			69–7	2
			73–7	
K7002254P1			69–11	2
			73–11	
K7002255P1			69–9	2
			73–9	
K7002268P1			92–95	3
K7002269P1			40–166	3
K7002269P2			2–47	10
			3–48	
			4–50	
			5–	
			6–	
K7002271P1			55–124	5
K7002271P2			55–126	5

PART NUMBER	STOCK NO. CODE	STOCK NO. SERIAL	FIG. & INDEX	TOTAL PER EQUIP
K7002271P3			55–125	5
K7002272P1			55–184	10
K7002273P1			55–180	5
K7002782P1			55–89	20
K7002788P1			55–100	15
K7002789P1			55–157	5
K7002790P1			55–94	5
K7002852P1			55–176	15
K7002852P2			55–175	5
K7002852P3			55–55	5
K7002853P1			40–183	3
K7002858P1			2–284	15
			3–284	
			4–286	
			5–	
			6–	
			55–174	
K7002860P1			56–32	5
K7002869P1			2–296	120
			5–	
			29–38	
			35–16	
			38–110	
			39–8	
			62–49	
			63–51	
			64–114	
			65–54	
			77–5	
			79–5	
			105–5	
			106–5	
K7002870P1			2–295	80
			5–	
			29–37	
			35–15	
			38–109	
			39–7	
			40–150	
			40–151	
			62–48	
			63–50	
			64–113	
			65–53	
			75–3	
			77–4	
			79–4	
			105–4	
			106–4	
K7002917P1			58–80	8
			81–55	
K7002918P1			63–113	4
			64–176	
			75–71	
			77–39	
K7002919P1			63–112	4
			64–175	
			75–70	
			77–38	
K7002962P2			67–26	16
			67–31	
			72–26	
			72–31	
K7003033P1			2–182	5
			3–182	
			4–184	
			5–	
			6–	
K7003069P1			22–76	40
			29–24	
			39–54	
			40–217	
			105–70	
			106–123	
K7003070P1			4–214	36
			22–73	
			29–21	
			35–86	
			35–89	
			38–99	
			39–51	

PART NUMBER	STOCK NO. CODE	STOCK NO. SERIAL	FIG. & INDEX	TOTAL PER EQUIP
K7003070P1 (Cont)			105-67	
			106-120	
K7003079P1			55-96	75
			55-101	
			55-105	
K7003079P2			55-95	5
K7003097P1			2-81	5
			3-82	
			4-84	
			5-	
			6-	
K7003158P1			21-40	1
K7003323P1	3300	322866284	55-9	AR
			55-10	
			55-24	
			55-29	
			55-30	
			55-51	
			55-59	
			55-60	
			55-73	
			55-148	
K7003352P1			55-171	40
K7003371P1			58-43	2
			81-51	
K7003398P1			2-273	5
			3-273	
			4-275	
			5-	
			6-	
K7003398P2			2-274	5
			3-274	
			4-276	
			5-	
			6-	
K7003617P1			2-197	5
			3-197	
			4-199	
			5-	
			6-	
K7003698P2			40-211	3
K7003701P1			39-35	5
K7003702P1			39-36	5
K7003735P2			28-26	10
			28-28	
K7003737P1			28-21	5
K7003738P1			28-23	5
K7003738P2			28-25	5
K7003796P2			101-28	8
			101-38	
			101-150	
			101-156	
			101-163	
K7003936P1			28-19	5
K7003937P1			28-18	10
K7003938P1			28-17	5
K7003939P1			55-109	10
K7003954P1			109-5	1
K7004039			69-4	2
			73-4	
K7004047P19			90-2	1
K7004064P1			30-24	10
K7004108P1			118-106	1
K7004203P1			118-85	3
K7004207P1			30-67	5
K7004244P1			2-119	20
			3-119	
			4-121	
			5-	
			6-	
K7004259P1			23-55A	5
K7004265P1			2-94	5
			3-95	
			4-97	
			5-	
			6-	
K7004333			39-31	5
K7004390P1			2-288	10
			3-288	
			4-290	

PART NUMBER	STOCK NO. CODE	STOCK NO. SERIAL	FIG. & INDEX	TOTAL PER EQUIP
K7004390P1 (Cont)			5-	
			6-	
K7004391P1			2-137	5
			3-137	
			4-139	
			5-	
			6-	
K7004433P3			39-128	5
K7004550P1			66-209	2
			71-212	
K7004551P1			66-208	2
			71-211	
K7004554P1			19-8A	2
			19-12A	
K7004604P1			90-20	1
K7004605P1			90-17	1
K7004627P1			69-55A	2
			73-55A	
K7004667P1			39-79	5
K7004686P1			2-159	5
			3-159	
			4-161	
			5-	
			6-	
K7004687P1			2-158	5
			3-158	
			4-160	
			5-	
			6-	
K7004714P1			50-12	9
			103-10	
			104-10	
K7004714P2			51-11	15
			52-22	
K7005029P1			50-16	5
K7005030P2			50-19	5
K7005041P1			2-319	5
			3-312	
			4-314	
			5-	
			6-	
K7005062P1			38-44	5
K7005270P1			2-31	12
			2-36	
			3-32	
			3-37	
			4-34	
			4-39	
			5-	
			6-	
			103-3	
			104-3	
K7005340P1			19-7A	4
K7005399P1			35-85	5
K7005651P1			2-126	5
			3-126	
			4-128	
			5-	
			6-	
K7005651P2			2-123	5
			3-123	
			4-125	
			5-	
			6-	
K7005735P1			66-406	2
			71-413	
K7005735P2			66-405	2
			71-414	
K7005736P1			66-407	2
			71-412	
K7005787P1			2-132	10
			3-132	
			4-134	
			5-	
			6-	
K7005798P1			50-29	24
			103-21	
K7005799P1			50-32	24
			103-24	
K7005838P1			55-188	27

PART NUMBER	STOCK NO. CODE	STOCK NO. SERIAL	FIG. & INDEX	TOTAL PER EQUIP
K7005838P1 (Cont)			102–99	
K7005843P1			55–189	5
K7006249P1			17–174	1
K7006297P1			71–411	1
K7006297P2			66–408	1
K7006860P1			118–239	2
K7006867P1			75–73A	2
K7006893P1			118–4	8
K7007243P6			119–6	4
K7007243P9			119–5	2
K7007284P1			17–296	2
			17–304	
K7007419P1			2–330	10
			3–323	
			4–325	
			5–	
			6–	
K7007739P1			49–7	5
K7007950P1			120–4	1
K7007951P1			120–2	1
K7007968P1			120–39	1
K7008020P1			118–3	1
K7008025P1			119–13	2
K7008196P1			120–33	24
K7028262P1			66–272	2
			71–276	
K7028263P1			66–186	2
			71–185	
K7028263P2			66–185	2
			71–186	
K7028299P1	3300	651103630	66–75	4
			71–65	
K7101558P1			110–3	1
K7101575P1			110–1	1
K7101576P1			110–2	1
K7101577P1			110–5	1
K7102063P1	3300	286409630	17–95	66
			22–55	
			25–28	
			28–154	
			30–6	
K7102205P1	3300	310195009	21–107	1
K7103035P8			126–97	85
K7103858P1			28–24	10
			28–	
K7105373P1	3300	292241255	92–64	1
K7106459P1	3300	292291627	17–96	3
			106–28	
K7106954P2			38–334	10
K7106954P3			90–194	4
K7106955P3			88–59	1
K7106955P4			118–92	4
			118–242	
K7106956P4			87–18	11
			88–55	
K7106961P1	3300	333743002	18–21	5
K7107719P7			65–12	2
K7107772P1			18–18	30
			18–22	
			66–197	
			71–199	
			118–182	
			118–219	
			118–230	
K7108488P1	8850	483886	116–76	7
			116–77	
			116–78	
			116–79	
			118–162	
			118–163	
			118–164	
K7108913P1			101–208	1
K7109613P3	8850	749430	17–156	18
			27–29	
			35–155	
			39–34	
			108–46	
K7113396P1	8850	322083	17–75	6
			32–36	
K7114380P1			17–51	1

PART NUMBER	STOCK NO. CODE	STOCK NO. SERIAL	FIG. & INDEX	TOTAL PER EQUIP
K7115115P2			107–224	11
			107–285	
			107–288	
			107–294	
			107–303	
			107–308	
			126–49	
			126–60	
			126–62	
			126–137	
			126–138	
K7115115P3	3300	314628360	21–92	6
			21–94	
			21–96	
			21–98	
			21–100	
			21–102	
K7116047P1			101–125	1
K7117621P1			118–102	1
K7117622P1			118–103	1
K7117691P1			50–23	5
K7118447P1	8800	524867	58–39	4
			66-268	
			71–272	
			101–142	
K7118719P2			68–74	4
K7119183P3			18–16	2
K7119357P1			23–22	5
K7120345P1			110–6	1
K7120347P1			110–17	1
K7120348P1			110–11	1
K7120832P2			111–1	1
K7120871P1			110–16	1
K7121837P1			109–11	1
K7121957P1			101–17	3
			101–34	
			109–7	
K7124096P1			101–27	1
K7124442P1			37–48	5
K7124442P2	3300	314941547	26–41	80
			26–48	
			26–51	
			26–52	
			26–57	
			26–59	
			26–60	
			26–63	
			26–64	
			26–70	
			37–35	
			37–42	
			37–45	
			37–56	
			37–59	
			37–62	
K7124442P4	3300	314641000	21–62	35
			21–63	
			21–64	
			21–65	
			21–66	
			21–67	
			21–68	
K7124546P2			23–36	20
			25–1	
K7124782P2			101–86	1
K7125420P1			36–120	10
K7125446P1			17–218	1
K7125446P2			17–217	1
K7125809P2			63–137	1
K7126106P1			38–236	32
			38–247	
			38–263	
			106–146	
K7126106P13			105–196	2
K7126106P14			116–126	4
			116–142	
K7126106P2			17–319	2
K7126106P7			65–33	6
			76–91	
			76–113	

PART NUMBER	STOCK NO. CODE	STOCK NO. SERIAL	FIG. & INDEX	TOTAL PER EQUIP
K7126122P1			90-24	1
K7126122P5			17-87	2
K7126122P6			22-37	10
K7126123P1	3300	657686940	2-293	338
			17-1	
			29-1	
			35-1	
			38-1	
			39-1	
			40-1	
			56-13	
			56-16	
			56-19	
			58-5	
			62-1	
			63-1	
			64-111	
			65-1	
			75-1	
			76-1	
			77-1	
			79-1	
			105-1	
			106-92	
			116-1	
K7126123P2	3300	657686770	22-1	35
			103-1	
			104-1	
			106-1	
			108-1	
			118-43	
			127-1	
K7126123P4	3300	657686825	2-63	101
			2-113	
			3-64	
			3-113	
			4-66	
			4-115	
			5-	
			6-	
			68-1	
			92-4	
			102-14	
			102-31	
K7126137P1			92-13	2
K7126174P1			17-136	57
			22-24	
			28-68	
			28-90	
			35-72	
			38-90	
			39-40	
			40-190	
			63-140	
			69-43	
			73-43	
			92-6	
			102-120	
			105-116	
			106-111	
K7126174P2			92-7	1
K7126174P3			50-24	5
K7126393P1			126-13	1
K7126646P1			27-46	6
K7126649P1			38-	40
			52-14	
			64-146	
			64-170	
			105-27	
			105-32	
K7126649P10			77-20	4
			77-25	
			128-54	
			128-58	
K7126649P17			79-15	2
K7126649P2			38-	66
			52-15	
			105-29	
K7126649P3			38-	19
			52-12	

PART NUMBER	STOCK NO. CODE	STOCK NO. SERIAL	FIG. & INDEX	TOTAL PER EQUIP
K7126649P3 (Cont)			64-139	
			64-168	
K7126649P4			64-136	4
			64-166	
			77-19	
			77-23	
K7126649P5			38-165	15
			52-13	
			64-134	
			64-164	
			77-21	
			77-27	
			77-29	
			79-15	
			90-29	
			90-34	
K7126649P6			28-120	20
			38-	
			52-9	
K7126649P7			22-59	103
			39-27	
			39-29	
			52-10	
			58-22	
			62-41	
			62-44	
			79-20	
			90-232	
			90-237	
			105-34	
			128-52	
			128-57	
K7126649P8			38-	10
			52-11	
K7126649P9			58-19	6
			79-20	
			128-50	
			128-56	
K7126675P2			38-332	5
K7126677P2			38-250	5
K7126791P1			110-10	1
K7126808P1			120-5	5
K7128211P1			62-31	2
K7128212P1			2-155	6
			3-155	
			4-157	
			5-	
			6-	
			62-29	
K7128213P1			62-35	1
K7128214P1			62-21	1
K7128216P2			36-118	5
K7128222P2			77-147	1
K7128230P2			26-1	20
K7128230P3			21-1	4
K7128232P1			58-56	2
			81-42	
K7128233P1			58-62	2
			81-13	
K7128234			58-48	1
K7128234P1			81-38	1
K7128235P1			58-6	6
			92-5	
K7128235P2			2-64	369
			2-114	
			2-294	
			3-65	
			3-114	
			4-67	
			4-116	
			5-	
			6-	
			17-2	
			22-2	
			29-2	
			35-2	
			38-2	
			39-2	
			40-148	
			56-14	

PART NUMBER	STOCK NO. CODE	STOCK NO. SERIAL	FIG. & INDEX	TOTAL PER EQUIP
K7128235P2 (Cont)			56–17	
			56–20	
			62–2	
			63–2	
			64–112	
			65–2	
			68–2	
			75–2	
			77–2	
			79–2	
			101–135	
			101–139	
			102–15	
			102–32	
			105–2	
			106–2	
			106–11	
			108–2	
			127–22	
K7128235P3			103–2	5
			104–2	
K7128235P5			76–2	9
			116–2	
K7128243P1			58–77	5
			81–19	
K7128244P1			58–70	4
			81–27	
K7128245P1	3300	286075035	17–193	1
K7128267P1			77–98	1
K7128271P1			92–135	2
K7128272P1			92–136	2
K7128273P1			92–134	2
K7128274P1			19–8	1
K7128275P1			19–12	1
K7128276P1			19–11	1
K7128295P1			20–3	4
K7128296P1			17–195	4
K7128297P1			19–15	4
K7128298P1			19–16	1
K7128298P2			19–17	1
K7128387P1			48–2	3
K7128388P1			48–11	3
K7128740			71–301	6
K7128740P1	3300	331265841	66–54	40
			66–223	
			66–278	
			66–283	
			66–388	
			66–391	
			69–37	
			71–98	
			71–231	
			71–282	
			71–304	
			73–37	
K7128791P1			69–22	2
			73–22	
K7128791P2			69–23	2
			73–23	
K7128791P3			69–24	2
			73–24	
K7128791P4			69–25	2
			73–25	
K7128908P2			126–24	30
			126–26	
			126–28	
			126–30	
			126–34	
			126–35	
			126–39	
			126–42	
			126–44	
			126–46	
			126–50	
			126–58	
			126–59	
			126–63	
			126–64	
			126–70	
			126–72	
			126–73	

PART NUMBER	STOCK NO. CODE	STOCK NO. SERIAL	FIG. & INDEX	TOTAL PER EQUIP
K7128908P2 (Cont)			126–79	
			126–81	
			126–84	
			126–88	
			126–89	
			126–130	
			126–132	
			126–133	
			126–135	
K7129116P2			79–66	1
K7129120P1			17–140	1
K7129128P1			25–12	10
K7129129P1			25–11	5
K7129130P1			25–7	5
K7129131P1			25–9	5
K7129132P1			25–15	10
K7129147P1			65–18	2
			65–28	
K7129148P1			65–22	2
K7129200P1			20–9	4
K7129201P1			92–20	1
K7129204P1			18–17	3
K7129205P2			36–103	5
K7129206P1			18–6	2
K7129206P2			18–7	2
K7128215P1			17–208	1
K7129216P1			17–201	1
K7129217P1			17–61	1
K7129218P1			17–57	1
K7129219P2			65–36	1
K7129221P1			17–209	1
K7129222P1			17–202	1
K7129226P1			17–322	1
K7129230			66–22	1
K7129230P2			17–279	2
			17–283	
K7129230P6			71–47	1
K7129236P2			35–176	5
K7129238P2			35–196	5
K7129240P1			27–25	6
K7129247P2			27–62	6
K7129251P1			78–57	1
K7129260P1			39–75	5
K7129462P1			123–31	2
K7133513P10			101–218	1
K7133855P113			105–166	3
K7481951P2			17–347	1
K7861392P1			2–269	50
			2–392	
			3–269	
			3–385	
			4–271	
			4–388	
			5–	
			6–	
K7861714P15			2–64C	25
			3–65C	
			4–67C	
			5–	
			6–	
K7861714P4			116–154	2
K7861852P1			62–13	3
			66–144	
			71–144	
K7861852P2			38–338	35
K7866574P2			40–160	3
K7867274P21			2–163	10
			3–163	
			4–165	
			5–	
			6–	
K7868592P1			34–48	13
			47–84	
K7869103			21–78	10
			21–88	
K7869410P1			66–131	20
			66–188	
			66–194	
			71–188	
			71–194	
K7870294P2			29–45	10

PART NUMBER	STOCK NO.		FIG. & INDEX	TOTAL PER EQUIP
	CODE	SERIAL		
K7870535			17–157	116
			20–5	
			25–26	
			27–30	
			28–110	
			28–152	
			32–75	
			32–87	
			35–41	
			35–54	
			35–156	
			35–215	
			36–58	
			40–158	
			40–164	
			44–18	
			63–73	
K7870535P1			38–81	13
			38–145	
			45–8	
K7870535P2			105–43	15
			105–123	
			106–32	
			106–52	
			107–127	
			108–47	
			123–64	
K7871267P1			17–135	16
			22–23A	
			28–67	
			40–189	
			69–42	
			73–42	
K7871270P4	3300	292293292	101–121	1
K7872443			75–48	8
			75–98	
K7872443P1			66–92	34
			66–102	
			71–28	
			71–38	
			101–143	
K7872444P1			34–55B	20
K7872445			21–89	234
K7872445P1			28–164	93
K7872446			21–50	2
K7872504P1			92–110	1
K7873976			66–143	2
			71–143	
K7874555P10			65–12A	4
K7874555P17			39–100	64
K7874555P20			38–335	22
K7874555P24			122–20	4
K7874555P26			20–12	4
K7874555P33			122–19	4
K7874555P7			75–99	2
K7874681P1			32–42	2
			32–49	
K7874694			77–93	2
K7875350P1			118–246	2
			118–257	
K7875586P1			102–140	2
K7876451P1			17–121	34
			22–23	
			28–66	
			35–71	
			38–89	
			39–39	
			40–187	
			63–139	
			92–18	
			102–119	
			105–115	
			106–110	
K7876451P2			92–19	1
K7876451P3			28–65	5
K7876451P4			40–188	3
K7876700P1	3300	292248220	38–113	5
K7877148P1			125–15	1
K7877956P1			118–45	4
K7877957			118–51	2

PART NUMBER	STOCK NO.		FIG. & INDEX	TOTAL PER EQUIP
	CODE	SERIAL		
K7877959			118–50	1
K7878455P1			17–70	481
			26–34	
			28–159	
			28–165	
			32–14	
			32–94	
			34–16	
			34–67	
			34–72	
			34–81	
			36–121	
			37–69	
			44–31	
			44–42	
			45–11	
			46–52	
			47–21	
			47–90	
			92–100	
			116–104	
			126–109	
			126–114	
K7878455P2			118–214	5
			118–264	
			121–33	
K7878484P1			77–117	1
K7878739			77–112	1
K7878740			88–52	5
			92–29	
K7878743			92–109	1
K7881617P2			36–42	20
K7882388P3	3300	373045313	23–15	15
			23–64	
K7886371P2			17–88	26
			22–38	
			90–25	
K7886574P2			35–44	17
			35–212	
			39–17	
			105–39	
			106–48	
K7887395P6			34–85A	5
K7887395P7			35–8	5
K7887522P2	3300	299980003	28–239	5
K7887522P6	3300	299980012	28–240	6
			90–167	
K7891270P3			122–10	6
K7891988G1			17–165	1
K7893938P1			39–20	5
K7893938P2			2–198	30
			5–	
K7894288P1			110–19	1
K7894291P1			110–4	1
K7896564P3			17–227	4
			17–235	
K7896564P6			17–219	2
K7897091P1			17–226	2
			17–234	
K7897091P2			17–225	2
			17–233	
K7897758P1			110–14	1
K7897765P1			110–8	1
K7897766P1			110–12	1
K7897768P1			110–15	1
K7898633P1			21–45	6
K7898665P1			21–42	12
K7898666P1			21–39	6
K7898673P1			21–44	6
K7898757P1			21–41	6
K7899998P1			118–104	1
K7989133P1			66–151	2
			71–151	
K8104389AAG3			54–37	8
K8104389KB2			54–	8
K8104500AAP1			117–28	2
			117–32	
K8104500AAP2			54–22	16
			54–27	
K8109375AAP1			117–33	1

PART NUMBER	STOCK NO. CODE	STOCK NO. SERIAL	FIG. & INDEX	TOTAL PER EQUIP
K8124216ABP48			117–21	4
K8124385AAP1			53–21	5
K8127254AA			54–40	16
K8138268AGG7			117–	1
K8138269ABG11			117–	1
K8160261AAG4			117–35	1
K8315978P21			98–44	1
K8315983			98–35	2
K8315985P21			98–38	1
K8354937P21			98–28	1
K8354938P21			99–36	1
K8354938P22			99–30	2
K8354942P21			99–16	1
K8354942P22			99–34	1
K8355616P21			88–30	1
K8355626P21			88–26	1
K8355655P21			88–32	1
K8385400P21			98–34	1
K8385629P21			88–10	1
K835630P21			88–25	1
K8701406AA			61–26	3
K8701408AA			100–13	2
			100–18	
K8701408AAP1			53–29	5
K8701410AAP1			54–29	8
K8701935AA			54–41	8
K8705461AAG1			117–	1
K8705493AA			117–39	2
K8719253AAP1			54–34	8
K8710257AAP1			54–31	8
K8743916AAP1			54–33	8
K8743917AAP1			54–32	8
K9217664P21			88–4	1
K9236030P22			98–25	1
K9236047P26			99–14	1
K9236067P22			98–54	1
K9236067P23			98–55	1
K9236081P21			98–18	1
K9236081P22			98–13	1
K9236081P23			98–19	AR
K9254350G7			86–3	6
			86–10	
K9517467P21			97–11	1
K9529048P21			99–19	1
K9529613P21			99–4	1
K9529613P22			99–7	1
K9802745P21			89–6	2
K9802759P21			85–16	1
LA17281			129–43	AR
LSH			23–60	5
L113Y			102–136	2
			102–143	
MCB–1/16			38–	49
			52–	
			64–	
			105–	
			105–26	
MDM			39–	10
			39–26	
MFA505	3300	394118240	66–300	8
			66–301	
			66–302	
			66–303	
			87–2	
			87–3	
			87–4	
			87–5	
MJB1/200	8800	360870	2–401	5
			3–394	
			4–397	
			5–	
			6–	
ML2529813G1			97–	1
ML5239124G237			99–8	1
ML7000002G1			46–	3
ML7000033G1			48–1	3
ML7000045G1			48–10	3
ML7000047G1			48–9	3
ML7000059G1			44–	3
ML7000060G1			44–	3

PART NUMBER	STOCK NO. CODE	STOCK NO. SERIAL	FIG. & INDEX	TOTAL PER EQUIP
ML7000071G1			66–	5
			71–	
ML7000083G1	1800	215162007	46–	3
ML7000085G1			34–	5
ML7000091G1			90–	1
ML7000097G1			91–22	2
ML7000180G1			46–	1
ML7000203G1			40–	3
ML7000205G1			40–	3
ML7000207G1			34–	5
ML7000219G1			28–16	5
ML7000226G1			40–182	3
ML7000244G1			30–51	10
ML7000270G1			28–	5
ML7000271G1			28–	5
ML7000272G1			28–	5
ML7000300G1			30–130	5
ML7000311G1			29–16	10
ML7000313G1			28–	5
ML7000314G1			28–	5
ML7000336G1			47–	3
ML7000339G1	3300	308416771	47–72	3
ML7000360G1			33–8	10
ML7000380G1	3300	310195019	46–55	3
ML7000380G2	3300	310195010	47–89	3
ML7000380G7	3300	310195030	44–45	3
ML7000380G8			34–85	5
ML7000557G1			38–	5
ML7000558G1			38–	5
ML7000565G1			38–	5
ML7000567G1			38–	5
ML7000568G1			38–	5
ML7000635G1			2–	5
			3–	
			4–	
			5–	
			6–	
ML7000661G1			2–261	10
			3–261	
			4–263	
			5–	
			6–	
ML7000669G1			2–	5
			3–	
			4–	
			5–	
			6–	
ML7000670G1			2–	5
			3–	
			4–	
			5–	
			6–	
ML7000987G1			46–	3
ML7001063G1			26–	5
ML7001066G1			39–68	5
ML7001106P1			55–153	5
ML7001373G1			118–	4
ML7001500G1			2–173	5
			3–173	
			4–175	
			5–	
			6–	
ML7001501G1			2–141	25
			2–171	
			2–178	
			3–141	
			3–171	
			3–178	
			4–143	
			4–173	
			4–180	
			5–	
			6–	
ML7001547G1			2–	5
			3–	
			4–	
			5–	
			6–	
ML7001565G1			2–70	5
			3–71	
			4–73	

PART NUMBER	STOCK NO.		FIG. & INDEX	TOTAL PER EQUIP
	CODE	SERIAL		
ML7001565G1 (Cont)			5–	
			6–	
ML7001864P1			30–33	5
ML7001864P2			30–32	5
ML7002866G1			17–	2
ML7002866G2			17–	1
ML7002867G1			17–	1
ML7003043G1			2–	5
			3–	
			4–	
			5–	
			6–	
ML7003698G1			40–	3
ML7003704G1			40–	3
ML7004242G1			28–74	10
ML7004274G2			2–	5
			3–	
			4–	
			5–	
			6–	
ML7004274G5			101–193	1
ML7005030G1			50–	5
ML7005399G1			22–72	15
			29–20	
			38–98	
ML7005399G2			39–50	10
			40–213	
			105–66	
			106–119	
ML7006629G1			123–47	1
ML7006811G1			40–	3
ML7007777G1			28–	5
ML7007778G1			28–	5
ML7008156G1			2–	5
			3–	
			4–	
			5–	
			6–	
ML7008157G1			2–	5
			3–	
			4–	
			5–	
			6–	
ML7008158G1			2–	5
			3–	
			4–	
			5–	
			6–	
ML7009440G2			34–84A	20
ML7010360G1			126–	2
ML7010875G1			106–	1
ML7010876G1			106–	1
ML7012380G1			116–	1
ML7012381G1			116–	1
ML7012382G1			116–	1
ML7012383G1			116–	1
ML7012753G1			121–	1
ML7012754G1			121–	1
ML7012787G1			106–	1
ML7012788G1			106–	1
ML7014056G1			118–	1
ML7014130G1			101–	1
ML7014131G1			101–	1
ML7014132G1			101–	1
ML7014133G1			101–	1
ML7014134G1			101–	1
ML7014135G1			101–	1
ML7014136G1			101–	1
ML7014137G1			101–	1
ML7014138G1			101–	1
ML7014139G1			101–	1
ML7014140G1			101–	1
ML7014141G1			101–	1
ML7014142G2			101–	1
ML7014878G3			107–14	6
			107–15	
			107–16	
			107–17	
			107–18	
			107–19	
ML7101555G1			110–7	1

PART NUMBER	STOCK NO.		FIG. & INDEX	TOTAL PER EQUIP
	CODE	SERIAL		
ML7124633G1	3300	310195006	26–74	10
			26–76	
ML7124633G2	3300	310195007	26–75	35
			26–77	
			26–78	
			37–32	
			37–33	
			37–33A	
			37–34	
ML7125809G1			63–	1
ML7126181G2	3300	310195015	34–94	8
			46–130	
ML7126181G3	3300	310195005	47–114	7
			47–118	
			78–47	
ML7126608G1	3300	307668732	21–82	2
			21–84	
ML7126608G2	3300	307668731	21–81	2
			21–86	
ML7126608G3	3300	307668730	21–83	2
			21–85	
ML7126675G1			38–	5
ML7126677G1			38–	5
ML7128210G1			21–145	37
			21–146	
			26–124	
			26–125	
			26–126	
			26–127	
			37–141	
			37–142	
			37–143	
ML7128216G1			36–	5
ML7128222G1			77–	1
ML7128223G1			77–	1
ML7128250G1			76–	1
ML7128251G1			76–	1
ML7128287G1			19–4	2
			19–5	
ML7128299G1			19–	1
ML7128115G1			79–	1
ML7129116G1			79–	1
ML7129146G2			65–	1
ML7129205G1			36–	5
ML7129219G1			65–	1
ML7129220G2			65–	1
ML7129224G1			36–	5
ML7129226G1			17–	1
ML7129229G1	8800	098967–5	92–	1
ML7129235G1			35–	5
ML7129236G1			35–	5
ML7129238G1			35–	5
ML7129239G1			35–	5
ML7129251G1			78–	1
ML7129255G1			78–	1
ML7129257G1			27–	6
ML7132758G1			118–179	1
ML7132759G1			118–180	1
ML7300316G1			67–	1
ML7300316G2			72–	1
ML7300880G1			105–	1
ML7300884G1			106–	1
ML7300889G2			101–	1
ML7300892G1			118–	1
ML7300935G1			101–1	1
ML7300942G1			118–1	1
ML7301368G1			107–	1
ML7352545G1			77–	1
ML7352557G1			64–	1
ML7352666G1			63–	1
ML7352780G1			22–	5
ML7352786G1			66–	1
ML7352788G1			75–	1
ML7352789G1			71–	1
ML7352790G1			58–	1
ML7352791G1			81–	1
ML7352793G1			35–	5
ML7353027G2			59–	2
ML7353055G1			38–	5
ML7353056G1			90–	1

PART NUMBER	STOCK NO.		FIG. & INDEX	TOTAL PER EQUIP
	CODE	SERIAL		
ML7353057G1			39–	5
ML7353068G1			16–	1
ML7353090G1			23–	1
ML7353097G1			56–	5
ML7353098G1			56–	5
ML7353099G1			55–	5
ML7353300G1			2–	1
ML7353300G2			3–	1
ML7353300G3			4–	1
ML7353300G4			5–	1
ML7353300G5			6–	1
ML7353902G1			62–	1
ML7353922G1			79–	1
ML7353923G1			17–	1
ML7354001G1			66–28	1
ML7354001G2			73–	1
ML7354003G1			28–	5
ML7354006G1			40–	3
ML7354006P17			40–139	3
ML7354011G1			32–	5
ML7354016G1			91–	1
ML7354024G1	3300	328557921	30–	5
ML7354033G1			29–	5
ML7400787G1			32–	5
ML7400821G1			71–	1
ML7400830G1			73–	1
ML7400837G1	3300	286782655	48–	3
ML7400851G1			45–1	3
ML7400857G1			71–	1
ML7400858G1			71–	1
ML7400858G2			71–	1
ML7400858G3			71–	1
ML7400860G1			71–	1
ML7400861G1			71–	1
ML7400863G1			66–	1
ML7400864G1			66–	1
ML7400865G1			66–	1
ML7400866G1			66–	1
ML7400866G2			66–	1
ML7400866G3			66–	1
ML7400871G1			32–	5
ML7400873G1			71–309	2
ML7400874G1			47–	3
ML7400874P2			47–43	3
ML7400876G1			47–25	3
ML7400877G1			47–	3
ML7400879G1			32–	5
ML7400881G1	3300	308416762	44–24	9
			44–25	
			46–91	
ML7400881G10	3300	308416775	44–49	3
ML7400881G11	3300	310195017	44–53	6
			47–125	
ML7400881G13	3300	310195018	47–104	3
ML7400881G2	3300	308416773	46–92	3
ML7400881G3	3300	308416776	46–93	6
			46–96	
ML7400881G4	3300	308416777	46–97	3
ML7400881G5	3300	308416774	46–98	6
			46–99	
ML7400881G7	3300	308416760	46–95	6
			46–100	
ML7400881G8	3300	310195038	46–94	3
ML7400881G9	3300	310195016	47–30	15
			47–31	
			47–32	
			47–33	
			47–34	
ML7400886G1			90–	1
ML7400888G1			90–49	1
ML7400889G1			34–1	5
ML7400891G1			91–26	1
ML7400893G1			91–28	1
ML7400894G1			91–27	1
ML7400930G1			38–1	10
ML7400931G1			34–	5
ML7400933G1			40–	3
ML7400933G2			40–	3
ML7400933G3			40–	3
ML7400958G1			30–113	5

PART NUMBER	STOCK NO.		FIG. & INDEX	TOTAL PER EQUIP
	CODE	SERIAL		
ML7400959G1			30–115	10
			30–118	
ML7400960G2			30–	5
ML7400961P1			28–72	5
ML7400964G1			29–9	5
ML7400965G1			28–61	10
ML7400965G2			28–60	10
ML7400971G1	3300	308416759	45–32	3
ML7400978G1			28–307	5
ML7400979G1			32–	5
ML7400979G2			32–	5
ML7400981G1			28–	5
ML7400981G2			28–	5
ML7400982G1			28–	5
ML7400982G2			28–	5
ML7400986G1	3300	308416778	46–73	3
ML7403505G1			2–	5
			3–	
			4–	
			5–	
			6–	
ML7403505G2			2–	5
			3–	
			4–	
			5–	
			6–	
ML7403530G1			2–	2
			5–	
ML7403599G1			2–69	5
			3–70	
			4–72	
			5–	
			6–	
ML7403769G1			17–	1
ML7403769G2			17–	1
ML7403769G3			17–	1
ML7403769G4			17–	1
ML7403769G5			17–	1
ML7403769G6			17–	1
ML7403790G1			17–	1
ML7403790G2			17–	1
ML7403791G1			17–	1
ML7403861G1			2–180	5
			3–180	
			4–182	
			5–	
			6–	
ML7403883G1			28–29	5
ML7404372G1			2–	6
			3–	
			4–	
			5–	
			6–	
			101–	
ML7404372P2			4–56	1
ML7404390G1			2–86	5
			3–87	
			4–89	
			5–	
			6–	
ML7404965G1			2–	5
			3–	
			4–	
			5–	
			6–	
ML7405220G5			107–277	6
			107–287	
			107–293	
			107–298	
			107–306	
			107–310	
ML7406581G1			107–219	5
			107–247	
			107–311	
			123–104	
			123–111	
ML7407272G1			107–1	1
ML7407361G1	3300		46–61	3
ML7407474G1			106–	1
ML7407480G1			105–	1

PART NUMBER	STOCK NO.		FIG. & INDEX	TOTAL PER EQUIP
	CODE	SERIAL		
ML7407535G1			118–	1
ML7407535G2			118–	1
ML7407535G3			118–	1
ML7407554G1			118–	1
ML7407556G1	3340	296950888	34–52A	5
ML7407565G1			121–	1
ML7407580G1			30–	10
ML7407599G1			120–	1
ML7407643G1			123–2	1
ML7407667G1			123–48	1
ML7408525G1			39–	5
ML7408774G1			119–4	1
ML7408777G1			119–	1
ML7408783G1			118–	1
ML7408788G1			120–1	1
ML7460330G2			2–265	67
			2–266	
			2–267	
			2–268	
			2–386	
			2–387	
			2–388	
			2–389	
			2–390	
			2–391	
			3–265	
			3–266	
			3–267	
			3–268	
			3–379	
			3–380	
			3–381	
			3–382	
			3–383	
			3–384	
			4–267	
			4–268	
			4–269	
			4–270	
			4–382	
			4–383	
			4–384	
			4–385	
			4–386	
			4–387	
			5–	
			6–	
			17–126	
			58–65	
			58–66	
			66–325	
			66–326	
			66–327	
			66–328	
			71–323	
			71–324	
			71–325	
			71–326	
			81–22	
			81–23	
			84–10	
			84–11	
			90–32	
			101–246	
ML7460330G4	3300	395042510	27–5	8
			58–47	
			81–34	
			118–122	
ML7460330G5			16–11	65
			35–147	
			38–181	
			40–98	
			51–2	
			52–2	
			56–24	
			56–25	
			56–26	
			56–27	
			56–28	
			63–116	

PART NUMBER	STOCK NO.		FIG. & INDEX	TOTAL PER EQUIP
	CODE	SERIAL		
ML7460330G5 (Cont)			64–51	
			66–318	
			66–319	
			66–320	
			66–321	
			71–316	
			71–317	
			71–318	
			71–319	
			75–147	
			77–94	
			84–5	
			84–6	
			90–28	
			105–142	
ML7463687G1			17–76	1
ML7463830G1			28–141	15
ML7471136G1	3300	324786017	21–	1
ML7476392G1			22–51	5
ML7479372P1			110–	1
ML7481012G10	3300	310195014	26–88	5
ML7481012G3	3300	310004303	37–81	5
ML7481012G4	3300	310195002	26–87	25
			37–86	
			37–87	
			37–88	
			37–89	
ML7481012G5	3300	310195000	26–90	5
ML7481012G6	3300	310195003	37–84	10
			37–85	
ML7481012G7	3300	310195004	26–89	5
ML7481097G1	3300	307668735	66–147	4
			66–148	
			71–147	
			71–148	
ML7481405G1			64–	1
ML7481406G1			64–	1
ML7481407G1			64–	1
ML7481408G1			64–	1
ML7481824G1			17–	1
ML7481825G1			26–	5
ML7481834G1	3300	297070009	21–144	1
ML7481902G1			62–25	1
ML7481903G1			36–114	5
ML7481904G1	3300	293366243	36–	5
ML7481913G1			76–	1
ML7481920G1			76–	1
ML7481937G1			18–2	1
ML7481939G1			20–8	1
ML7481948G1			37–2	5
ML7481951G1			17–	1
ML7482819G1			68–	2
ML7482821G1			68–	2
ML7483021G1			38–	5
ML7483022G1			38–	5
ML7483056G1			2–228	5
			3–228	
			4–230	
			5–	
			6–	
ML7483079G1			55–161	5
ML7483090G1			55–167	5
ML7600463G1			2–99	5
			3–100	
			4–102	
			5–	
			6–	
ML7603285G1			123–1	1
ML7603317G1			107–	1
ML7603676G1			27–	6
ML7603811G1			125–	1
ML7603827G1			108–	1
ML7603849G1			116–	1
ML7603859G1			109–	1
ML7603863G1			116–	1
ML7603893G1			128–	1
ML7664398G1			92–	1
ML7664491G1			26–	5
ML7664492G1	1800	373749960	27–	6
			101–223	

PART NUMBER	STOCK NO. CODE	STOCK NO. SERIAL	FIG. & INDEX	TOTAL PER EQUIP
ML7664861G1			68–	3
ML7664877G1			76–	1
ML7665257G1			82–	1
ML7665282G1			25–	5
ML7665284G1			55–44	5
ML7665285G1			55–11	5
ML7665293G1			55–	5
ML7665294G1			22–4	5
ML7665366G1			2–101	5
			3–101	
			4–103	
			5–	
			6–	
ML7666422G1			68–3	2
ML7666442G1			47–	3
ML7666443G1			40–55	6
			41–	
ML7665445G1			47–4	3
ML7666446G1			32–3	10
ML7666705G1			36–	5
ML7666709G1			21–	1
ML7666727G1			60–	1
ML7666740G1			65–	1
ML7666742G1			36–1	5
ML7666890G1			40–134	3
ML7666803G1			90–64	1
ML7666806G1			90–58	1
ML7666807G1			90–43	1
ML7666808G1			91–8	1
ML7666810G1			91–29	1
ML7666810G2			91–30	1
ML7666812G1			34–	5
ML7666832G1			29–34	5
ML7666835G1			29–27	5
ML7666836G1			29–28	5
ML7666837G1			29–48	5
ML7666838G1			29–	5
ML7666839G1			29–29	5
ML7666842G1	3300	328557922	33–	5
ML7666846G1			28–132	5
ML7666848G1			28–56	5
ML7666848G2			28–55	5
ML7700300G1			41–1	3
ML7700302G1			47–1	3
ML7700311G1			40–	3
ML7700314G1			90–	1
ML7700315G1			34–3	5
ML7700324G1			28–	20
			28–34	
			28–38	
			28–42	
ML7700328G1			30–35	5
ML7700328G2			30–36	5
ML7700337G1			28–44	5
ML7700337G2			28–45	5
ML7700349G1			33–33	5
ML7700364G1			28–	5
ML7700878G1			28–	5
ML7700878G2			28–	5
ML7700935G1			49–5	5
ML7703119G2			111–	1
ML7704223G1			108–	1
ML7704270G1			122–1	1
ML7704271G1			122–	1
ML7704491G1			123–	1
ML7770731G3			58–	1
ML7770785G1			78–	1
ML7770257G1			2–225	15
			3–225	
			4–227	
			5–	
			6–	
ML7770257G2			38–121	7
			64–32	
			78–27	
ML7770257G3			27–47	42
			38–206	
			75–153	
ML7770798G1			16–3	2
ML7771494G1			69–1	2

PART NUMBER	STOCK NO. CODE	STOCK NO. SERIAL	FIG. & INDEX	TOTAL PER EQUIP
ML7771494G1 (Cont)			73–1	
ML7771810G1			21–3	1
ML7771835G1	3300	286782601	19–	1
ML7771838G1			17–	1
ML7771846G1			20–	1
ML7771847G1			18–	1
ML7771848G1			20–7	1
ML7771854G1			92–	1
ML7771855G1			57–	1
ML7771856G1			74–	1
ML7771862G1			37–	5
ML7771873G1			27–2	6
ML7771874G1			78–1	1
ML7772503G1			71–420	1
ML7772505G1			71–419	1
ML7772506G1			71–58	1
ML7772509G1			66–200	2
			71–202	
ML7772512G1			66–213	2
			71–216	
ML7772514G1			66–214	2
			71–217	
ML7772528G1			46–1	3
ML7772532G1			46–2	3
ML7772542G2			66–296	1
ML7772544G1			45–4	3
ML7772545G1			45–	3
ML7772546G1			44–1	3
ML7772547G1			44–	3
ML7772548G1			44–2	3
ML7772566G1			2–370	5
			3–363	
			4–365	
			5–	
			6–	
ML7772578G1			3–349	3
			4–351	
			6–	
ML7772588G1			52–1	5
ML7772590G1			50–	5
ML7772591G1			49–	5
ML7772592G1			52–	5
ML7772593G1			55–28	5
ML7772595G1			4–	1
ML7772598G1			51–	5
ML7876997G1			71–	3
ML7894267G2			110–18	1
ML7897781G2			110–	1
ML7988925G1	3300	287658879	40–58	3
ML8354935G1			99–	1
ML8385409G13			98–43	1
ML8385414G12			88–59	1
ML9219911G1			86–	6
ML9236047G1			99–	1
ML9236067G1			98–	1
ML9236067G2			98–	1
ML9502850G1			85–	1
ML9524504G1			84–	1
ML9529047G1			98–56	1
ML9529049G1			98–8	1
ML9532711G1			97–6	1
ML9532744G1			98–1	1
ML9635197G1			89–	1
ML9535607G1			88–	1
ML9535610G1			87–	1
ML9535613–401			85–2	1
ML9535613–402			85–1	1
ML9535613–403			85–3	1
ML9535613–404			85–4	1
ML9535613–405			85–5	1
MR26W002DCMA	3300	325262086	28–95	5
MR26W010DCVV	3300	328214222	28–93	5
MR26W050DCMA			75–19	6
			75–20	
			75–21	
			75–22	
			75–23	
			75–24	
MR26W100DCMA			108–19	1
MR26W100DCUA	3300	328625020	35–27	10

PART NUMBER	STOCK NO. CODE	STOCK NO. SERIAL	FIG. & INDEX	TOTAL PER EQUIP
MR26W100DCUA (Cont)			63–54	
			63–55	
			63–56	
			63–57	
			63–58	
MR26W150AFVV			108–21	1
MR26W500DCMA			108–17	1
MR36W001DCMA	3300	325260846	17–113	2
			106–24	
MR36W200DCVV	3300	328418128	64–159	1
MR36W500DCVV	3300	328458218	38–140	8
			64–157	
			77–13	
			105–45	
MSX12–141			2–301	40
			2–302	
			2–303	
			2–304	
			2–305	
			2–306	
			3–294	
			3–295	
			3–296	
			3–297	
			3–298	
			3–299	
			4–296	
			4–297	
			4–298	
			4–299	
			4–300	
			4–301	
			5–	
			6–	
			40–88	
			108–9	
			108–10	
			128–4	
			128–5	
			128–6	
			128–7	
			128–8	
MSX2–142			92–23	1
MSX4–141			58–34	7
			66–414	
			71–399	
			81–81	
			81–92	
			90–184	
			90–185	
MSX6–141			101–81	1
MSX8–141			2–300	18
			3–293	
			4–295	
			5–	
			6–	
			22–18	
			40–87	
			40–88	
			69–47	
			73–47	
MSX8–141Y			107–140	1
MSX8–142			79–70	5
			81–64	
			81–65	
			81–66	
			81–67	
MSX8–150			128–14	2
			128–15	
MTSH29			2–201	5
			3–201	
			4–203	
			5–	
			6–	
MT211–1			10–15	10
			12–15	
			15–18	
MT295–1			109–30	28
M112–7	6600	574864–8	28–57	20
M2R53P1			31–18	53

PART NUMBER	STOCK NO. CODE	STOCK NO. SERIAL	FIG. & INDEX	TOTAL PER EQUIP
M2R53P1 (Cont)			42–17	
			123–57	
M2R53P11			66–53	1
M2R53P12			17–74	16
			38–79	
			64–236	
			71–97	
			78–31	
M2R53P13			69–74	4
			73–74	
M2R53P14			35–200	19
			39–118	
			40–143	
			64–235	
			69–75	
			73–75	
M2R53P15			75–151	1
M2R53P16			66–62	3
			71–106	
			92–37	
M2R53P2			66–369	5
			66–371	
			71–363	
			71–365	
			71–367	
M2R53P21			28–168	23
			47–27A	
M2R53P22			59–16	5
			77–116	
			90–15	
			90–71	
M2R53P23			106–77	1
M2R53P25			2–334	17
			3–327	
			4–329	
			5–	
			6–	
			90–72	
M2R53P3			66–404	4
			71–409	
			105–174	
			123–92	
M2R53P4			2–259	30
			3–259	
			4–261	
			5–	
			6–	
			27–44	
			34–86	
			44–46	
			47–98	
M2R53P5			2–55	14
			2–292	
			3–56	
			3–292	
			4–58	
			4–294	
			5–	
			6–	
			46–79	
			77–91	
M50721			81–47	1
M5278700P4			99–24	1
M5842288AG1			100–1	1
M5842289DEP1			61–12	3
M5842289DGP1			61–13	3
M5842473ASP1			53–12	5
M5842483ADP2			53–13	5
M5845580AA1			100–2	1
M5845908KFP1			54–11	8
M7128251P2			76–48	1
M7400802P1			66–433	2
			71–451	
M7400808P1			66–177	2
			71–177	
M7400809P1			66–204	2
			71–206	
M7400815P1			66–166	3
			71–165	
M7400815P2			66–165	2

PART NUMBER	STOCK NO. CODE	STOCK NO. SERIAL	FIG. & INDEX	TOTAL PER EQUIP
M7400815P2 (Cont)			71–166	
M7400818P1			66–398	2
			71–406	
M7400832P1			66–57	2
			71–107	
M7400836P1			48–6	3
M7400852P2			32–1	5
M7400853P1			28–51	5
M7400853P2			28–52	5
M7400859P1	3300	291632232	41–6	6
M7400862P1	3300	291632230	41–13	3
M7400871P2			32–124	5
M7400878P2			32–135	5
M7400885P1			90–85	1
M7400887P1			90–227	1
M7400890P1			91–4	1
M7400892P1			90–36	1
M7400895P1			91–32	1
M7400896P1			91–33	2
M7400897P1			91–31	1
M7400901P1			91–12	1
M7400903P1			90–198	2
M7400904P1			91–16	1
M7400917P1			30–17	10
M7400918P1			30–93	5
M7400919P1			30–137	10
M7400920P1			30–112	5
M7400921P1			30–99	10
M7400923P1			30–43	5
M7400923P2			30–42	5
M7400924P1			30–88	5
M7400926P1			30–96	5
M7400927P1			30–77	20
M7400929P1			30–27	10
M7400931P2			34–61	5
M7400936P1			30–104	5
M7400964P4			29–9A	5
M7400983P1	7666	7666842–6	33–9	5
M7400985P1			33–22	5
M7403217	3300	395033097	23–30	10
			23–31	
M7403276P1	3300	395246206	18–25	1
M7403297P1	3300	291628292	23–63	5
M7403505G2			2–	2
			5–	
M7403506P1			51–18	5
M7403506P2			49–4	5
M7403506P3			52–29	5
M7403506P4			50–22	5
M7403515P1			2–64A	5
			3–65A	
			4–67A	
			5–	
			6–	
M7403517P1			55–131	10
M7403517P2			55–137	10
			55–143	
M7403517P3			55–135	15
M7403518P1			55–130	10
M7403518P2			55–136	10
			55–142	
M7403518P3			55–134	15
M7403522P1			55–191	5
M7403529P1			2–102	6
			3–102	
			4–104	
			5–	
			6–	
			101–239	
M7403529P2			3–364	3
			4–366	
			6–	
M7403529P3			90–57	1
M7403529P4			101–66	1
M7403531P1			2–299	2
			5–	
M7403661P18			17–215	21
			26–1A	
M7403661P23			17–239	2
M7403661P26			17–223	2

PART NUMBER	STOCK NO. CODE	STOCK NO. SERIAL	FIG. & INDEX	TOTAL PER EQUIP
M7403797P1			32–5	5
M7403903P1			69–17	2
			73–17	
M7403921P1			55–133	5
M7403921P2			55–141	5
M7403921P3			55–139	5
M7403922P1			55–132	5
M7403922P2			55–140	5
M7403922P3			55–138	5
M7403966P1	3300	295559888	2–260	5
			3–260	
			4–262	
			5–	
			6–	
M7403990P1			55–19	5
M7403990P2			22–28	5
M7404372P2			2–53	6
			3–54	
			4–56	
			5–	
			6–	
			101–32	
M7404441P1			71–236	1
M7404452P1			30–19	5
M7404456P1			55–120	15
M7404456P2			55–119	15
M7404464P1	8025	7404464P1	28–73	5
M7404497P1			2–118	10
			3–118	
			4–120	
			5–	
			6–	
M7404966P1			2–165	5
			3–165	
			4–167	
			5–	
			6–	
M7404966P2			2–164	5
			3–164	
			4–166	
			5–	
			6–	
M7405218P1			35–228	5
M7405262P1			64–55	1
M7405263P1			64–237	1
M7405273P1			71–292	1
M7405273P2			66–308	2
M7405290P1			50–28	6
			103–20	
M7405307P1			91–34	1
M7405308P1			91–35	1
M7405309P1			91–37	2
M7405310P1			91–36	1
M7406473P2			126–100	3
			126–101	
			126–102	
M7406474P2			126–99	3
			126–103	
			126–104	
M7461888P16			69–33	2
			73–33	
M7461888P19			69–64	2
			73–64	
M7461888P35			111–2	1
M7461888P4			30–62	5
M7461888P41			102–137	2
			102–144	
M7461888P53			101–126	1
M7461888P6			69–13	4
			69–19	
			73–13	
			73–19	
M7462416P1			28–163	35
M7462416P2	3300	331265838	21–87	30
			44–34	
			45–14	
			46–51	
M7462416P3			32–97	30
M7462416P9	3300	331265837	26–37	141
			34–74	

PART NUMBER	STOCK NO. CODE	STOCK NO. SERIAL	FIG. & INDEX	TOTAL PER EQUIP
M7462416P9 (Cont)			36–122	
			37–73	
			47–94	
			92–97	
M7462893P1			107–28	14
M7467488P2	3300	292221870	22–49	5
M7467488P3			28–137	5
M7467948P1	3300	440268000	39–98	6
			66–250	
M7468534P2			17–270	42
			34–24	
			34–24A	
			82–18	
			92–1	
M7468567P1			17–241	8
			17–242	
			17–247	
			17–248	
			17–253	
			17–254	
			17–259	
			17–260	
M7469288P27			23–61	5
M7469288P82			127–27	1
M7471802P15			39–140	15
			39–141	
			39–142	
M7472146P29			23–12	5
M7472146P42			118–105	1
M7472342P21	3300	396501916	88–2	1
M7472342P40	3300	392197391	88–3	1
M7472349P5	3300	295578675	21–4	8
M7472368P1			21–38	1
M7472368P14			21–37	1
M7472368P22			59–24	2
M7472368P23			17–231	2
M7474049P6	3300	395033096	30–46	6
			30–47	
M7474401P48	3300	393964000	32–110	20
			32–111	
			34–103	
			34–104	
M7474401P50	3300	393564503	32–141	10
			32–142	
M7474939P23			28–304	5
M7474939P24	3300	308034242	28–301	18
			28–302	
			28–303	
			40–111	
M7475006P6			18–12	8
			18–15	
M7475057P1	3300	307668698	21–108	47
			21–109	
			21–110	
			21–111	
			21–112	
			21–113	
			21–114	
			37–77	
			37–78	
			37–79	
			37–80	
			37–83	
			37–144	
			37–145	
			37–146	
M7475333P3			40–212	22
			116–130	
			116–146	
M7476323P5	3300	651546111	21–47	8
M7476539G1			88–44	2
M7476539G2			88–45	2
M7476737P1			17–7	1
M7476737P4			28–233	5
M7478617P1			22–47	75
			28–99	
			28–135	
			35–56	
M7479353P1			111–3	1
M7480481P1	3300	308034230	17–301	6

PART NUMBER	STOCK NO. CODE	STOCK NO. SERIAL	FIG. & INDEX	TOTAL PER EQUIP
M7480481P1 (Cont)			35–221	
M7480544P10M			28–258	20
M7480544P11D			38–291	60
			38–307	
			38–325	
M7480544P11F			28–317	8
			68–61	
M7480544P16F			77–144	4
M7480544P17B			2–256	20
			3–256	
			4–258	
			5–	
			6–	
M7480544P17C			17–324	25
			36–86	
			78–59	
M7480544P17D			28–253	5
M7480544P17F			79–63	2
M7480544P20E			51–10	28
			52–21	
			103–7	
			104–7	
M7480544P20F			2–134	30
			3–134	
			4–136	
			5–	
			6–	
M7480544P21K			66–292	4
			71–313	
M7480544P4D			17–284	11
			34–52B	
M7480544P5C			28–178	20
			28–212	
M7480544P5D			34–58	24
			46–64	
M7480544P5E			47–75	9
M7480544P5F			46–74	6
M7480544P5P			34–39	10
M7480544P7A			66–373	20
			71–369	
M7480544P7D			66–377	20
			71–373	
M7480544P8B			2–331	20
			3–324	
			4–326	
			5–	
			6–	
M7480544P8C			32–121	55
			32–132	
			34–71	
			40–129	
M7480544P8K			28–162	10
M7480544P8P			40–200	6
M7480544P9F			66–331	16
			71–329	
M7480938P14	3300	394146472	66–126	8
			66–127	
			66–128	
			66–129	
			71–126	
			71–127	
			71–128	
			71–129	
M7480938P22			118–175	1
M7481405P2			64–204	1
M7481407P2			64–109	1
M7481409P1			64–206	1
M7481409P2			64–210	1
M7481436P1			58–12	1
M7481438P2			58–7	1
M7481469P1	3300	651921390	17–67	103
			17–71	
			17–99	
			34–44	
			35–46	
			35–151	
			36–53	
			38–66	
			39–12	
			40–154	

PART NUMBER	STOCK NO. CODE	STOCK NO. SERIAL	FIG. & INDEX	TOTAL PER EQUIP
M7481469P1 (Cont)			44–15	
			45–5	
			47–81	
			68–54	
			105–119	
			107–116	
			123–60	
M7481487P1			62–8	2
			62–17	
M7481915P1	3300	291330800	17–212	1
M7481917P1	3300	291340575	23–7	5
M7481918P1	3300	697304101	23–16	5
M7481919P1	3300	395430509	25–25	5
M7481920P2			76–116	1
M7481955P1			79–74	1
M7481956P1			79–126	1
M7481957P1			79–127	2
M7481967P1			16–7	1
M7481972P1			16–23	2
M7481972P2			16–24	4
M7481973P1			16–27	2
M7481974P1			27–12	5
M7481990P1			39–71	5
M7482618P2			118–176	1
M7482642P1	3300	697304100	2–56	5
			3–57	
			4–59	
			5–	
			6–	
M7482686P1	3300	373738947	23–19	5
M7482819P2			68–78	2
M7482850P1			69–66	2
			73–66	
M7482851P1			69–2	2
			73–2	
M7482858P1			81–74	2
M7482858P3			58–27	1
M7482865P1			66–258	3
			71–241	
			71–262	
M7482875P1			66–228	1
M7482886P1			66–385	4
			71–298	
M7482890P1			66–74	2
			71–64	
M7482914P86	3300	391710007	28–185	5
M7483000P1			79–109	1
M7483000P2			79–110	2
M7483022P2			38–294	5
M7483048P1	3300	291632245	23–54	10
			25–20	
M7483054P1			2–116	5
			3–116	
			4–118	
			5–	
			6–	
M7483055P1			2–115	5
			3–115	
			4–117	
			5–	
			6–	
M7483068P1			55–6	5
M7483068P2			55–8	5
M7483095P1	6700	183615–25	50–10	5
M7483176P2	3300	315168749	34–79	78
			34–80	
			34–82	
			44–40	
			44–41	
			46–33	
			46–34	
			46–35	
			46–36	
			46–37	
			46–38	
			46–39	
			46–40	
			46–41	
			46–42	
			46–43	

PART NUMBER	STOCK NO. CODE	STOCK NO. SERIAL	FIG. & INDEX	TOTAL PER EQUIP
M7483176P2 (Cont)			46–44	
			47–50	
			47–51	
			47–52	
			47–53	
			47–54	
			47–55	
			47–56	
M7483176P3	3300	314738117	34–78	8
			44–39	
M7483176P4			107–168	13
			107–169	
			107–170	
			107–171	
			107–172	
			107–173	
			107–174	
			107–178	
			107–180	
			107–182	
			107–184	
			107–185	
			107–186	
M7483176P5			107–175	5
			107–177	
			107–179	
			107–181	
			107–183	
M7483200			121–37	1
M7483317P2			118–21	1
M7483488P1	6700	183615–75	51–7	27
			52–18	
			59–11	
			67–11	
			67–21	
			72–11	
			72–21	
			84–3	
M7483488P2			103–6	4
			104–6	
M7871270P4			63–66	5
M8144042AA			54–44	8
M8144043AA			54–43	16
M8144049AA			54–42	8
M8144066AAP1			117–40	1
M8144067AAP1			117–43	1
M8144068AAP2			117–42	2
M8144069AAP2			117–41	2
M9219911P22			86–55	1
M9219911P23			86–56	1
M9219911P24			86–30	1
M9219911P25			86–29	3
M9219911P30			86–41	1
M9544562P26			89–2	2
M9544562P27			89–3	1
M9544564P21			89–12	1
NAS–17–2–A			112–22	1
NC1–12	3300	349142844	23–2	5
NC1–12R	3300	348142834	69–32	2
			73–32	
NC1–13			96–21	1
NP			31–16	14
			42–15	
			83–9	
NP116062			83–8	1
NP118396N			17–118	1
NP120991			98–11	1
NP123191			97–7	1
NP125113F1			62–45	4
			79–46	
			105–54	
NP125298C			64–158	2
			77–12	
NP125298E			108–26	1
NP125499A			79–16	3
			79–21	
			90–236	
NP125499B			79–18	1
NP125511A			63–96	1
NP125511B			63–97	1

PART NUMBER	STOCK NO.		FIG. & INDEX	TOTAL PER EQUIP
	CODE	SERIAL		
NP125512A			63–98	1
NP125512B			63–99	1
NP125513			63–100	1
NP125514			63–105	1
NP125518A			62–67	1
NP125518B			62–66	1
NP125518C			62–63	1
NP125539A			75–25	1
NP125539B			75–27	1
NP125539C			75–29	1
NP125539D			75–28	1
NP125539E			75–26	1
NP125539F			75–30	1
NP125553A			62–64	1
NP125553B			62–65	1
NP125555A			64–156	1
NP125555B			64–155	1
NP125580			77–31	1
NP125581			77–35	1
NP125719Z			66–9	1
NP125726G			17–192	1
NP125726H			17–171	1
NP125726J			17–178	1
NP125726K			17–186	1
NP125767L			66–125	2
			71–125	
NP125767M			66–7	1
NP125767N			66–8	2
			71–9	
NP125767P			66–13	2
			71–14	
NP125767R			66–17	2
			71–19	
NP125767S			66–79	1
NP125767T			71–441	1
NP125767U			71–8	1
NP125775A			71–49	2
NP125775B			71–124	1
NP125775C			71–7	1
NP125775D			71–13	1
NP125775E			71–18	1
NP125775J			71–440	1
NP125783			79–13	1
NP125783A			90–231	1
NP125845E			79–47	1
NP125845F			79–48	1
NP125845G			79–49	1
NP125845H			79–50	1
NP125845J			79–51	1
NP125845K			79–52	1
NP125845L			79–53	1
NP125845M			79–55	1
NP125845N			79–56	1
NP125845P			79–45	1
NP125845R			22–65	5
NP125845S			79–54	1
NP125859			92–70	1
NP125915H			75–62	1
NP125920A			75–60	1
NP125920B			75–64	1
NP125920D			75–59	1
NP125948A			60–14	1
NP125948B			60–15	1
NP125948C			60–16	1
NP125948D			60–17	1
NP125948E			60–18	1
NP125948F			60–19	1
NP125948G			60–20	1
NP125948H			60–22	1
NP125948J			60–21	1
NP125948K			60–23	1
NP125948M			60–24	1
NP125969			39–30	5
NP125970A			39–16	5
NP125971			39–22	5
NP125975			35–43	5
NP125976A			75–39	7
			105–37	
			128–65	
NP125976B			35–36	6

PART NUMBER	STOCK NO.		FIG. & INDEX	TOTAL PER EQUIP
	CODE	SERIAL		
NP125976B (Cont)			106–46	
NP125976C			75–42	1
NP125976D			35–38	6
			106–44	
NP125976E			35–39	6
			106–43	
NP1225977			35–37	5
NP125979			64–172	1
NP125984E			75–55	2
			108–51	
NP125984F			75–56	2
			108–52	
NP125984G			75–57	1
NP125984H			75–58	1
NP125984J			75–53	1
NP125984K			75–54	2
			108–62	
NP125984L			75–51	2
			108–57	
NP125984M			75–52	2
			108–58	
NP125992A			79–43	1
NP125992B			79–44	1
NP125992C			35–58	6
			106–61	
NP125992D			35–60	5
NP125992E			35–61	5
NP125992F			35–62	6
			106–60	
NP125992G			35–59	9
			40–174	
			106–57	
NP125992H			35–63	5
NP125992J			35–64	5
NP125992K			35–65	6
			106–59	
NP125992L			35–66	5
NP125992M			35–67	5
NP125992R			65–60	1
NP125992S			65–61	1
NP129954			98–10	1
NP129955			98–9	1
NP136021			119–14	1
NP136029			71–259	1
NP136030			66–246	1
NP136036			17–105	1
NP136060A			92–126	1
NP136060B			92–128	1
NP136060C			92–127	1
NP136060D			92–124	1
NP136060E			92–125	1
NP136060F			92–129	1
NP136060G			92–130	1
NP136061			22–44	5
NP136062			38–116	5
NP136064			38–117	5
NP136065			38–118	5
NP136069			22–63	5
NP136070			38–119	5
NP136185A			35–28	5
NP136185B			28–94	5
NP136185C			28–96	5
NP136186E1			40–50	3
NP136186K			32–39	5
NP136186L			28–6	5
NP136186M			28–37	5
NP136186N			28–41	5
NP136186P			28–31	5
NP136186R			32–46	5
NP136187D1			28–8	5
NP136187E1			28–33	5
NP136188A			28–108	5
NP136188B			28–109	5
NP136189			28–107	5
NP136190			30–8	5
NP136191			28–128	5
NP136200			81–95	1
NP136327A			63–106	1
NP136329A			62–75	1
NP136331A			65–62	1

PART NUMBER	STOCK NO.		FIG. & INDEX	TOTAL PER EQUIP
	CODE	SERIAL		
NP136331B			68–86	2
NP136331C			71–394	1
NP136332B			75–63	1
NP136332C			76–26	1
NP136333A			78–41	1
NP136333B			77–36	1
NP136333C			79–57	1
NP136336C			92–11	1
NP136341B			57–6	1
NP136342			17–112	1
NP137405D			17–255	1
NP137405E			17–249	1
NP137409A			17–256	1
NP137409B			17–262	1
NP137409D			17–250	1
NP137409E			74–26	1
NP137409F			74–28	1
NP137409G			74–30	1
NP137409H			74–32	1
NP137409J			74–34	1
NP137409K			74–20	1
NP137409L			74–22	1
NP137409M			74–24	1
NP137410A1			2–485B	5
			3–477B	
			4–480B	
			5–	
			6–	
NP137410B1			2–485A	5
			3–477A	
			4–480A	
			5–	
			6–	
NP137410C1			2–487	5
			3–479	
			4–482	
			5–	
			6–	
NP137410D1			2–489	5
			3–481	
			4–484	
			5–	
			6–	
NP137410E1			17–244	1
NP137410G			2–243	5
			3–245	
			4–245	
			5–	
			6–	
NP137410H			2–244	5
			3–244	
			4–246	
			5–	
			6–	
NP137410J			2–245	5
			3–245	
			4–247	
			5–	
			6–	
NP137410K			2–427A	5
			3–419A	
			4–422A	
			5–	
			6–	
NP137410L			2–414A	5
			3–406A	
			4–409A	
			5–	
			6–	
NP137410M			17–261	1
NP137410N			17–243	1
NP137410P			2–427B	5
			3–419B	
			4–422B	
			5–	
			6–	
NP137410R			2–414B	5
			3–406B	
			4–409B	
			5–	

PART NUMBER	STOCK NO.		FIG. & INDEX	TOTAL PER EQUIP
	CODE	SERIAL		
NP137410R (Cont)			6–	-
NP137410S			2–498	5
			3–490	
			4–493	
			5–	
			6–	
NP137410V			2–500	5
			3–492	
			4–495	
			5–	
			6–	
NP137410W			2–502	5
			3–494	
			4–497	
			5–	
			6–	
NP137410Z			2–496	5
			3–488	
			4–491	
			5–	
			6–	
NP137417B			2–438	5
			3–430	
			4–433	
			5–	
			6–	
NP137417C			2–441	5
			3–433	
			4–436	
			5–	
			6–	
NP137417D			2–481	5
			3–473	
			4–476	
			5–	
			6–	
NP137417G			17–170	1
NP137417H			17–190	1
NP137425A			32–40	5
NP137425A1			40–51	3
NP137425B1			40–80	3
NP137425C			32–47	5
NP137425D			28–7	5
NP137425E			28–36	5
NP137425F			28–32	5
NP137425G			28–40	5
NP137426A			2–400	5
			3–393	
			4–396	
			5–	
			6–	
NP137426B			2–513	5
			3–505	
			4–508	
			5–	
			6–	
NP137426D			2–456	6
			3–448	
			4–451	
			5–	
			6–	
			101–275	
NP137426E			2–450	6
			3–442	
			4–445	
			5–	
			6–	
			101–280	
NP137426F			2–453	5
			3–445	
			4–448	
			5–	
			6–	
NP137426G			2–423	5
			3–415	
			4–418	
			5–	
			6–	
NP137426H			2–471	5
			3–463	

PART NUMBER	STOCK NO. CODE	STOCK NO. SERIAL	FIG. & INDEX	TOTAL PER EQUIP
NP137426H (Cont)			4–466	
			5–	
			6–	
NP137426J			17–229	1
NP137426K			17–221	1
NP137426P			2–516	5
			3–508	
			4–511	
			5–	
			6–	
NP137426R			2–518	5
			3–510	
			4–513	
			5–	
			6–	
NP137426S			2–520	5
			3–512	
			4–515	
			5–	
			6–	
NP137426T			2–522	5
			3–514	
			4–517	
			5–	
			6–	
NP137426U			2–524	5
			3–516	
			4–519	
			5–	
			6–	
NP137426V			2–417	5
			3–409	
			4–412	
			5–	
			6–	
NP137426X			2–506	5
			3–498	
			4–501	
			5–	
			6–	
NP137426Y			2–508	5
			3–500	
			4–503	
			5–	
			6–	
NP137426Z			2–504	5
			3–496	
			4–499	
			5–	
			6–	
NP137427A			2–458	5
			3–450	
			4–453	
			5–	
			6–	
NP137427B			2–460	5
			3–452	
			4–455	
			5–	
			6–	
NP137427C			2–479	5
			3–471	
			4–474	
			5–	
			6–	
NP137427D			2–492	5
			3–484	
			4–487	
			5–	
			6–	
NP137427E			2–494	5
			3–486	
			4–489	
			5–	
			6–	
NP137427F			17–228	1
NP137427G			17–220	1
NP137427H			17–236	1
NP137427I			57–19	1
NP137427L			57–10	1
NP137427M			57–13	1

PART NUMBER	STOCK NO. CODE	STOCK NO. SERIAL	FIG. & INDEX	TOTAL PER EQUIP
NP137427N			57–22	1
NP137427P			57–28	1
NP137427R			57–16	1
NP137427S			57–25	1
NP137427U			57–36	1
NP137427V			57–39	1
NP137427W			57–30	1
NP137427X			57–33	1
NP137428A			75–76	1
NP137428A1			74–17	1
NP137428B			75–79	1
NP137428C			77–151	1
NP137428D			74–13	1
NP137428Z			74–15	1
NP137430C			17–191	1
NP137430D			17–237	1
NP137430E			17–169	1
NP137449			64–148	1
NP137451C			128–70	1
NP137452A			105–46	1
NP137452B			64–160	1
NP137454			40–163	3
NP137458A			82–44	1
NP137458B			82–45	1
NP137458C			82–46	1
NP137458F			82–52	1
NP137458G			82–48	1
NP137458H			82–49	1
NP137458J			82–50	1
NP137458K			82–51	1
NP137458L			82–47	1
NP137458M			82–53	1
NP137458R			92–131	1
NP137458S			92–132	1
NP137461A			52–16	6
			64–46	
NP137461E			82–30	1
NP137461F			82–31	1
NP137461G			82–32	1
NP137461H			82–33	1
NP137461J			82–34	1
NP137461K			82–35	1
NP137461L			82–36	1
NP137461M			82–37	1
NP137461N			82–38	1
NP137461P			82–39	1
NP137461R			82–40	1
NP137461S			82–41	1
NP137461T			82–42	1
NP137461U			82–43	1
NP137462R			17–117	1
NP137462S			66–365	1
NP137462U			90–47	1
NP137463C			40–172	3
NP137463D			40–170	3
NP137463E			40–171	3
NP137555A			39–37	5
NP137555B			38–87	5
NP137555C			22–79	5
NP137556A			17–119	1
NP137556B			40–173	3
NP137566H			128–67	1
NP137567R			30–9	10
NP137567S			30–10	10
NP140019A			27–64	6
NP140019B			35–198	5
NP140019C			36–67	5
NP140019D			35–69	5
NP140020A			29–49	5
NP140020C			2–20	5
			3–21	
			4–23	
			5–	
			6–	
NP140022B			26–11A	5
NP140024H			60–25	1
NP140029J			66–431	1
NP140029M			66–364	1
NP140029N			66–367	1
NP140029P			66–429	1
NP140029R			66–428	1

PART NUMBER	STOCK NO.		FIG. & INDEX	TOTAL PER EQUIP
	CODE	SERIAL		
NP140029S			66–366	1
NP140029T			66–430	1
NP140029U			71–449	1
NP140030A			71–448	1
NP140030B			71–390	1
NP140030C			71–389	1
NP140030D			71–388	1
NP140030E			71–447	1
NP140030F			71–445	1
NP140030G			71–391	1
NP140030H			71–392	1
NP140030J			71–393	1
NP140030K			71–446	1
NP140046A			34–85C	5
NP140046H			47–49B	3
NP140046I			44–46D	3
NP140046J			47–49D	3
NP140076			75–61	1
NP140084E			17–245	1
NP140084F			17–263	1
NP140084G			17–257	1
NP140084H			17–251	1
NP140089A			2–510	5
			3–502	
			4–505	
			5–	
			6–	
NP140089E			92–36	1
NP140089F			32–68	5
NP140089G			32–69	5
NP140089H			32–70	5
NP140157A			90–5	1
NP140159			74–6	1
NP140161			64–173	1
NP140241A			26–24A	5
NP140304A			2–403	5
			3–396	
			4–399	
			5–	
			6–	
NP140304B			2–408	5
			3–400	
			4–403	
			5–	
			6–	
NP140304C			2–406	2
			5–	
NP14035A			17–230	1
NP140305B			17–222	1
NP140305C			17–238	1
NP140305E			40–74	3
NP140305F			40–52	3
NP140305H			40–64	3
NP140325			3–20	1
NP140326			4–22	1
NP140327			2–19	1
NP140328			6–	1
NP140329			5–	1
NP144269E			108–55	2
NP144274A			108–20	1
NP144324P			2–427	5
			3–419	
			4–422	
			5–	
			6–	
NP144324R			2–414	5
			3–406	
			4–409	
			5–	
			6–	
NP144324S			2–485	5
			3–477	
			4–480	
			5–	
			6–	
NP151473H			105–50	2
			128–69	
NP151473J			105–51	1
NP151473K			105–52	1
NP151473L			105–53	1
NP151473M			105–55	1

PART NUMBER	STOCK NO.		FIG. & INDEX	TOTAL PER EQUIP
	CODE	SERIAL		
NP151473N			106–58	1
NP151475			105–42	1
NP151477A			17–179	1
NP151477B			17–185	1
NP151479B			106–25	1
NP151483			106–51	1
NP151484A			106–45	1
NP151484B			106–42	1
NP151494K			108–59	1
NP151494L			108–60	1
NP151496P			128–71	1
NP151496R			128–46	1
NP151496S			128–45	1
NP151496T			128–72	1
NP151500A			108–54	1
NP151500B			108–53	1
NP151500C			108–61	2
			128–68	
NP151500D			108–56	1
NP151500E			108–50	1
NP151661B			108–22	1
NP151661D			108–18	1
NP151704K			120–36	1
NP151716A			106–22	1
NP151716B			106–90	1
NP151716J			101–342	1
NP151716K			101–360	1
NP151716L			106–89	1
NP151716M			101–336	1
NP154192A			101–341	1
NP154192B			101–329	1
NP154192C			101–335	1
NP154192D			101–323	1
NP154192E			101–317	1
NP154192F			101–377	1
NP154192G			101–277	1
NP154192H			101–365	1
NP154192J			101–371	1
NP154192K			101–378	1
NP154192L			101–330	1
NP154192M			101–359	1
NP154192N			101–366	1
NP154192P			101–263	1
NP154192R			101–372	1
NP154192S			101–347	1
NP154192T			101–353	1
NP154192W			101–324	1
NP154192X			101–318	1
NP154192Y			101–348	1
NP154192Z			101–354	1
NP154195A			101–331	1
NP154195B			101–367	1
NP154195C			101–343	1
NP154195D			101–319	1
NP154195E			101–325	1
NP154195F			101–337	1
NP154195G			101–349	1
NP154195H			101–355	1
NP154195J			101–373	1
NP154195K			101–379	1
NP154195L			101–361	1
NP154196A			101–305	1
NP154196B			101–306	1
NP154196C			101–312	1
NP154196D			101–273	1
NP154196E			101–311	1
NP154196F			101–285	1
NP154196G			101–271	1
NP154196H			101–280	1
NP154196J			101–268	1
NP154196K			101–313	1
NP154196L			101–307	1
NP154197A			101–296	1
NP154197B			101–294	1
NP154197C			101–283	1
NP154197D			101–298	1
NP154197E			101–292	1
NP154197F			101–287	1
NP154448A			118–267	1
NP154448B			118–55	1
NP154448C			118–57	1

PART NUMBER	STOCK NO.		FIG. & INDEX	TOTAL PER EQUIP
	CODE	SERIAL		
NP154448DP7			120–35	1
NP154448E			118–53	1
NP154448F			118–54	1
NP154449A			118–80	1
NP154596U			106–20	1
NP154596V			106–88	1
NP156432R			101–265	1
NP156623A			101–300	1
NP156639A			105–49	1
NP156721A			107–133	1
NP156721B			106–56	1
NP157506			101–128	1
NP157554A			109–31	1
NP157555B			101–259	1
NP157557A			126–124	1
NP157561A			108–49	1
NP157561C			116–60	1
NP157562B			101–260	1
NP157562C			118–56	1
NP157564B			123–58	1
NP157688			101–255	1
NP157709			101–256	1
NP58914			117–15	1
NP59441B			53–10	6
			61–10	
NP72549G			39–151	18
			118–220	
			118–231	
NP76510			54–8	8
NS4W0316			95–62	6
NS4W0640	3300	333735200	66–170	4
NS4W1216			118–218	6
NS4W1224			66–196	8
N154596T			106–21	1
N936B10B			116–35	13
			116–44	
			116–59	
OD3/VR150			38–52	5
PL7013798G1			101–	1
PL7014267G1			126–	1
PL7014273G1			126–	1
PL7016627G1			118–	1
PL7018159G1			101–173	1
PL7019466G1			101–185	2
PL7019476G1			109–12	14
PL7019479G1			126–68	2
			126–80	
PL7019480G2			126–90	4
			126–92	
			126–93	
			126–94	
PL7019480G4			126–91	1
PL7019481G1			126–89	1
PL7019482G1			126–38	6
			126–61	
			126–75	
			126–76	
			126–131	
			126–134	
PL7019483G1			126–86	1
PL7019484G5			126–54	6
			126–55	
			126–57	
			126–71	
			126–82	
			126–85	
PL7021904G1			127–	1
PL7021905G1			127–	1
PL7021906G1			101–112	1
PL7021907G1			127–	1
PL7021921G1			101–111	1
PL7301656G1			102–	1
PL7407983G1			126–1	1
PL7408553G1			126–118	1
PL7409540G1			101–	1
PL7409542G1			101–	1
PL7409553G1			126–	1
PL7409591G1			127–	1
PL7409592G1			127–31	1
PL7411497G1			126–129	2
			126–136	

PART NUMBER	STOCK NO.		FIG. & INDEX	TOTAL PER EQUIP
	CODE	SERIAL		
PL7603955G1			102–	1
PL7603956G1			102–	1
PL7603957G1			103–	1
PL7603958G1			104–	1
PL7705952G1			102–11	1
PL7705958G1			102–	1
PL7705989G1			101–167	1
PL7706350G1			102–93	1
PL7706353G1			102–89	1
PL7706354G1			102–42	1
PL7706388G1			127–	1
PL7706391G1			101–	1
P1A	3300	695766838	58–37	5
			66–400	
			71–408	
			81–5	
			84–29	
P4265888LAP3			117–19	1
P512305P15			84–2	1
P7700311P2			40–149	3
P7700312P1			40–194	3
P7700312P2			40–195	3
P7700314P2			90–56	1
P7700314P5			90–54	2
P7700314P6			90–55	2
P7700330P1			30–74	6
P7700346P1			33–28	5
P7700347P1			33–25	3
P7700348P1			34–1	5
P7700364P2			28–261	5
P7700524P1	3300	226011969	66–	5
			71–	
P7700653P1			2–365	5
			3–358	
			4–360	
			5–	
			6–	
P7700660P1			2–95	5
			3–96	
			4–98	
			5–	
			6–	
P7700690P1			55–72	5
P7700690P2			55–50	5
P7700690P3			55–23	15
P7700708P1	3300		54–	6
P7700708P2	3300		54–	2
P7700709P1			53–	5
P7700718P32			30–125	5
P7700764P85			107–233	2
			107–313	
P7700896P1			28–2	5
P77002825P1			55–81	5
P7702835P1			118–152	1
P7702920P22			126–31	6
			126–40	
			126–56	
			126–67	
			126–77	
			126–83	
P7702920P24			107–230	1
P7702920P28			107–312	1
P7702920P5			107–229	5
			107–291	
			107–296	
			107–300	
			107–305	
P7703064P1			55–114	5
P7703064P2			55–115	5
P7703082P1			2–342	5
			3–335	
			4–337	
			5–	
			6–	
P7703143P1			2–418	5
			3–410	
			4–413	
			5–	
			6–	
P7703144P1			2–129	5

PART NUMBER	STOCK NO. CODE	STOCK NO. SERIAL	FIG. & INDEX	TOTAL PER EQUIP
P7703144P1 (Cont)			3–129	
			4–131	
			5–	
			6–	
P7703271P4			35–214	5
P7705502P2			108–39	1
P7762919P3	3300	397503985	92–67	1
P7763541P2			126–110	3
P7763541P3			63–65A	4
P7763541P5			101–40	5
P7664879P2			38–94	5
P7768146P1	3300	394352480	17–102	18
			17–104	
			32–74	
			35–51	
			36–56	
P7768146P30	3300	394374469	17–67	7
			17–98	
			35–153	
P7768146P4	3300	394386296	32–85	43
			34–46	
			36–57	
			38–69	
			38–70	
			38–71	
			38–72	
			38–73	
			64–152	
			64–153	
			77–105	
P7768146P5	3300	394387031	17–77	25
			28–101	
			28–102	
			32–86	
			35–49	
			40–157	
			68–58	
P7768146P7	3300	394388370	17–103	1
P7770419P111	3300	389686140	26–110	10
			26–114	
P7770419P119	3300	381167920	34–97	13
			34–99	
			44–48	
P7770419P121	3300	381168400	45–30	3
P7770419P127	3300	381169600	46–124	6
			46–127	
P7770419P131			37–107	40
			37–108	
			44–50	
			46–102	
			46–104	
			46–109	
			46–111	
			46–114	
			46–117	
			46–121	
			47–111	
			47–121	
P7770419P133	3300	381170920	45–27	3
P7770419P135			28–	36
			28–27	
			34–96	
			36–141	
			37–111	
			37–129	
			47–107	
			47–126	
P7770419P139	3300	381167000	21–133	92
			21–134	
			21–135	
			21–136	
			21–137	
			21–138	
			21–142	
			21–143	
			26–103	
			26–107	
			26–108	
			26–112	
			26–116	

PART NUMBER	STOCK NO. CODE	STOCK NO. SERIAL	FIG. & INDEX	TOTAL PER EQUIP
P7770419P139 (Cont)			26–118	
			36–140	
			37–123	
			37–125	
			37–126	
			37–133	
			37–135	
			37–137	
			37–138	
			37–140	
			45–29	
			45–31	
			46–101	
P7770419P143	3300	381167980	21–115	74
			21–117	
			21–119	
			21–121	
			21–130	
			21–131	
			21–132	
			21–140	
			26–97	
			26–99	
			26–101	
			26–104	
			26–106	
			26–111	
			26–115	
			26–117	
			26–119	
			37–110	
			37–130	
			37–136	
			44–54	
			46–119	
P7770419P147	3300	381168820	21–123	53
			21–125	
			26–98	
			26–100	
			26–102	
			37–113	
			37–114	
			37–117	
			37–119	
			37–124	
			37–130	
			46–103	
			47–119	
P7770419P151	3300	381169660	40–199	12
			47–108	
			47–116	
			47–120	
P7770419P159	3300	381166080	21–127	22
			40–124	
			46–110	
			46–120	
			46–126	
			46–129	
			47–103	
			47–106	
P7770419P163	3300	381167060	21–116	19
			21–126	
			21–141	
			26–105	
			26–120	
			46–123	
			47–103	
P7770419P167	3300	381168040	21–128	35
			26–109	
			26–113	
			36–66	
			37–109	
			37–112	
			46–62	
			46–63	
			46–118	
P7770419P169	3300		21–120	2
			21–124	
P7770419P170			21–118	2
			21–122	

PART NUMBER	STOCK NO. CODE	STOCK NO. SERIAL	FIG. & INDEX	TOTAL PER EQUIP
P7770419P171	3300	381168880	26–121	21
			36–137	
			37–139	
			46–58	
			46–128	
P7770419P179	3300	381170560	21–139	23
			46–105	
			46–106	
			46–107	
			46–108	
			46–112	
			46–113	
			46–115	
			46–116	
			46–122	
P7770419P183	3300	381166140	34–38	35
			44–47	
			44–51	
			44–52	
			44–55	
			44–56	
			47–100	
			47–110	
			47–113	
			47–122	
			47–123	
P7770419P187	3300	381167120	36–65	5
P7770419P195	3300	381168940	36–135	20
			37–115	
			37–121	
			37–128	
P7770419P199	3300	381169780	40–126	9
			44–59	
			44–62	
P7770419P203			40–125	3
P7770419P211	3300	381167180	47–128	3
P7770419P219	3300	381169000	36–63	20
			37–122	
			37–127	
			37–134	
P7770419P223	3300	381169840	21–129	6
			36–136	
P7770419P227	3300	381170680	34–35	5
P7770419P231	3300	381166264	40–127	9
			40–128	
			46–125	
P7770419P235			2–410	5
			3–402	
			4–405	
			5–	
			6–	
P7770419P239	3300	381168220	34–101	20
			34–102	
			34–106	
			34–107	
P7770692P1			64–117	1
P7770781P1			17–83	1
P7770782P6			107–151	9
P7770822P3	3300	295957366	32–12	36
			32–13	
			34–21	
			36–8	
			37–16	
			37–17	
			37–18	
			78–4	
P7770822P6	3300	295578981	32–9	36
			34–6	
			36–6	
			37–6	
			78–2	
P7770834P30	3300	39488033	28–104	10
			28–105	
P7770835P1	3300	394296247	45–7	4
			107–124	
P7770835P11			107–126	1
P7770835P12			107–119	1
P7770835P17	3300	394368342	35–53	10
			63–68	
			63–69	

PART NUMBER	STOCK NO. CODE	STOCK NO. SERIAL	FIG. & INDEX	TOTAL PER EQUIP
P7770835P17 (Cont)			63–70	
			63–71	
			63–72	
P7770835P20	3300	399808090	105–122	2
			106–31	
P7770835P22	3300	394384090	32–84	20
			35–52	
			36–55	
			47–83	
			68–57	
			107–122	
P7770835P27	3300	394387031	106–30	2
			107–121	
P7770835P33			123–63	1
P7770835P35	3300	399812039	107–125	1
P7770835P37	3300	399812323	107–120	1
P7770835P4			107–123	1
P7770835P9	3300	394340376	28–106	18
			32–83	
			34–47	
			44–17	
P7770998P10	3300	395499433	105–41	1
P7770998P11	3300	395499437	32–82	8
			40–162	
P7770998P3	3300	395499420	106–50	1
P7770998P7	3300	395499418	35–40	5
P7770998P8	3300	395499422	38–	5
			38–144	
P7771492P1			66–184	2
			71–184	
P7771664			118–	1
P7771760P2	3300		61–	2
P7771760P6	3300		61–	1
P7771770P1			58–84	4
			81–58	
P7771802P1			62–3	1
P7771805P1			77–8	1
P7771820P2			58–83	4
P7771820P3			58–83A	1
P7771831P1			60–1	1
P7771833P1			92–40	1
P7771837P1			17–152	1
P7771838P2			17–149	1
P7771846P9			20–4	4
P7771849P2			65–49	1
P7771850P1			65–65	1
P7771850P2			65–64	1
P7771853P1			92–104	1
P7771854P2			92–17	1
P7771867P1			79–120	1
P7771867P2			79–121	1
P7771867P3			79–122	1
P7771867P4			79–123	1
P7771869P1			35–11	5
P7771875P1			38–105	5
P7771880P1			39–3	5
P7772500P1			71–76	1
P7772516P1			66–36	1
P7772549P1			41–4	3
P7772551P4			22–32	5
P7772555P1			22–67	5
P7772555P2			22–68	5
P7772559P1	3300	373045316	23–45	15
P7772559P3	3300	373045318	25–24	15
			25–30	
P7772559P7	3300	373045314	23–29	20
			23–46	
P7772563P1			25–31	5
P7772565P1			56–9	5
P7772570P1			2–205	5
			3–205	
			4–207	
			5–	
			6–	
P7772589P1			50–20	5
P7772589P2			52–27	5
P7772589P3			61–16	5
P7772589P4			49–2	5
P7772592P8			52–31	10
P7772592P9			52–30	10

PART NUMBER	STOCK NO. CODE	STOCK NO. SERIAL	FIG. & INDEX	TOTAL PER EQUIP
P7772595P2			2–65	5
			3–66	
			4–68	
			5–	
			6–	
P7772599P1			56–8	15
P8111235BGP2			117–20	1
P8322723P21			99–	1
P9206412P144			98–60	4
P9206412P21			97–	1
P9535197P22			89–10	1
P9535197P23			89–11	1
P9535607P22			88–1	1
P9535607P26			88–18	1
P9535607P39			88–49	1
P9535607P40			88–47	1
P9535607P41			88–48	1
P9535607P57			88–29	1
P9535610P22			87–1	1
P9535610P34			87–12	3
P9535610P36			87–15	1
P9535610P37			87–11	2
P9535615G1			89–44	1
P9535617P22			86–21	4
P9535617P23			86–1	1
P9535617P24			86–11	1
P9535617P25			86–2	3
P9535617P26			86–8	1
P9535617P27			86–9	2
P9535617P28			86–22	4
P9535617P29			86–26	4
QK229/RK5657	3300	235793300	3–23	2
			4–25	
QK254	3300	284000000	118–32	1
R–82–S			94–22	4
RA–5575			113–5	2
			115–17	
RA–7925			112–47	1
RA–7933			112–43	1
RA–7934			112–45	1
RA–8026B			112–	1
RA–8091			113–19	6
RA–8092			113–12	2
RA–8093			113–13	AR
RA–8125			112–	1
RA–8126			112–48	1
RA–8127			112–44	1
RA–8163–1			115–13	1
RA–8164–1			115–12	1
RA–8167			115–9	2
			115–15	
RA–8169			115–5	2
RA–8171			115–14	1
RA–8179			115–3	4
RA–8365–7			112–32	2
			112–34	
RA–8365–8			112–27	1
RA–9502			112–12	1
RA–9506–1			112–51	1
RA–9506–2			112–10	1
RA–9661			113–11	4
			113–16	
RA–9662			113–10	4
			113–18	
RA–9666			113–17	2
RA20A2SA3R0AK			121–40	1
RA20A2SD500AK	3300	380030110	35–48	5
RA20A2SD8R0AK			116–148	1
RA30A2SD501AK			28–103	5
RA30A2SD502AK	3300	380051160	40–156	3
RB–8081–1			113–7	1
RB–8082–1			113–22	1
RB–8170			115–1	1
RB–9503			112–40	1
RB–9635–4			114–	1
RB–9664			113–14	2
RC20BF100J	3300	381165960	17–329	2
RC20BF101J	3300	381166020	78–43	4
RC20BF102J	3300	381160760	17–358	22
RC20BF103J	3300	381166140	32–112	37

PART NUMBER	STOCK NO. CODE	STOCK NO. SERIAL	FIG. & INDEX	TOTAL PER EQUIP
RC20BF104J	3300	381166200	17–165	116
RC20BF104K			116–117	2
RC20BF105J	3300	381166264	17–311	55
RC20BF151J	3300	381167000	107–283	2
RC20BF152J	3300	399667697	28–174	18
RC20BF154J	3300	381167180	35–187	45
RC20BF185J			107–244	1
RC20BF220J	3300	381167920	107–212	1
RC20BF221J	3300	381167980	17–310	33
RC20BF222J	3300	381168040	35–204	14
RC20BF223J	3300	381168100	17–147	16
RC20BF224J	3300	381168160	38–119	43
RC20BF225J	3300	381168220	38–299	16
RC20BF225K			116–119	1
RC20BF330J	3300	381168760	36–89	12
RC20BF331J	3300	381168820	17–349	91
RC20BF332J	3300	381168880	37–120	15
RC20BF333J	3300	381168940	77–140	6
RC20BF334J	3300	381169000	35–189	35
RC20BF392J			126–69	1
RC20BF420J			106–145	1
RC20BF470J			105–192	4
RC20BF471J	3300	381169660	17–164	28
RC20BF472J	3300	381169720	17–359	7
RC20BF473J	3300	381169780	77–138	3
RC20BF473M			38–229	5
RC20BF474J	3300	381169840	17–357	17
RC20BF563J			107–273	1
RC20BF680J	3300	381170440	68–68	13
RC20BF680K			116–84	1
RC20BF681J	3300	381170500	78–52	6
RC20BF682J	3300	381170560	17–335	6
RC20BF683J	3300	381170620	17–331	9
RC20BF684J	3300	381170680	32–139	45
RC20BF685J			123–114	1
RC30BF100J			38–226	10
RC30BF101J	3300	381316020	2–249	21
RC30BF102J	3300	381316080	36–90	40
RC30BF103J	3300	381316140	36–64	10
RC30BF104J	3300	381316200	32–129	10
RC30BF151J	3300	381317000	2–248	10
RC30BF153J	3300	381317120	17–334	14
RC30BF222J	3300	381318040	64–104	2
RC30BF222M			47–117	3
RC30BF223J	3300	381318100	36–62	11
RC30BF224J	3300	381318160	27–56	17
RC30BF332J	3300	381318880	32–146	26
RC30BF333J	3300	381318940	36–93	24
RC30BF334J	3300	381319000	32–140	5
RC30BF470J	3300	381319600	105–186	3
RC30BF472J	3300	381319720	27–19A	37
RC30BF473J	3300	381319780	34–36	5
RC30BF474J	3300	381319840	64–99	1
RC30BF680J	3300	381320440	2–250	20
RC30BF682J	3300	381320560	47–115	4
RC30BF683J	3300	381320620	35–165	15
RC40BF102J	3300	381516090	38–256	10
RC40BF103J	3300	381516140	38–282	21
RC40BF104J	3300	381516200	64–92	3
RC40BF152J	3300	381517060	38–245	10
RC40BF153J	3300	381517120	17–330	2
RC40BF154J	3300	381517180	32–130	7
RC40BF182K			71–287	3
RC40BF222J	3300	381518055	17–352	23
RC40BF223J	3300	381518100	76–32	3
RC40BF224J	3300	381518160	65–31	3
RC40BF330J	3300	381604290	28–315	30
RC40BF330K			28–210	10
RC40BF332J	3300	381518880	17–313	49
RC40BF333J	3300	381518940	32–113	22
RC40BF472J	3300	381519720	36–95	15
RC40BF473J	3300	381519780	77–136	1
RC40BF474J	3300	381519840	27–54	10
RC40BF680J	3300	381520450	17–300	1
RC40BF681J	3300	381520500	26–122	10
RC40BF682J	3300	381520560	17–317	37
RC42BF104J			121–23	1
RC42BF152J			107–215	1
RC42BF153J			106–144	2
RC42BF154J			105–125	1

PART NUMBER	STOCK NO. CODE	STOCK NO. SERIAL	FIG. & INDEX	TOTAL PER EQUIP
RC42BF222J			116–135	1
RC42BF332J			105–183	4
RC42BF471J			118–212	1
RC42BF473J			118–213	1
RC42BF682J			105–193	3
RD–8161–2			115–	1
RD–9505			113–	1
RD–9505–1			113–	1
RG–8160–3			115–	1
RG–9501			112–	1
RG–9501–2			112–1	1
RG21/U	3300	132335602	17–187	AR
RG5/U	3300	132335567	17–166	AR
RG55/U	3300	132335652	2–482	AR
RG59/U	3300	150425790	2–424	AR
RG6/U			21–46	AR
RG71/U	3300	132335690	2–411	AR
RG8/U	3300	132335582	17–175	AR
RP101SA2R5KK			121–41	1
RP101SD150KK	3300	383039110	92–66	1
RP151SD3R0KK	3300	383012020	39–14	5
RR–9500B			112–	1
RU4B2R2K			116–81	1
RU4C102K			116–80	1
RW10F252			66–304	4
RW11F101	3300	385183330	2–223	10
RW11F102			2–224A	5
RW14F103	3300	385303040	64–28	1
RW14F632			38–120	9
RW15G101			118–177	1
RW16F202	3300	385261060	38–24	15
RW16F252	3300	385267340	38–202	5
RW16F312	3300	385273140	38–203	15
RW16F401			75–152	1
RW16F800	3300	385177100	18–8	4
RW31G401			116–149	2
RW33GR31			105–164	1
RW33G102			105–165	1
RW33G632			105–163	1
RW34F103			118–250	1
RX1240			101–235	1
R107–5			126–96	85
SA57–2106			75–97	2
			85–31	
SC1A			38–80	5
SG8045			116–14	1
SG8046			116–13	1
SJ21001	3300	294920241	76–14	7
			76–15	
			76–16	
			76–17	
			76–18	
			76–19	
			76–20	
SK11007			116–15	2
			116–16	
SK1947–8	6600	149857	28–139	40
SK5001	3300	298381387	17–35	51
			35–114	
			35–115	
			35–116	
			35–117	
			35–118	
			35–119	
			35–120	
			39–85	
			63–4	
			63–5	
			63–6	
			63–7	
			63–8	
			63–9	
			63–10	
			63–11	
			63–12	
			63–13	
SK5122			36–25	5
SK5123			36–26	26
			36–27	
			36–28	

PART NUMBER	STOCK NO. CODE	STOCK NO. SERIAL	FIG. & INDEX	TOTAL PER EQUIP
SK5123 (Cont)			106–72	
			106–73	
			106–74	
			106–75	
			106–76	
			107–73	
			107–74	
			107–75	
			116–48	
			116–49	
			123–25	
SK5127			39–86	10
			75–113	
			75–114	
			75–116	
			75–117	
SK5161			32–55	8
			40–10	
SPP–3			118–108	2
			118–186	
SPP–9			118–95	4
			118–185	
SRFBC–220–3			96–10	1
SS–975A			116–155	1
SS03B20	3300	395033174	69–52	8
SS04A20	3300	395033183	33–4	10
ST22N	3300	395739045	2–278	110
ST42A			112–18	1
ST52N	3300	395853615	28–124	20
ST52P			35–33	15
ST52S	3300	395853628	22–42	26
S0S3			32–18	103
S0S6			28–220	33
S010M	8850	882860	34–12	226
S310–64BB			7–12	5
S9441			100–7	1
S961			118–161	1
TH			23–11	5
TH13	3300	287222617	28–187	5
TH15	3300	287222618	2–183	34
			3–183	
			4–185	
			5–	
			6–	
			17–343	
			36–78	
			38–220	
			105–159	
			123–78	
TH17	3300	287222619	17–34	48
			32–117	
			35–159	
			38–213	
			38–328	
			39–136	
			64–105	
			77–108	
			78–22	
			123–79	
TRL–86005			101–157	1
TSB8/101			90–121	30
TSB8/102			90–168	3
TSB8T101			17–18	327
TSE7T102			121–7	1
TSF0T101			116–51	1
TSF0T102			121–5	1
TS101P01			107–108	7
TS102C01			116–99	1
TS102P01			107–79	15
TS102U01			123–6	3
TS102U02			123–4	2
TS102U03			107–45	2
TS103P01			9–17	15
TS103U02			107–35	21
T100–3			2–255	1908
			3–255	
			4–257	
			5–	
			6–	
			17–150	

PART NUMBER	STOCK NO.		FIG. & INDEX	TOTAL PER EQUIP
	CODE	SERIAL		
TT00–3 (Cont)			17–323	
			17–348	
			27–63	
			28–182	
			28–193	
			28–216	
			28–321	
			32–125	
			32–136	
			34–4	
			34–43	
			34–62	
			35–177	
			35–197	
			36–104	
			36–119	
			38–240	
			38–251	
			38–267	
			38–295	
			38–311	
			38–333	
			40–133	
			46–68	
			46–78	
			47–44	
			47–79	
			47–99	
			63–138	
			64–110	
			64–205	
			65–37	
			68–79	
			76–49	
			76–117	
			77–148	
			78–58	
			79–67	
			90–86	
			90–222	
			105–202	
			106–150	
			107–4	
			121–32	
			126–140	
T7600940P1			118–145	1
T7664492P27			27–50	24
T7664492P36			17–38A	2
T7664839P1			63–42	1
T7664840P1			63–3	1
T7664858P1			63–124	1
T7664858P2			63–108	1
T7664869P1			23–1	1
T7664877P21			76–28	4
T7664879P1			38–83	5
T7664889P1			17–3	1
T7664896P1			35–3	5
T7664897P1			35–81	5
T7664897P2			35–76	5
T7665255P1			38–3	5
T7665258P1			82–1	1
T7665259P1			39–45	5
T7665259P2			39–44	5
T7665260P1			39–57	5
T7665275P1			22–3	5
T7665286P1			55–77	5
T7665291P1			2–339	4
T7665293P7			55–71	5
			3–332	
			4–334	
			5–	
			6–	
T7665292P2			2–25	5
			3–26	
			4–28	
			5–	
			6–	
T7665293P7			55–71	5
T7666704P1			77–43	1
T7666704P2			77–42	1
T7666706P1			21–2	1

PART NUMBER	STOCK NO.		FIG. & INDEX	TOTAL PER EQUIP
	CODE	SERIAL		
T7666709P25			21–49	2
T7666715P1			76–3	1
T7666718P1			75–92	1
T7666718P2			75–93	1
T7666721P1			75–66	1
T7666730P2			92–38	1
T7666732P2			65–3	1
T7666738P1			17–160	1
T7666738P2			17–159	1
T7666748P1			79–105	1
T7666802P1			90–42	1
T7666816P1			30–80	5
T7666817P1			30–134	5
T7666818P1			30–52	5
T7666819P1			30–12	5
T7666833P1			28–129	5
T7666834P1			29–3	5
T7666842P31			33–34	5
T8309745P28			88–46	2
T8309745P31			88–41	1
T8309745P60			88–11	1
T8309745P61			88–38	1
T8309745P62			88–12	1
T8309745P63			88–17	1
T8309745P64			88–7	1
T8309745P66			88–16	1
T8309745P67			88–15	1
T84–2			44–30	24
T9524504P22			84–25	1
T9524504P23			84–26	1
T9524504P28			84–30	1
T9524504P34			84–20	1
T9524504P41			84–21	1
T9524504P45			84–17	1
T9524504P60			84–24	1
T8524508P25			85–50	1
T9524508P26			85–52	1
T9524508P27			85–51	1
T9524508P28			85–53	1
T9524520P22			89–37	1
T9524520P23			89–38	1
T9524520P24			89–35	1
T9524520P25			89–36	1
T9524520P31			89–28	3
T9524520P37			89–23	1
T9524520P38			89–19	1
T9524520P39			89–18	1
T9524520P41			89–31	1
T9524520P46			89–24	3
T9524520P50			89–39	4
UG160/U	3300	294732447	17–176	4
UG177/U			28–147	15
UG18/U	8850	467440	2–402	46
UG18B/U			129–37	2
UG19/U	8850	651776	2–443	10
UG201/U	8850	101950	92–73	7
UG21/U	8850	467455	17–167	4
UG21B/U			129–14	6
UG254A/U			118–74	6
UG260/U	8850	469685	2–232	174
UG262/U	8850	653108	2–349	102
UG27A/U	8850	108715	2–404	22
UG274/U	3300	298296849	40–144	6
UG290/U	8850	654218	2–234	107
UG291/U	8850	654440	40–66	3
UG306/U			2–233	39
UG355/U			123–38	1
UG37A/U	8850	668470	2–187	15
UG414/U	3300	286051078	35–23	15
UG58/U	8850	668570	28–145	22
UG88/U	8850	468450	2–483	21
V1564010			98–36	2
V1569013			88–21	1
V2236852			23–39	20
			25–4	
			33–14	
V2949783			97–9	1
V36MO	3300	312872059	40–102	3
V414749			98–32	4
V6863007P22			98–51	6

PART NUMBER	STOCK NO. CODE	STOCK NO. SERIAL	FIG. & INDEX	TOTAL PER EQUIP
V8381266P21			86–36	1
V8381660P21			98–48	2
V8381663P21			99–13	1
V9228665P21			98–29	2
V9260367P21			84–12	2
V9260467P21			98–16	2
V926497P2			97–5	1
W3150			101–212	1
W7300316P42			67–40	8
			72–40	
W7300316P49			67–45	2
			72–45	
W7300316P50			67–46	2
			72–46	
W7300316P51			67–47	2
			72–47	
W7300316P53			67–35	2
			72–35	
W7300316P65			67–15	8
			67–	
			72–15	
			72–	
W7300316P66			67–36	2
			72–36	
W7300316P68			67–14	16
			67–24	
			72–14	
			72–24	
W7300316P69			67–30	16
			67–41	
			72–30	
			72–41	
W7300316P70			72–25	4
W7352546P1			64–1	1
W7352557P11			64–81	7
			64–179	
W7352557P12			64–82	2
W7352666P11			63–128	2
W7352666P12			63–43	2
W7353027P64			59–39	4
W7353027P65			59–43	2
W7353027P69			59–7	2
W7353027P72			59–14	8
W7353027P77			59–44	4
W7353027P78			59–49	8
W7353027P82			59–32	8
W7353027P83			59–28	2
W7353027P84			59–25	2
W7353057P59			39–99	10
W7353090P50			23–53A	AR
W7353099P62			55–40	5
W7353099P63			55–38	5
W7353099P64			55–39	5
W7353300P44			2–103	20
			3–103	
			4–105	
			5–	
			6–	
W7353301P1			55–147	5
W7353906P1			77–3	1
W7353921P1			79–3	1
W7353923P20			17–206	1
W7353923P21			17–207	1
W7354024P104			30–68	10
W7354025P1			40–2	3
W9502850P39			83–3	2
W9502850P40			83–4	2
XRC319			15–27	1
Z–16131			118–263	1
Z–1898			109–15	14
			109–16	
			109–17	
			109–18	
			109–19	
			109–20	
			109–21	
			109–22	
			109–23	
			109–24	
			109–25	
			109–26	

PART NUMBER	STOCK NO. CODE	STOCK NO. SERIAL	FIG. & INDEX	TOTAL PER EQUIP
Z–1898 (Cont)			109–27	
			109–28	
0A2	3300	234005100	32–25	15
0A3/VR75	3300	234005500	38–49	10
0B2	3300	234006000	32–24	26
0C3			105–80	2
0C3/VR105	3300	234006500	64–25	1
0D3			105–82	5
0D3/VR150	3300	234006700	17–17	10
001–75004			118–38	1
07087			98–46	1
07204			98–47	1
1B56	3300	234028000	5–	10
1B58	3300	234028050	2–379	3
			101–147	
1N21B	3300	234137020	2–181	22
1N21C			2–384	7
1N69	3300	234138400	46–59	6
10–A5			118–157	1
1003A–1			43–17	2
			43–19	
10061	3300	286410726	17–66	116
			17–92	
			17–100	
			20–2	
			32–72	
			34–45	
			35–47	
			35–152	
			36–54	
			38–67	
			39–13	
			40–155	
			44–16	
			45–6	
			47–82	
			64–151	
			68–55	
			105–120	
			107–117	
			116–147	
			123–61	
101HD			101–51	1
101P2GE			2–82	5
			3–83	
			4–85	
			5–	
			6–	
101002			106–115	2
1020			23–26	5
1028			34–19	47
			44–14	
			47–24	
103B			101–54	1
1042	8800	361210	95–69	1
1043	8800	356650	96–23	1
1046	8800	356110	64–	2
1047	8800	356170	64–	1
1052			32–34	37
			46–26	
1060			32–33	35
			40–48	
			107–93	
			116–102	
			121–10	
			123–14	
1075–A	8800	619703	95–104	2
			95–106	
1103			2–242	264
			2–355	
			2–436	
			2–465	
			3–242	
			3–348	
			3–428	
			3–457	
			4–244	
			4–350	
			4–431	
			4–460	
			5–	

PART NUMBER	STOCK NO. CODE	STOCK NO. SERIAL	FIG. & INDEX	TOTAL PER EQUIP
1103 (Cont)			6–	
			17–272	
			123–46	
1104			95–19	1
1114			96–19	3
1116	6600	324940	95–100	1
1185–2C			109–10	8
12AT7	3300	234942000	36–7	13
12AU7	3300	234942300	78–3	5
12AX7	3300	234942400	32–10	16
1203			2–374	314
			3–367	
			4–369	
			5–	
			6–	
			35–26	
			36–72	
			66–27	
			66–85	
			66–249	
			66–363	
			66–427	
			71–22	
			71–52	
			71–261	
			71–387	
			71–436	
			71–444	
			76–77	
			78–36	
			82–29	
			92–123	
1205			116–110	4
1210			95–65	10
122–244			66–89	4
			66–90	
			66–100	
122–244–7			118–203	1
1222–1			2–283	162
			3–283	
			3–390	
			4–285	
			4–393	
			5–	
			6–	
			28–127	
			35–35	
			58–55	
			58–61	
			58–76	
			62–62	
			63–95	
			63–104	
			66–266	
			66–334	
			68–53	
			71–270	
			71–332	
			75–40	
			75–43	
			75–45	
			81–12	
			81–18	
			81–33	
			90–41	
			92–61	
1228–2			17–173	129
			28–122	
			52–7A	
			62–43	
			64–147	
			64–171	
			77–28	
			79–22	
			90–235	
			105–35	
			118–195	
			118–196	
			118–197	
123D1726	3300	371344013	27–45	6

PART NUMBER	STOCK NO. CODE	STOCK NO. SERIAL	FIG. & INDEX	TOTAL PER EQUIP
1322	8800	356100	64–	6
14B812			85–38	1
14B828			86–58	6
14B856			85–40	1
14B858			85–39	1
14F360			66–349	5
			66–350	
			71–355	
			71–356	
			71–357	
14F361	3300	293366241	66–351	5
			66–352	
			71–352	
			71–353	
			71–354	
14F363			118–20	1
14F396	3300	319001271	85–20	1
140623HT			94–7	1
141–Y			107–135	16
14238			123–49	1
1430–00			122–17	2
1431–00			122–18	2
1477			107–22	14
			107–25	
1500–28			96–16	1
160–305	3300	312948700	45–18	3
1604–167			112–37	1
168FT			101–57	2
			118–37	
17119			98–42	1
172444B			98–41	1
1824			2–83	5
			3–84	
			4–86	
			5–	
			6–	
1828			66–395	4
			71–397	
190232			31–5	58
			42–5	
1903			26–33	60
			40–181	
			106–140	
1904			28–98	64
			35–30	
			63–60	
			63–65C	
1906			51–5	40
			56–34	
			66–379	
			71–375	
1908			58–4	75
			66–435	
			71–453	
			92–15	
			92–22	
			92–42	
			92–106	
			92–112	
191P10404			121–11	1
1910			2–49	859
			2–52	
			3–50	
			3–53	
			4–52	
			4–55	
			5–	
			6–	
			50–7	
			55–3	
			55–193	
			90–19	
			90–45	
			90–61	
			92–69	
1914			66–340	63
			66–393	
			66–418	
			71–340	

PART NUMBER	STOCK NO. CODE	STOCK NO. SERIAL	FIG. & INDEX	TOTAL PER EQUIP
1914 (Cont)			71–343	
			71–425	
			91–47	
1918			19–7	136
			66–346	
			66–357	
			71–351A	
			71–359	
1920–2			34–49	77
			36–59	
			68–56	
			68–60	
			107–118	
			107–128	
			108–48	
			123–62	
			123–65	
1922–01			105–38	7
			106–47	
			128–66	
1924–2			22–43	10
1928			123–39	8
			128–59	
1969			47–80	3
2.6–20			118–253	2
2–550	3300	295553925	22–41	15
			62–68	
			62–69	
			62–70	
			62–71	
			62–72	
2BP1	3300	234183200	28–88	5
2D21			121–6	1
2K28	3300	234199000	19–1	11
200PH15	3300	295594933	94–17	4
201–786A			114–11	1
201–788			114–2	1
201–948C			114–4	1
201–949			114–18	1
201–950			114–1	1
202–052A			114–20	1
202–065			114–9	1
202–066			114–8	1
202–108			114–12	1
202–168			114–6	1
20389–8			116–27	2
			116–28	
2101–10–00			71–131	2
2102–04–00			114–16	3
211			86–42	6
			86–43	
			86–44	
			86–45	
			86–46	
			86–47	
211SB	8850	771636	66–46	8
			66–47	
			66–217	
			71–91	
			71–92	
			71–93	
			71–225	
			71–226	
212A3	3300	395618200	39–19	5
216–3–12			7–47	15
2161–1			43–3	6
2162–2			43–	3
22M02			13–24	10
2336			123–100	2
			123–101	
2496–5			43–	3
2515.13–5			118–252	2
26–SA–36	3300	373642636	61–1	3
26–SA–77	3300	373642635	53–1	13
			54–1	
26F67			99–1	1
26F700	3300	314767205	2–219	5
			3–219	
			4–221	
			5–	
			6–	

PART NUMBER	STOCK NO. CODE	STOCK NO. SERIAL	FIG. & INDEX	TOTAL PER EQUIP
26F752			118–171	1
26F828			118–168	1
26P86			117–2	1
26P87			117–1	1
260B1			43–9	3
2600–10			90–7	12
2600–6			66–397	24
			71–405	
2600–8			90–52	8
261A4			43–10	3
2679	8800	580600	58–8	7
			66–261	
			71–265	
			79–23	
			79–24	
			85–36	
			128–60	
275–5	6600	574866–8	40–138	12
275C	3300	299842270	28–237	13
			28–238	
			40–34	
2750			43–1	3
2750A			43–6	3
2764			101–70	1
2788			66–344	2
			71–347	
29828–22			115–39	1
3–34			96–1	1
3144–1–A–440			118–39	1
323HI–K			120–10	9
			120–11	
			120–12	
			120–13	
			120–14	
			120–15	
			120–16	
			120–17	
			120–18	
324–04HI–K			123–66	2
			123–67	
3302			2–93	10
			2–364	
			3–94	
			3–357	
			4–96	
			4–359	
			5–	
			6–	
3363S10	8800	052617–4	79–28	1
345	3300	235793650	4–377	2
			4–378	
346	3300	235793655	3–375	2
			3–376	
3527–32			43–7	3
36001	3300	287233020	66–111	11
			66–115	
			71–85	
			71–110	
			71–114	
36002	3300	287222500	66–41	5
			66–60	
			71–220	
36198–107			115–37	2
3625			43–16	AR
36412–68			115–23	1
368	3300	235380785	3–372	3
			4–374	
			6–	
37KDD			115–27	1
37027			101–56	1
371B	3300	235380100	66–44	14
			66–45	
			66–61	
			71–88	
			71–89	
			71–90	
			71–223	
			71–224	
			86–15	
			86–16	

PART NUMBER	STOCK NO. CODE	STOCK NO. SERIAL	FIG. & INDEX	TOTAL PER EQUIP
371B (Cont)			86–17	
			86–18	
			86–19	
			86–20	
37290			101–55	1
39KDD			115–31	1
397			118–30	2
			118–31	
41FS			101–49	1
44FN			101–46	2
			101–50	
45			59–15	2
			90–9	
471006–1/4	8800	529470	92–43	2
			92–45	
5A97			31–	8
			42–	
5C22	3300	234328200	66–87	8
5KCP25AC7			100–	1
5KH33KD75			53–	5
5KH35AC330			61–	3
5KH48BB21			54–	8
5K65EC140			117–	1
5R4GY	3300	234355000	68–13	37
50 (Light)	8800	529202–956	95–102	1
50 (Wire)			92–33	AR
500–500			107–154	6
			116–122	
			116–138	
500–625			107–164	6
500–800			121–12	1
5000–86			115–28	1
5001–86			115–24	1
501	3300	299980002	75–122	2
			75–123	
51101–111			112–14	1
53410–995	8800	529204–225	28–112	120
			28–114	
			28–115	
			28–116	
			28–117	
			38–147	
			38–149	
			38–150	
			38–151	
			38–152	
			38–153	
			38–154	
			38–155	
			38–156	
			38–157	
			38–158	
			38–159	
			38–160	
			38–161	
			38–162	
			64–122	
			64–123	
			64–124	
			64–125	
			64–126	
			64–127	
			64–128	
			64–129	
			64–130	
			64–131	
			105–18	
			105–20	
			105–21	
			105–22	
			105–23	
5595–8			43–12	6
56–SA–85			117–5	1
5654/6AK5W			107–51	9
5687			107–38	2
57–PP–144	3300	347328251	61–5	3
57–SA–577	3300	347328250	63–4	1
57–SA–589	3300	347328253	54–4	8
570066			71–60	16
			71–242	

PART NUMBER	STOCK NO. CODE	STOCK NO. SERIAL	FIG. & INDEX	TOTAL PER EQUIP
570066 (Cont)			71–349	
570067			71–361	24
			90–206	
570069			90–210	8
5725/6AS6W			107–49	4
5726/6AL5W			107–58	3
5726693AB484			88–35	1
5729215G4			75–46	4
			75–47	
			108–35	
			108–36	
576			118–188	1
58–212BE			67–6	4
			67–16	
			72–6	
			72–16	
58–381BE			59–2	2
5842			126–11	1
5847			126–12	1
5949			118–96	1
6–121			112–26	1
6–146			113–2	1
6AC7W	3300	234435500	17–13	7
6AG7	3300	234445000	36–19	9
6AH6			107–47	2
6AK5	3300	234450000	21–5	131
6AL5	3300	234452000	34–9	15
6AS6	3300	234454100	47–12	6
6AS7G	3300	234454125	38–20	40
6A5GT			17–16	1
6J6	3300	234560000	28–221	29
6L6GA	3300	234621000	64–20	4
6RS5C37	3300	373890878	28–289	8
			40–19	
6RS5FB40			116–65	2
			116–66	
6RS5HB54	3300	373890879	81–97	3
			81–98	
			101–227	
6RS5HB57	3300	373890877	39–58	5
6SH7	3300	234710000	38–47	29
6SL7W			35–105	5
6SN7W	3300	234757000	17–12	15
6X4W			107–46	1
6X5GT	3300	234815000	17–11	12
6Y6G	3300	234820000	64–10	15
6015–P			102–158	3
			127–10	
			127–35	
606	3300	28678602	17–205	1
61–108			59–35	8
61F			101–44	4
62F			2–84	5
			3–85	
			4–87	
			5–	
			6–	
625527			33–11	111
			33–19	
			33–27	
			33–30	
			69–31B	
			73–31B	
625528			33–3	30
			33–7	
64F			101–48	1
669			8–	5
669–10			8–5	5
669–11			8–3	5
669–16			8–9	5
669–17			8–10	5
669A			8–	5
669A1			8–2	5
672			7–	5
672–10			7–14	5
672–11			71–15	1
672–12			7–8	5
672–13			7–7	5
672–14			7–4	10
672–15			7–9	5

PART NUMBER	STOCK NO. CODE	STOCK NO. SERIAL	FIG. & INDEX	TOTAL PER EQUIP
672–16			7–26	5
672–17			7–23	5
672–18			7–54	5
672–19			7–64	10
672–21			7–48	5
672–26			7–51	5
672–27			7–32	5
672–28			7–38	5
672–29			7–39	5
672–30			7–2	5
672–32			7–10	5
672–33			7–11	5
672–34			7–36	5
672–35			7–35	5
672–36			7–27	5
672–37			7–60	5
672–38			7–63	5
672–39			7–61	5
672–41			7–72	5
672–43			7–59	5
672–5			7–31	5
672–66			7–13	5
672–7			7–46	5
672–72			7–28	5
672–73			7–22	20
672–8			7–16	5
672–9			7–17	5
68F			2–85	5
			3–86	
			4–88	
			5–	
			6–	
684FN			101–43	4
7–33458			118–44	2
700286P1			75–4	4
701865			31–6	52
			42–6	
7034			31–12	26
			42–12	
7057	8800	216900	95–99	1
726–C			123–34	1
7403300	3300	296935130	28–277	10
			28–278	
7403301	3300	308034241	28–273	13
			28–276	
			40–7	
7403311	3300	298935137	40–3	4
			106–81	
7403316			105–95	1
7403403			66–231	2
			71–239	
7403406P1			71–341	1
7403407			66–337	2
			71–335	
7403408			66–338	1
7403529P2			2–371	2
			5–	
7475057			26–91	30
			26–92	
			26–93	
			26–94	
			26–95	
			26–96	
7475601	3300	296949043	68–42	1
7480421			66–73	2
			71–61	
7480437	3300	308034227	39–62	5
7480465	3300	296861690	17–50	7
			35–94	
			106–78	
7480469	3300	296861693	64–35	1
7480472	3300	296861695	78–14	1
7480475	3300	296861993	77–82	2
			105–92	
7480477	3300	296862346	27–20	5
7480478	3300	308034228	77–89	2
			105–91	
7481511			118–256	1
7481548	3300	296861688	76–23	2
			77–85	

PART NUMBER	STOCK NO. CODE	STOCK NO. SERIAL	FIG. & INDEX	TOTAL PER EQUIP
7481553	3300	296935133	68–27	2
			116–36	
7481554	3300	308034233	28–272	10
			68–24	
			105–98	
			105–99	
			116–26	
7481560	3300	296861687	81–101	2
			101–231	
7481599	3300	296935136	39–65	5
7482706	3300	298935138	2–215	5
			3–215	
			4–217	
			5–	
			6–	
7482707	3300	298935139	90–203	3
			90–207	
			90–208	
7482708	3300	296935563	90–207	1
7482709	3300	296935564	90–208	1
7482710	3300	308034237	90–162	1
7482711	3300	308034238	90–202	2
			90–204	
7482715	3300	308034239	17–54	1
7482717	3300	296935132	17–49	6
			28–275	
7483766	3300	296935135	28–274	8
			40–23	
760			107–32	48
761–1			43–11	3
77036X1EP–3			115–6	1
77666			115–42	1
7798			26–10	35
780			123–97	10
78147–03			115–32	2
78470			115–21	1
79344–01–1			115–30	1
79400			115–33	4
79661–11			115–50	1
79681			115–48	1
8–141			107–138	2
			107–139	
8–199			113–1	1
80042–1			28–79	5
801002–511	8800	529217	22–62	14
			35–19	
			63–101	
			75–13	
			77–29	
			77–34	
801002–512	8800	529178–5	22–60	13
			39–23	
			75–10	
			75–11	
			108–34	
801002–513	8800	529124–3	75–12	2
			108–32	
801002–514	8800	529130	75–9	2
			108–33	
801002–535			75–8	1
801006–511			17–106	8
			17–108	
			27–23	
			92–62	
801006–514			75–14	5
			75–15	
			75–16	
			75–17	
			75–18	
801006–517			65–57	7
			65–59	
			77–32	
			77–33	
			77–34	
			79–9	
			79–10	
8020			118–187	3
			118–189	
			118–190	
81543			115–51	1

PART NUMBER	STOCK NO. CODE	STOCK NO. SERIAL	FIG. & INDEX	TOTAL PER EQUIP
81545			115–46	1
81557			115–29	6
			115–36	
81562			115–25	1
820–12			101–91	1
820–24			101–67	2
820–36			101–68	1
83–1AC			95–88	1
83–1R	8850	667760	95–87	1
84598–02			115–	1
851587			118–202	1
8661			78–5	1
8698			32–20	41
			38–4	
			78–8	
8823–K2	4257	8823K2	95–101	1
895532–2			42–9	3
895538			31–7	13
			42–7	
895689			42–8	3
895707–1			31–8	10
895707–2			31–9	10
9024	8850	897072	28–89	5
905L			123–30	1
913587			31–13	20
91410–931			105–24	1
9175			66–123	2
			71–123	
926A	3300	287172860	38–40	27
			64–2	
			77–51	
			105–74	
			116–40	
926B	3300	291697089	28–248	25
			40–39	
			90–175	
			105–73	
926C	3300	287172845	38–39	116
			64–6	
			68–9	
			75–108	
			77–47	
			79–78	
			90–87	
			105–75	
			116–41	
926D	3300	287178404	32–60	99
			35–131	
			36–36	
			39–88	
			40–15	

PART NUMBER	STOCK NO. CODE	STOCK NO. SERIAL	FIG. & INDEX	TOTAL PER EQUIP
926D (Cont)			63–27	
			75–109	
			106–68	
			107–69	
			116–42	
			123–21	
926G	3300	286178405	66–91	8
			66–101	
			71–27	
			71–37	
926G-1			116–39	1
926M			107–68	3
926P	3300	287182741	17–40	14
			39–87	
			65–45	
			81–105	
			90–174	
9309			78–7	2
			78–10	
931587			42–13	6
945–6P			120–34	12
950–2			43–18	3
97–3057–10–6			2–448	5
			3–440	
			4–443	
			5–	
			6–	
9718122			2–375	10
			3–368	
			4–370	
			5–	
			6–	
9760–10			129–5	2
9760–12			2–466	5
			3–458	
			4–461	
			5–	
			6–	
9760–18			27–35	5
9760–22			2–468	5
			3–460	
			4–463	
			5–	
			6–	
9760–36			81–84	2
977–00–00–0127–05			95–98	1
982033			42–14	3
982556			31–3	52
			42–3	
9932			123–40	1